PCT WORLD INTELLECTUAL PROPERTY ORGANIZATION
International Bureau

9902430-9
IPOS copy

INTERNATIONAL APPLICATION PUBLISHED UNDER THE PATENT COOPERATION TREATY (PCT)

(51) International Patent Classification 6 : B01L 3/00, G01N 33/543

A1

(11) International Publication Number: **WO 98/15356**

(43) International Publication Date: 16 April 1998 (16.04.98)

(21) International Application Number: PCT/GB97/02708

(22) International Filing Date: 8 October 1997 (08.10.97)

(30) Priority Data:
9620934.1 8 October 1996 (08.10.96) GB

(71) Applicant *(for all designated States except US)*: MOLECULAR DRIVES LIMITED [GB/GB]; University of Glasgow, 2 The Square, Glasgow G12 8QQ (GB).

(72) Inventor; and

(75) Inventor/Applicant *(for US only)*: GORDON, John, Francis [GB/GB]; 5 Park Crescent, Torrance, Glasgow G64 4BH (GB).

(74) Agents: McCALLUM, William, Potter et al.; Cruikshank & Fairweather, 19 Royal Exchange Square, Glasgow G1 3AE (GB).

(81) Designated States: AL, AM, AT, AU, AZ, BA, BB, BG, BR, BY, CA, CH, CN, CU, CZ, DE, DK, EE, ES, FI, GB, GE, GH, HU, ID, IL, IS, JP, KE, KG, KP, KR, KZ, LC, LK, LR, LS, LT, LU, LV, MD, MG, MK, MN, MW, MX, NO, NZ, PL, PT, RO, RU, SD, SE, SG, SI, SK, SL, TJ, TM, TR, TT, UA, UG, US, UZ, VN, YU, ZW, ARIPO patent (GH, KE, LS, MW, SD, SZ, UG, ZW), Eurasian patent (AM, AZ, BY, KG, KZ, MD, RU, TJ, TM), European patent (AT, BE, CH, DE, DK, ES, FI, FR, GB, GR, IE, IT, LU, MC, NL, PT, SE), OAPI patent (BF, BJ, CF, CG, CI, CM, GA, GN, ML, MR, NE, SN, TD, TG).

Published

With international search report.

Before the expiration of the time limit for amending the claims and to be republished in the event of the receipt of amendments.

(54) Title: APPARATUS AND METHOD FOR CONDUCTING ASSAYS

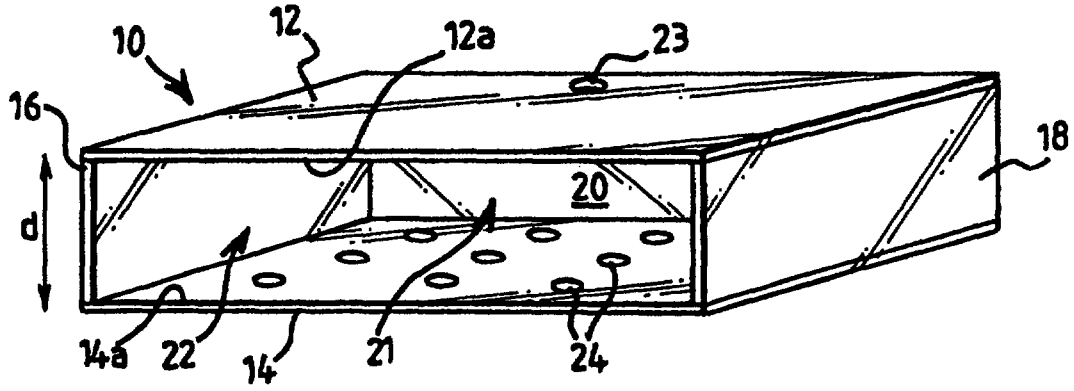

(57) Abstract

A multi–well assay plate structure (54) and assay apparatus and a method for performing chemical biochemical assays is described. The multi–well assay plate structure (54) defines a relatively shallow substantially enclosed space (71) above a plurality of wells (76), with the enclosed space (71) having an inlet (72) and an outlet (22) separate from the inlet. Fluid introduced via the inlet (72) flows into the space (71) and/or wells (76) by displacing air. Withdrawal of the fluid via the inlet (72) or outlet leaves fluid in the wells (76) allowing various tests to be performed. Various embodiments of the structure are described. The preferred arrangement embodies the structure on a transparent plastic disk which can be used with automatic fluid handling apparatus (80) and the results assessed using optical assessment apparatus (81). The apparatus can be used to perform a variety of assays but, in particular, biochemical/chemical assay, immunoassays and genetic (DNA) assays and it can be used in a laboratory for multiple sample testing or at a point–of–care, i.e. in a surgery or clinic.