(12) INTERNATIONAL APPLICATION PUBLISHED UNDER THE PATENT COOPERATION TREATY (PCT)

(19) World Intellectual Property Organization
International Bureau

(43) International Publication Date
30 August 2007 (30.08.2007)

PCT

(10) International Publication Number
WO 2007/097957 A3

(51) International Patent Classification:
B60R 21/215 (2006.01) *B60R 21/205* (2006.01)

(21) International Application Number:
PCT/US2007/003889

(22) International Filing Date:
14 February 2007 (14.02.2007)

(25) Filing Language: English

(26) Publication Language: English

(30) Priority Data:
60/774,068 16 February 2006 (16.02.2006) US
11/563,699 28 November 2006 (28.11.2006) US

(71) Applicant *(for all designated States except US)*: **GENERAL ELECTRIC COMPANY** [US/US]; (a New York Corporation), 1 River Road, Schenectady, NY 12345 (US).

(72) Inventors; and

(75) Inventors/Applicants *(for US only)*: **CHITTETI, Ravi, Kiran** [IN/IN]; #691, 3 Cross, 7 Main, Muninanjappa Layout, Doorvaninagar PO, Bangalore, Karnataka 560016 (IN). **NEMOTO, Takaaki** [JP/JP]; 624 Hagi, Mishima, Shizuoka, 411-0045 (JP). **RYU, Chang-Soo** [KR/KR]; 130-301 Parktown Apt., Sunae-Dong, Pundang-Ku, Sungnam, Kyungkee 463-020 (KR). **TRAPPE, Adam, K.** [US/US]; 9722 Springborn, Casco, MI 48064 (US). **WIECZOREK, Ted, J.** [US/US]; 470 Lexington, Rochester Hills, MI 48307 (US).

(74) Agents: **TOOP, Barbara, A.** et al.; General Electric Company, Global Patent Operation, 187 Danbury Road, Suite 204, Wilton, CT 06897 (US).

(81) Designated States *(unless otherwise indicated, for every kind of national protection available)*: AE, AG, AL, AM, AT, AU, AZ, BA, BB, BG, BR, BW, BY, BZ, CA, CH, CN, CO, CR, CU, CZ, DE, DK, DM, DZ, EC, EE, EG, ES, FI, GB, GD, GE, GH, GM, GT, HN, HR, HU, ID, IL, IN, IS, JP, KE, KG, KM, KN, KP, KR, KZ, LA, LC, LK, LR, LS, LT, LU, LV, LY, MA, MD, MG, MK, MN, MW, MX, MY, MZ, NA, NG, NI, NO, NZ, OM, PG, PH, PL, PT, RO, RS, RU, SC, SD, SE, SG, SK, SL, SM, SV, SY, TJ, TM, TN, TR, TT, TZ, UA, UG, US, UZ, VC, VN, ZA, ZM, ZW.

(84) Designated States *(unless otherwise indicated, for every kind of regional protection available)*: ARIPO (BW, GH, GM, KE, LS, MW, MZ, NA, SD, SL, SZ, TZ, UG, ZM, ZW), Eurasian (AM, AZ, BY, KG, KZ, MD, RU, TJ, TM), European (AT, BE, BG, CH, CY, CZ, DE, DK, EE, ES, FI, FR, GB, GR, HU, IE, IS, IT, LT, LU, LV, MC, NL, PL, PT, RO, SE, SI, SK, TR), OAPI (BF, BJ, CF, CG, CI, CM, GA, GN, GQ, GW, ML, MR, NE, SN, TD, TG).

Declarations under Rule 4.17:

— *as to applicant's entitlement to apply for and be granted a patent (Rule 4.17(ii))*

— *as to the applicant's entitlement to claim the priority of the earlier application (Rule 4.17(iii))*

[Continued on next page]

(54) **Title:** VEHICLE INSTRUMENT PANEL WITH HIDDEN AIRBAG DOOR AND INTEGRATED AIRBAG CHUTE

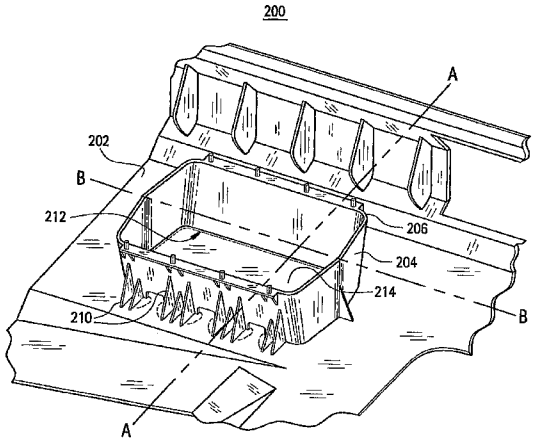

(57) **Abstract:** A motor vehicle structure that includes a hidden airbag door (214) and an integrated airbag chute (204). The structure may be selected from instrument panel assemblies, seat shields, airbag covers, pillar garnishes, side curtain shields, door trim, knee bolsters, or a combination of one or more of the foregoing structures. The structure is designed to include a retainer (202) having a first surface and a second surface, a deployment chute (204), and a door portion (214) defined by a tear seam notch (212) in at least one of the first surface and the second surface of the retainer (202). The deployment chute (204) is attached to and integrated with the retainer (202). Additionally, the deployment chute (204) and the retainer (202) are constructed and arranged from the same material. The motor vehicle structure may be made by integrally forming the deployment chute (204) with the retainer (202) and defining a door portion (214) using a tear seam notch (212) in at least one of the first surface and the second surface of the retainer (202). The motor vehicle structures of the present invention require fewer process steps to make and may have increased structural strength as compared to prior art structures.

WO 2007/097957 A3

Published:

— *with international search report*

— *before the expiration of the time limit for amending the claims and to be republished in the event of receipt of amendments*

(88) Date of publication of the international search report:
11 October 2007

For two-letter codes and other abbreviations, refer to the "Guidance Notes on Codes and Abbreviations" appearing at the beginning of each regular issue of the PCT Gazette.