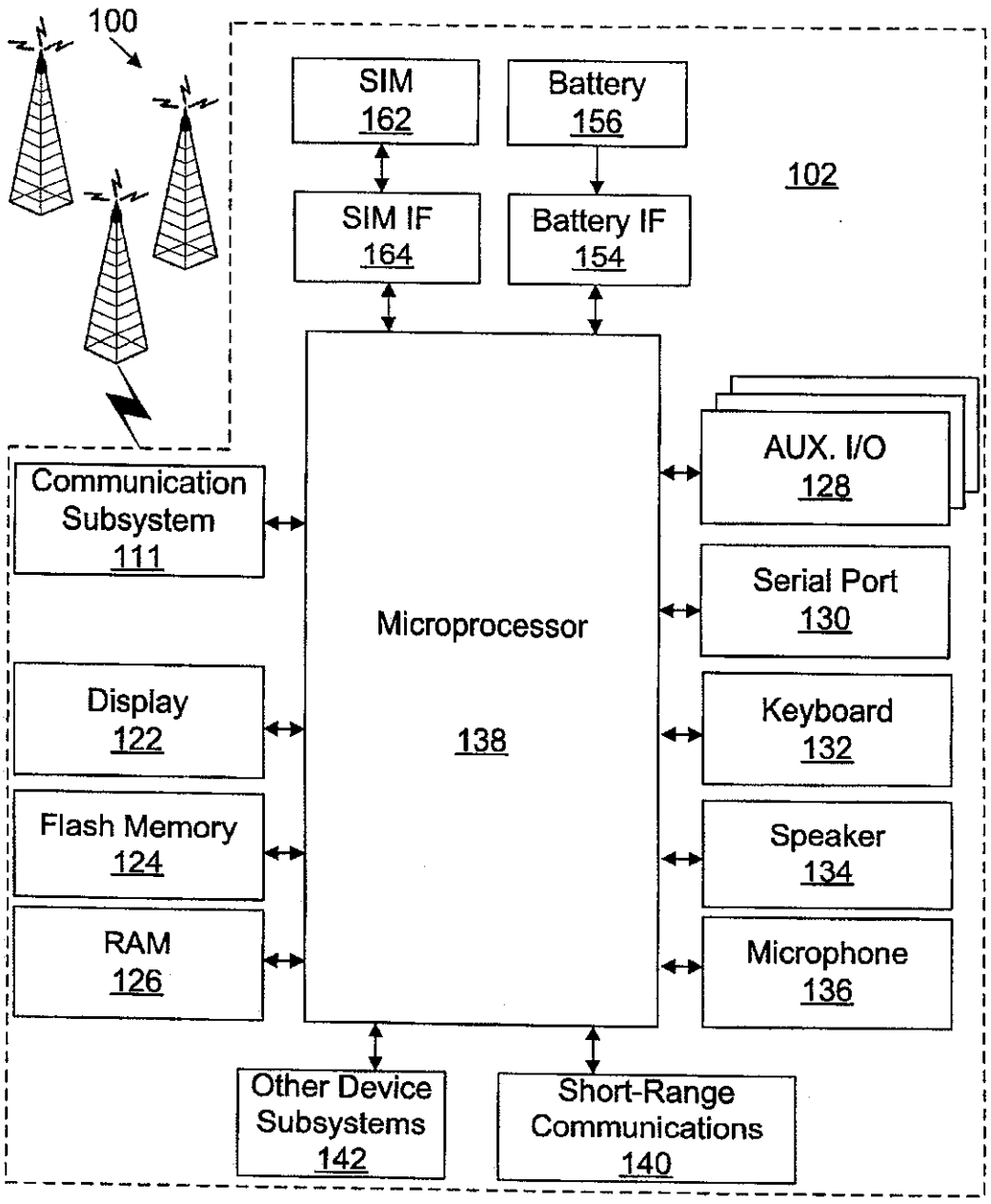
100
SIM
162
Battery
156
102
SIM IF
164
Battery IF
154
AUX. I/O
128
Communication
Subsystem
111
Microprocessor
138
Serial Port
130
Display
122
Keyboard
132
Flash Memory
124
Speaker
134
RAM
126
Microphone
136
Other Device
Subsystems
142
Short-Range
Communications
140

FIG. 1

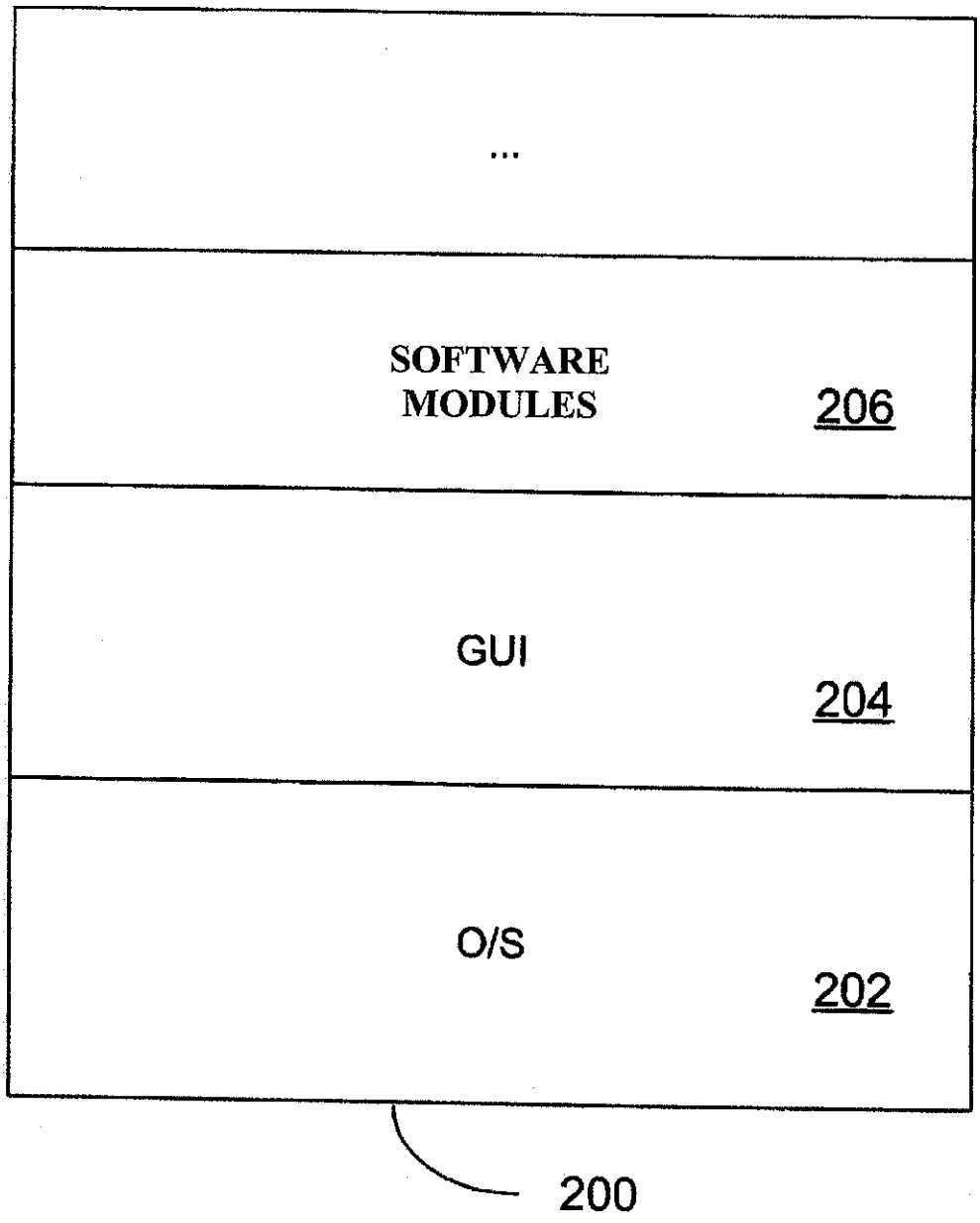

FIG. 2

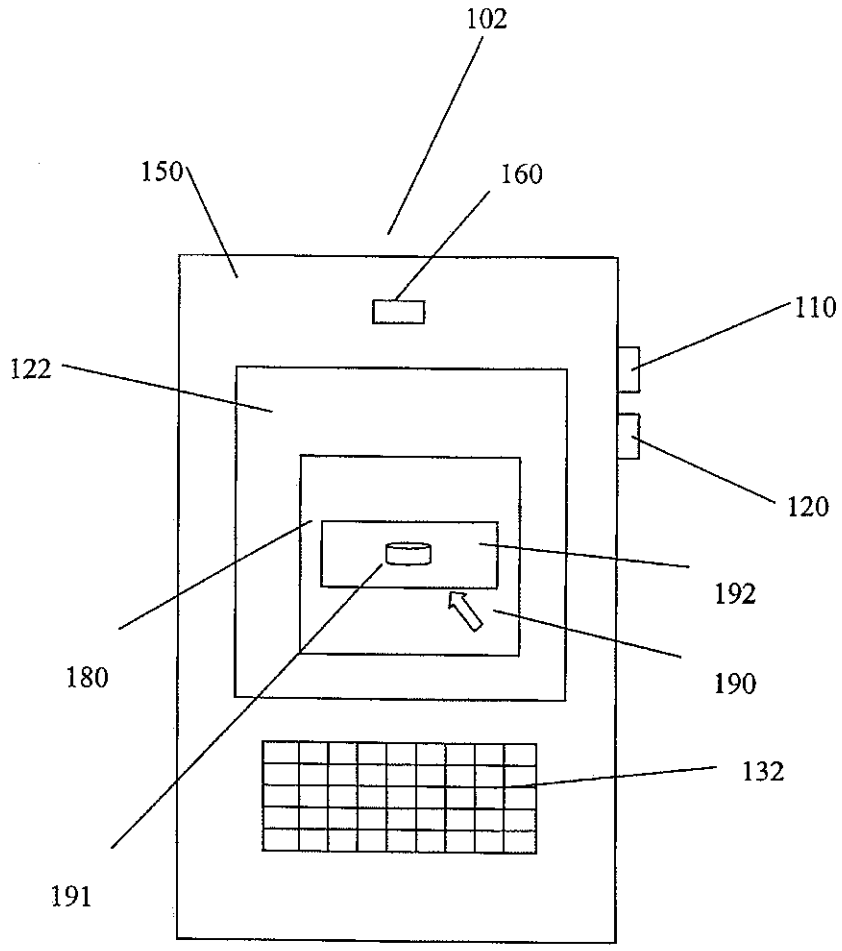

FIG. 3

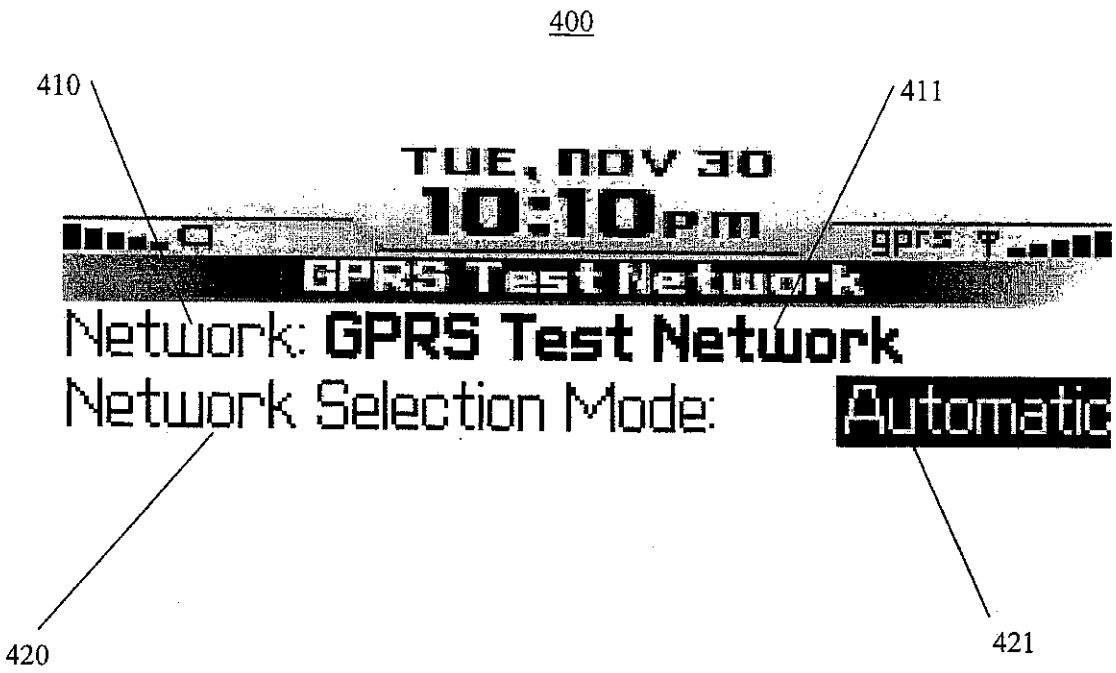
400
410
411
TUE, NOV 30
10:10 PM
GPRS Test Network
Network: GPRS Test Network
Network Selection Mode:
Automatic
420
421

FIG. 4

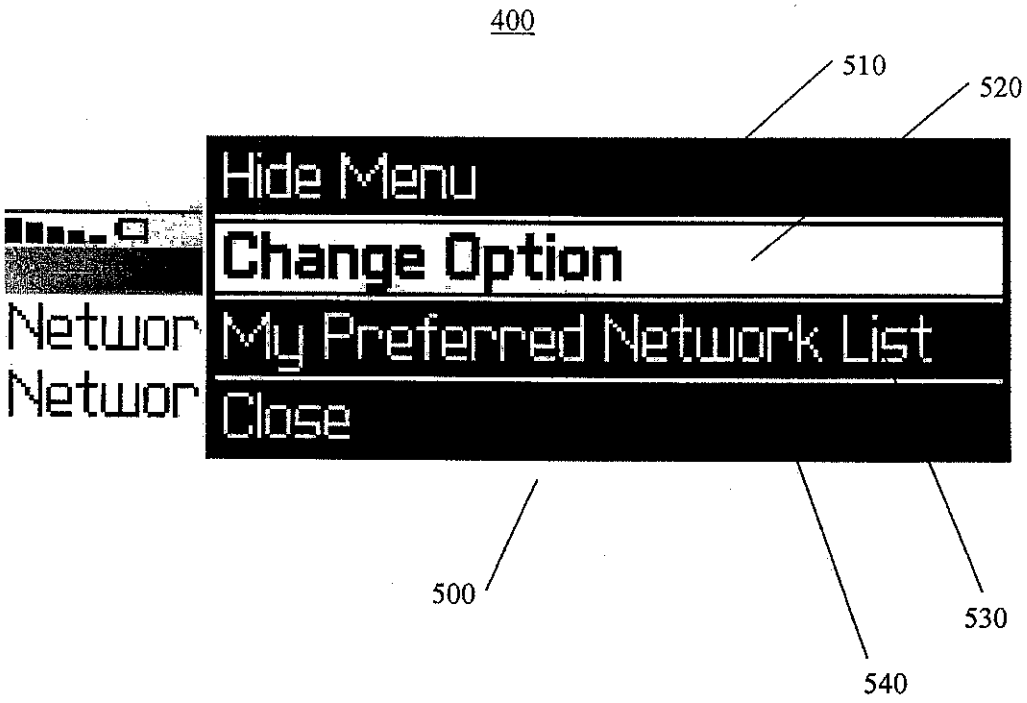
400
510
520
Hide Menu
Change Option
My Preferred Network List
Close
Networ
Networ
500
530
540

FIG. 5

400

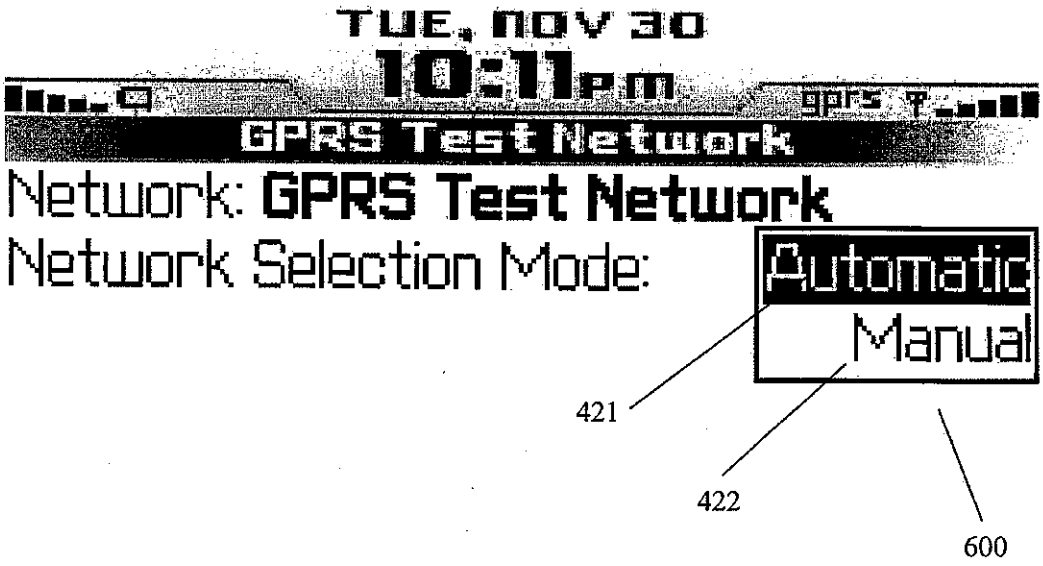
TUE, NOV 30
10:11PM
GPRS Test Network
Network: GPRS Test Network
Network Selection Mode:
Automatic
Manual
421
422
600

FIG. 6

400

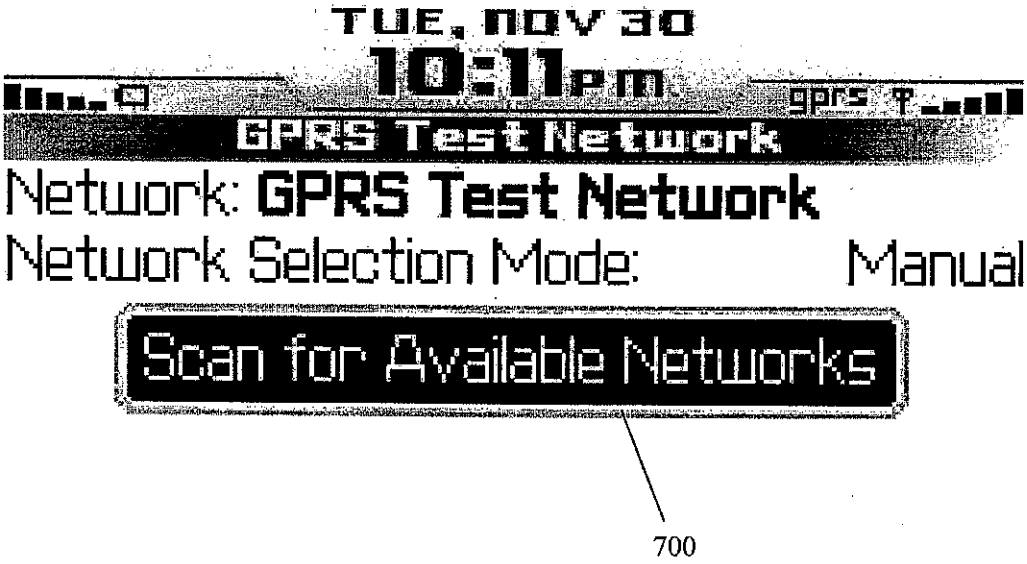
TUE, NOV 30
10:11pm
GPRS Test Network
Network: GPRS Test Network
Network Selection Mode: Manual
Scan for Available Networks
700

FIG. 7

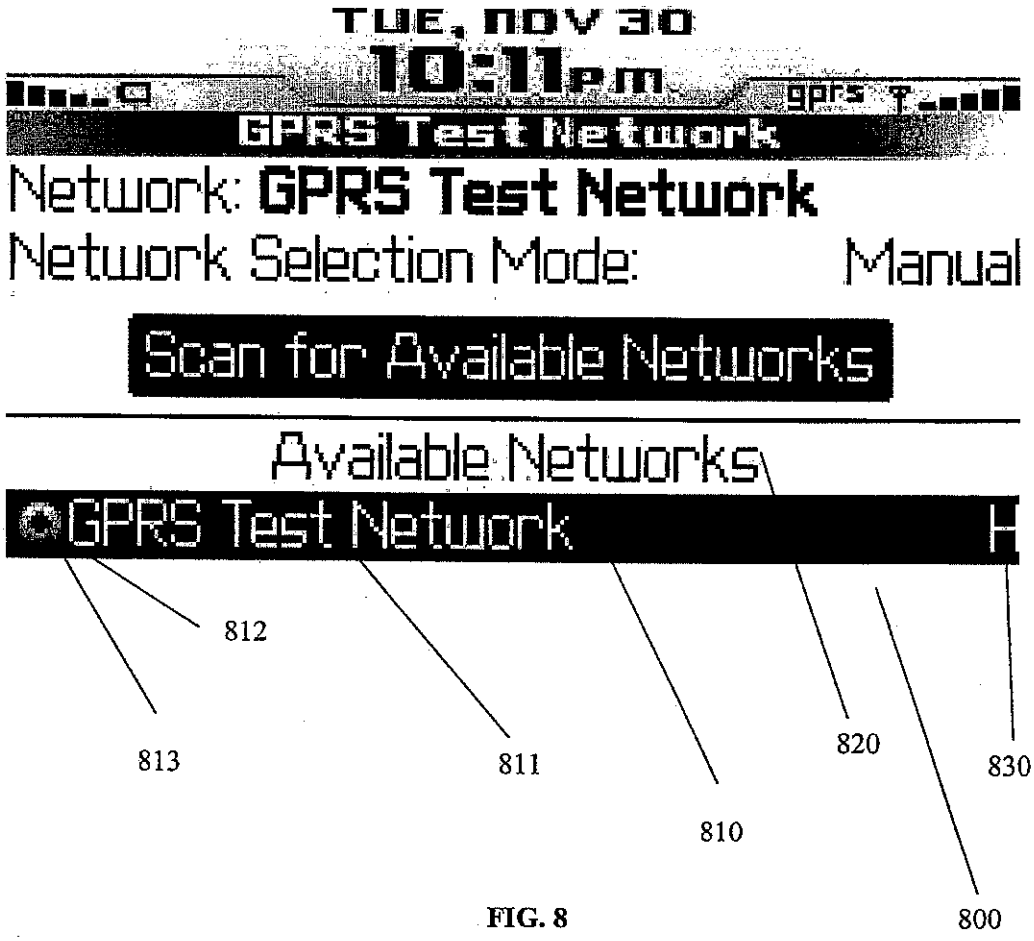
TUE, NOV 30
10:11pm
GPRS Test Network
Network: GPRS Test Network
Network Selection Mode: Manual
Scan for Available Networks
Available Networks
GPRS Test Network
812
813
811
810
820
830
800

FIG. 8

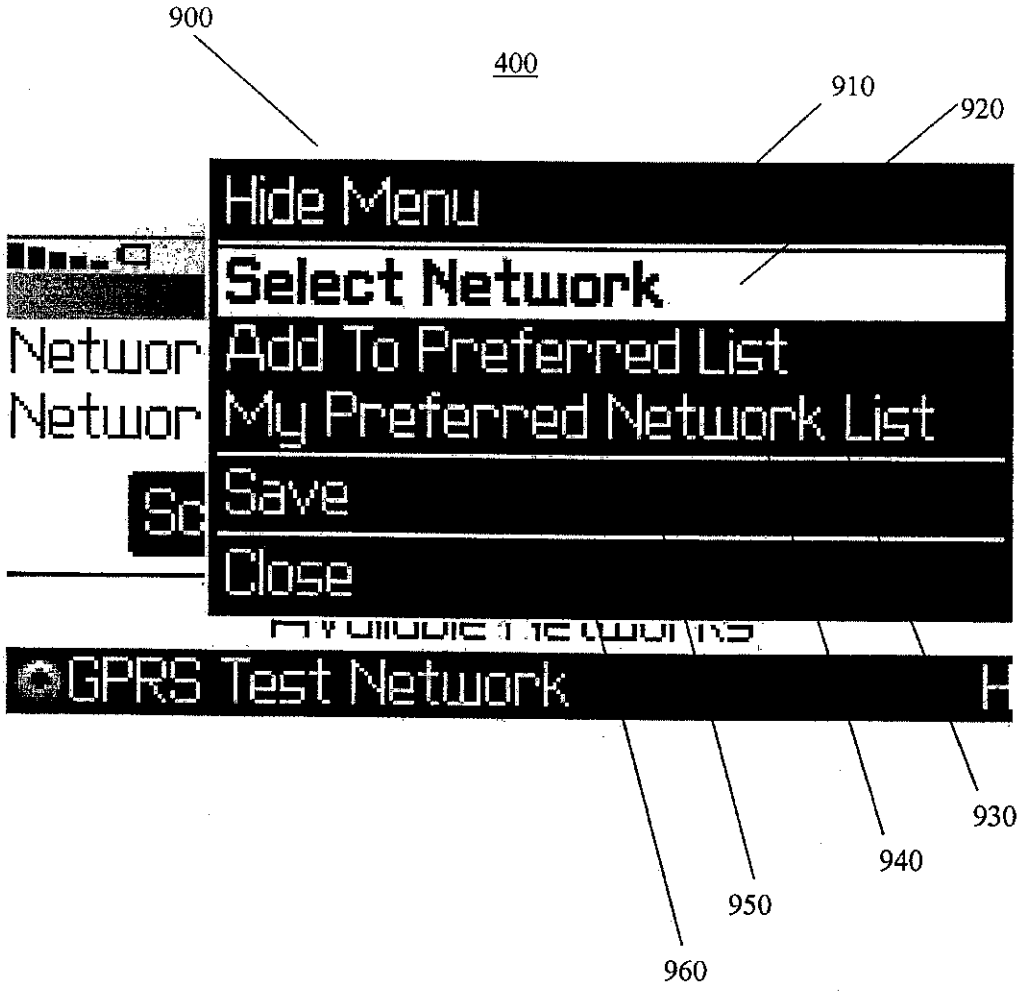
900
400
910
920
Hide Menu
Select Network
Add To Preferred List
My Preferred Network List
Save
Close
GPRS Test Network
930
940
950
960

FIG. 9

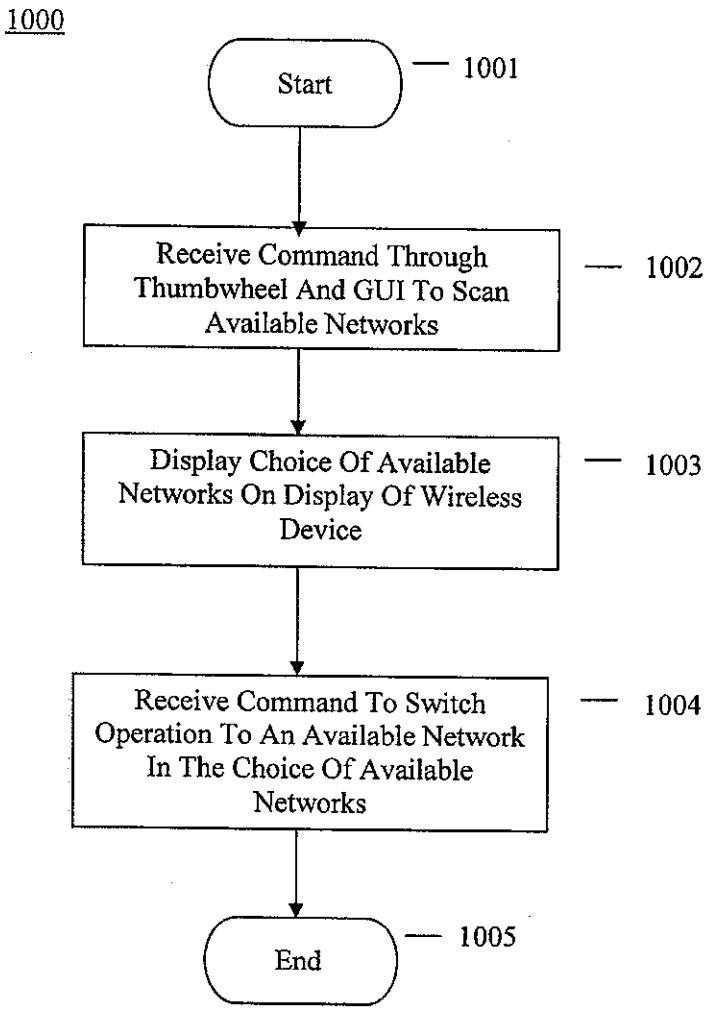
1000
Start
1001
Receive Command Through Thumbwheel And GUI To Scan Available Networks
1002
Display Choice Of Available Networks On Display Of Wireless Device
1003
Receive Command To Switch Operation To An Available Network In The Choice Of Available Networks
1004
End
1005

FIG. 10