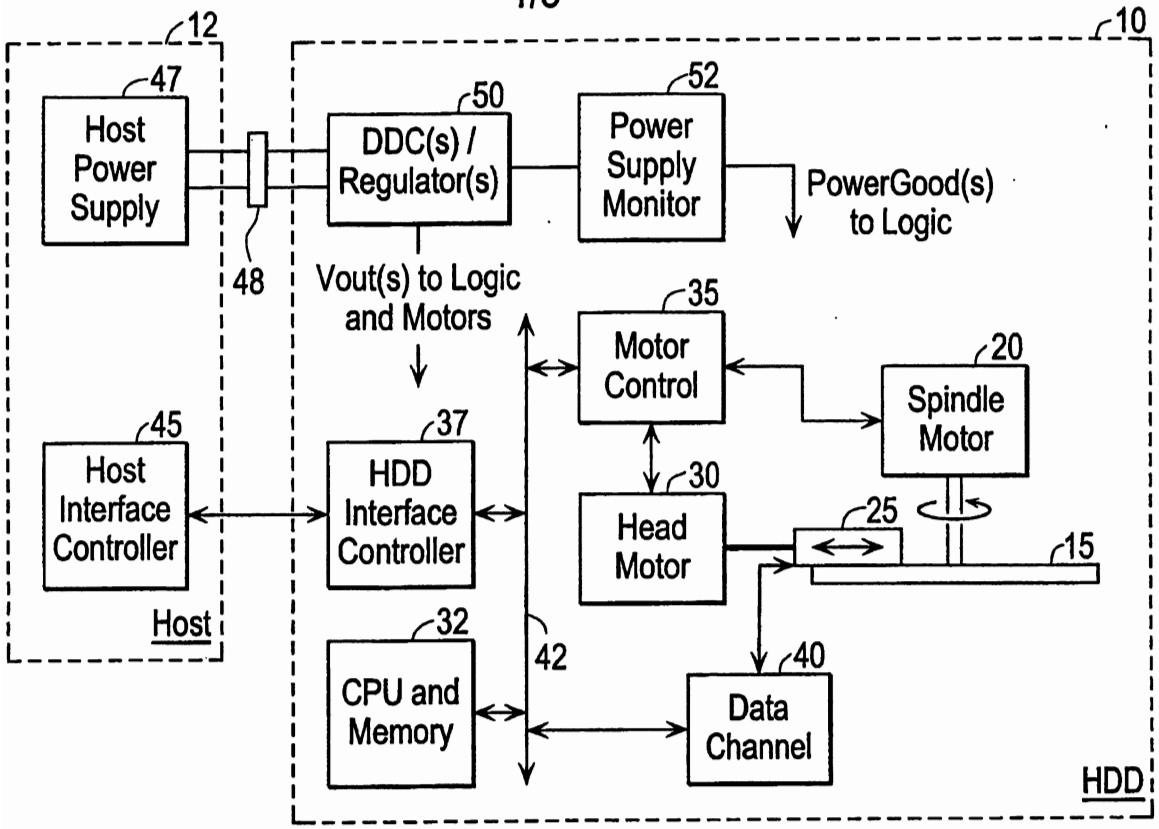

FIG. 1A (Prior Art)

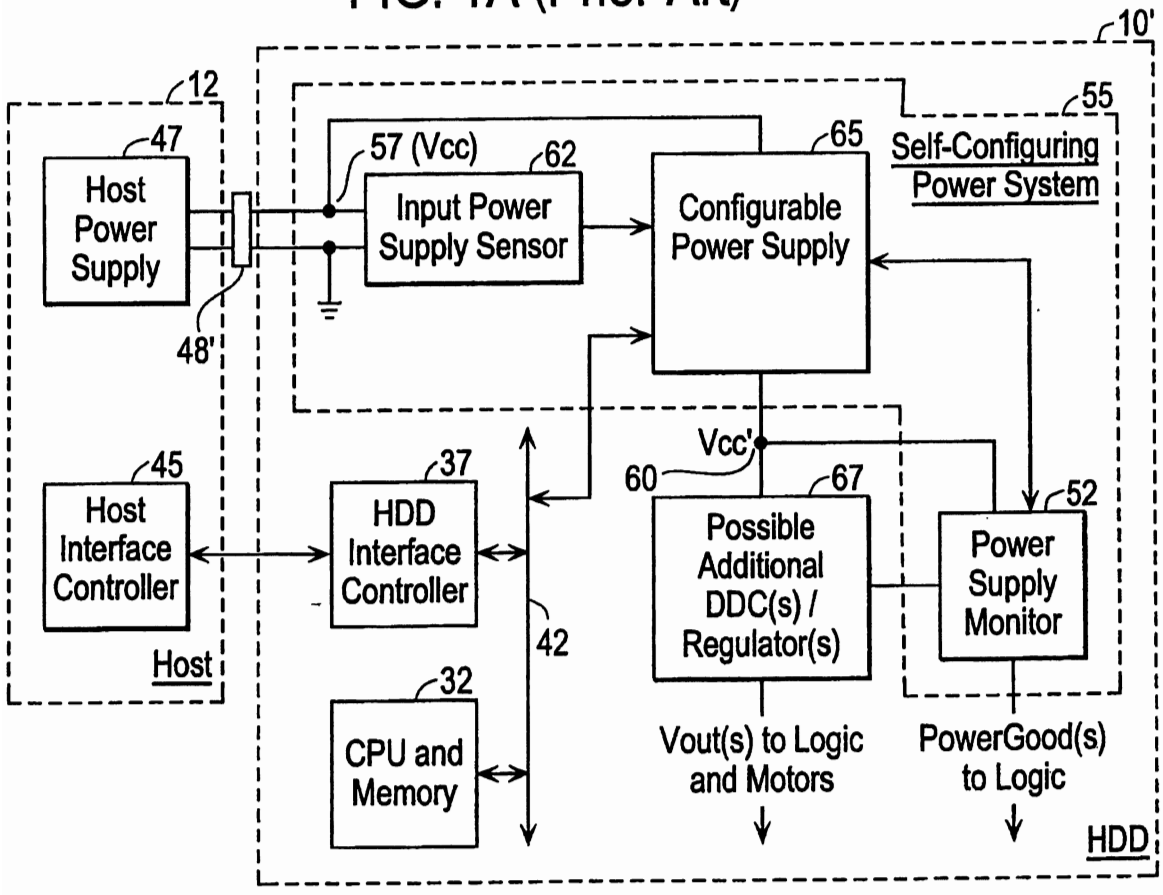

FIG. 2A

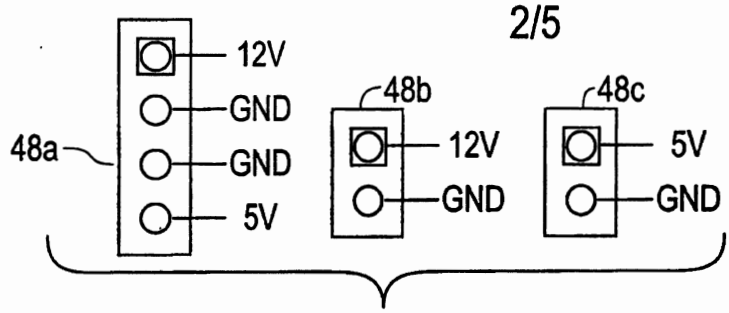

FIG. 1B (Prior Art)

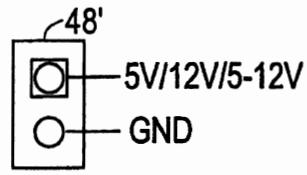

FIG. 2B

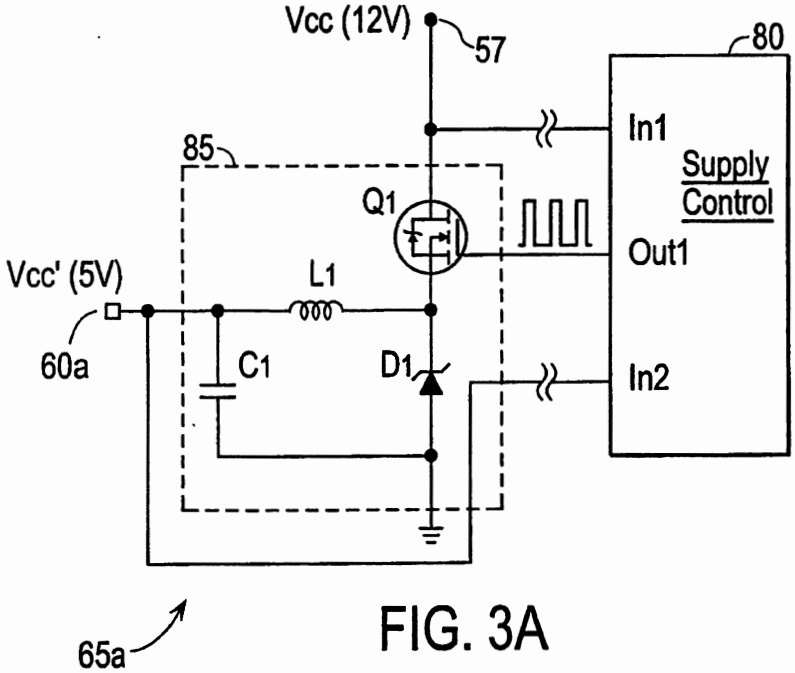

FIG. 3A

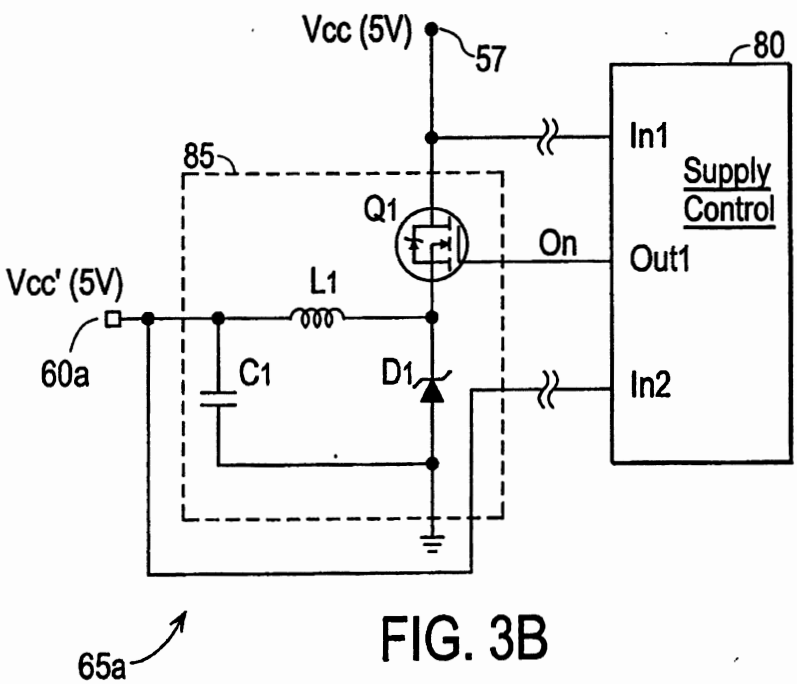

FIG. 3B

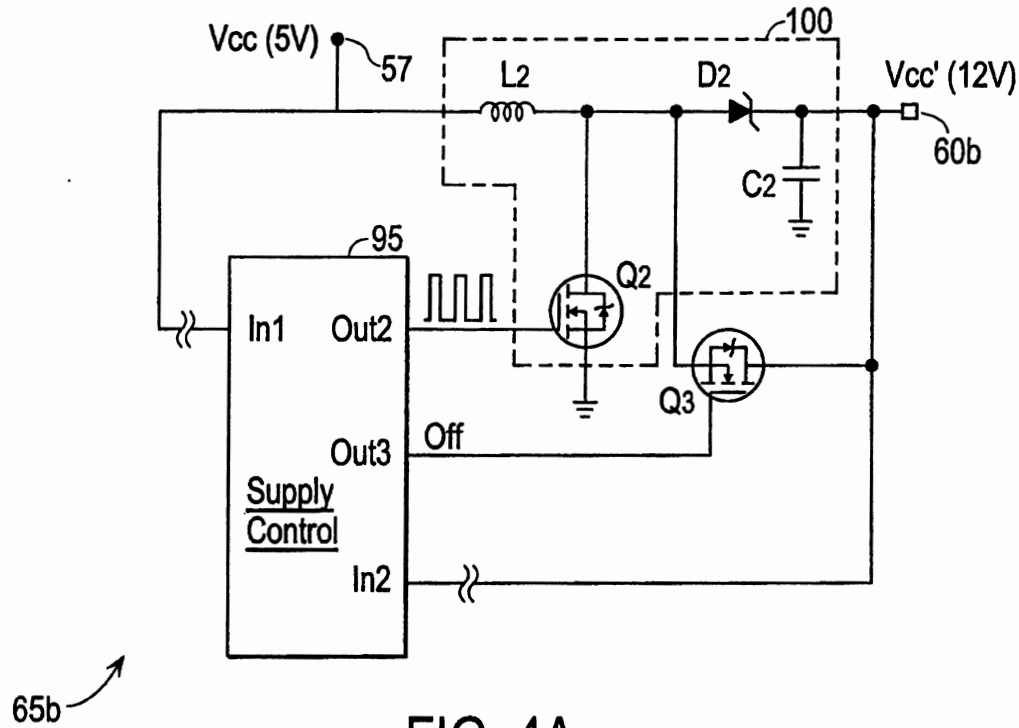
Vcc (5V)
57
100
L2
D2
Vcc' (12V)
60b
C2
95
Q2
In1
Out2
Q3
Off
Out3
Supply
Control
In2
65b

FIG. 4A

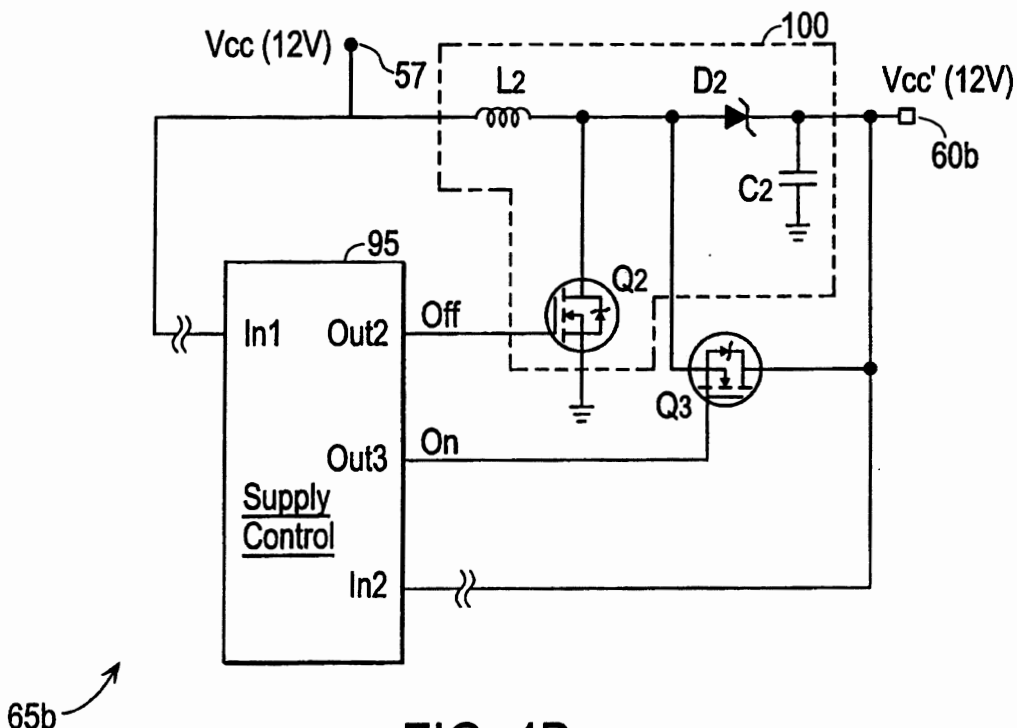
Vcc (12V)
57
100
L2
D2
Vcc' (12V)
60b
C2
95
Q2
Off
In1
Out2
Q3
On
Out3
Supply
Control
In2
65b

FIG. 4B

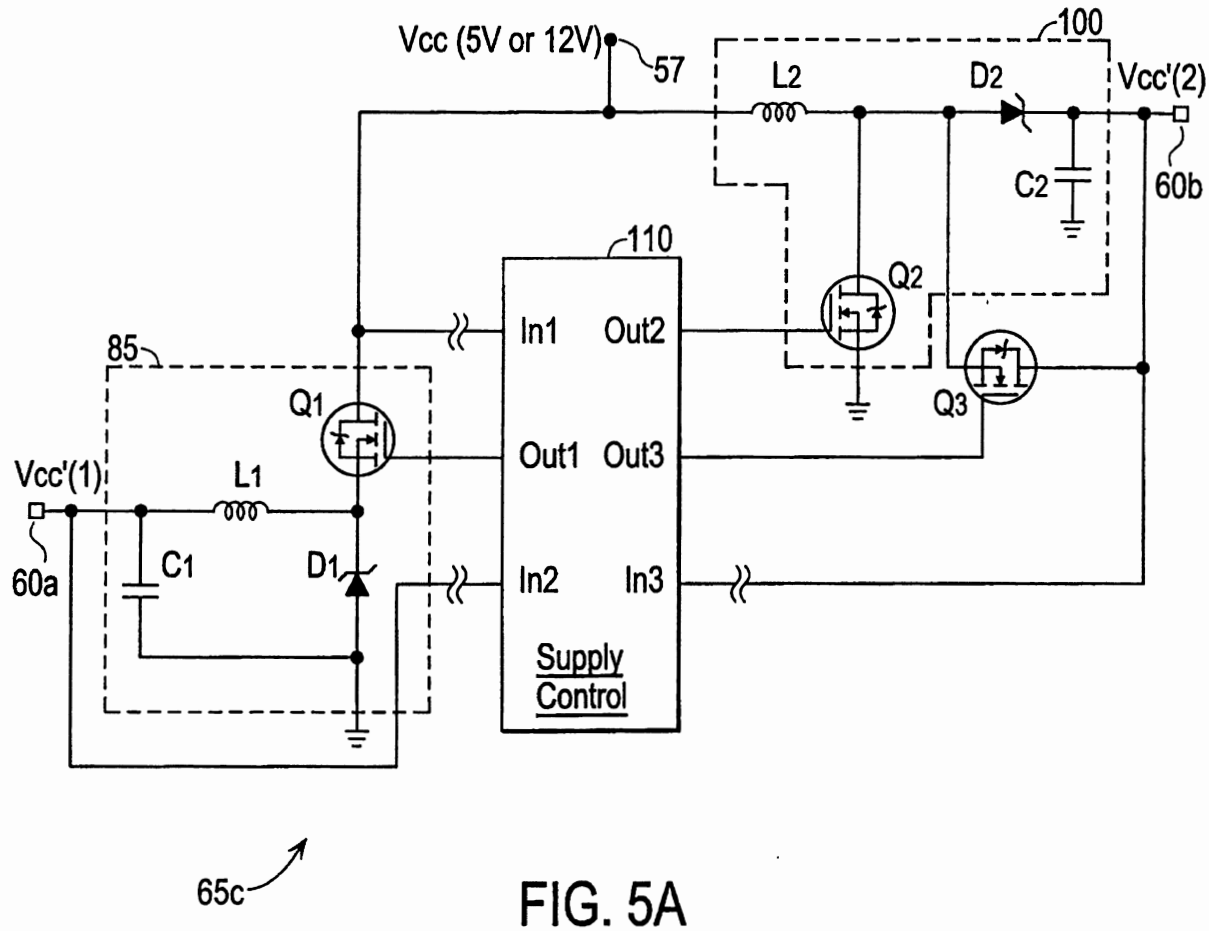

FIG. 5A

States of Output Signals Out1, Out2, and Out3 for Different Combinations of Vcc, Vcc'(1). and Vcc'(2)

Vcc	Vcc'(1)	Vcc'(2)	Out1	Out2	Out3
5V	5V	5V	On	Off	On
5V	5V	12V	On	Switch	Off
12V	12V	12V	On	Off	On
12V	5V	12V	Switch	Off	On

FIG. 5B

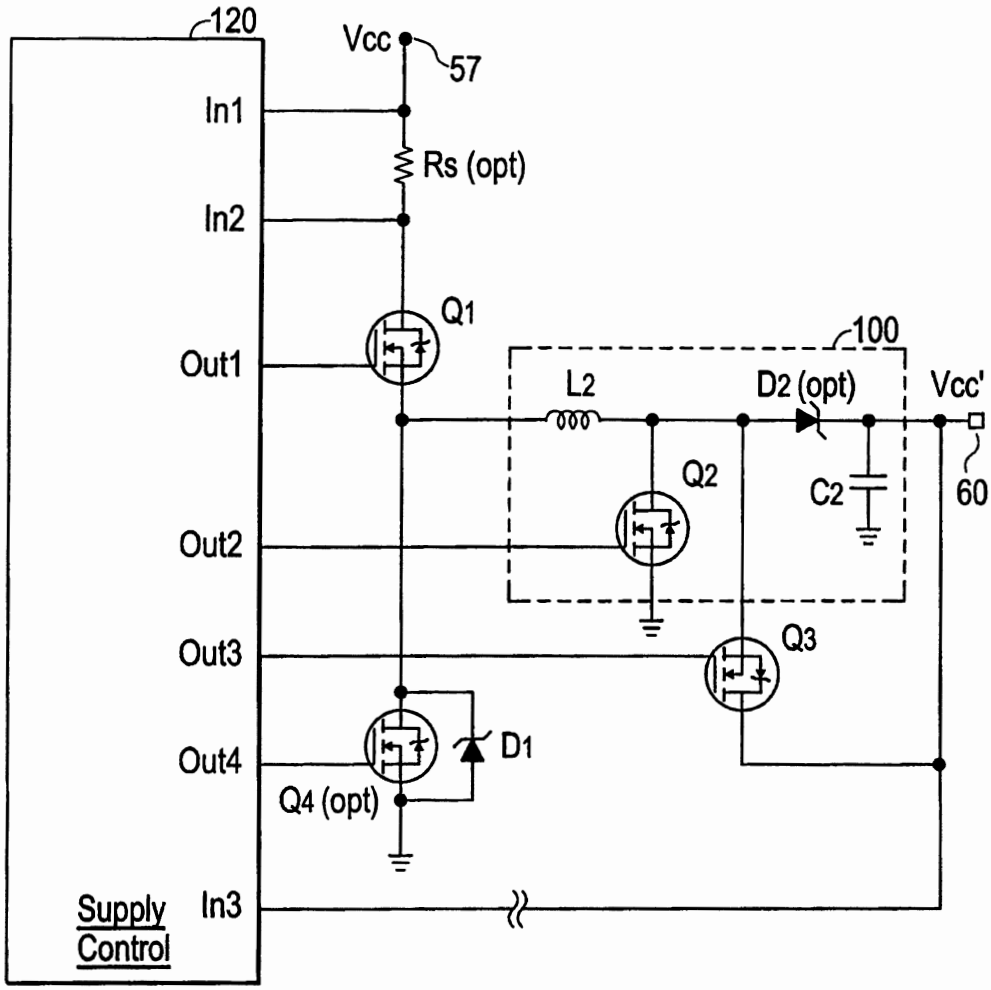

FIG. 6A

States of Output Signals Out1, Out2, Out3, and Out3 for Different Combinations of Vcc and Vcc'

Vcc	Vcc'	Out1	Out2	Out3	Out4
< Vcc'	> Vcc	On	Switch	Off/Switch	Off
= Vcc'	= Vcc	On	Off	On	Off
> Vcc'	< Vcc	Switch	Off	On	Off/Switch

FIG. 6B