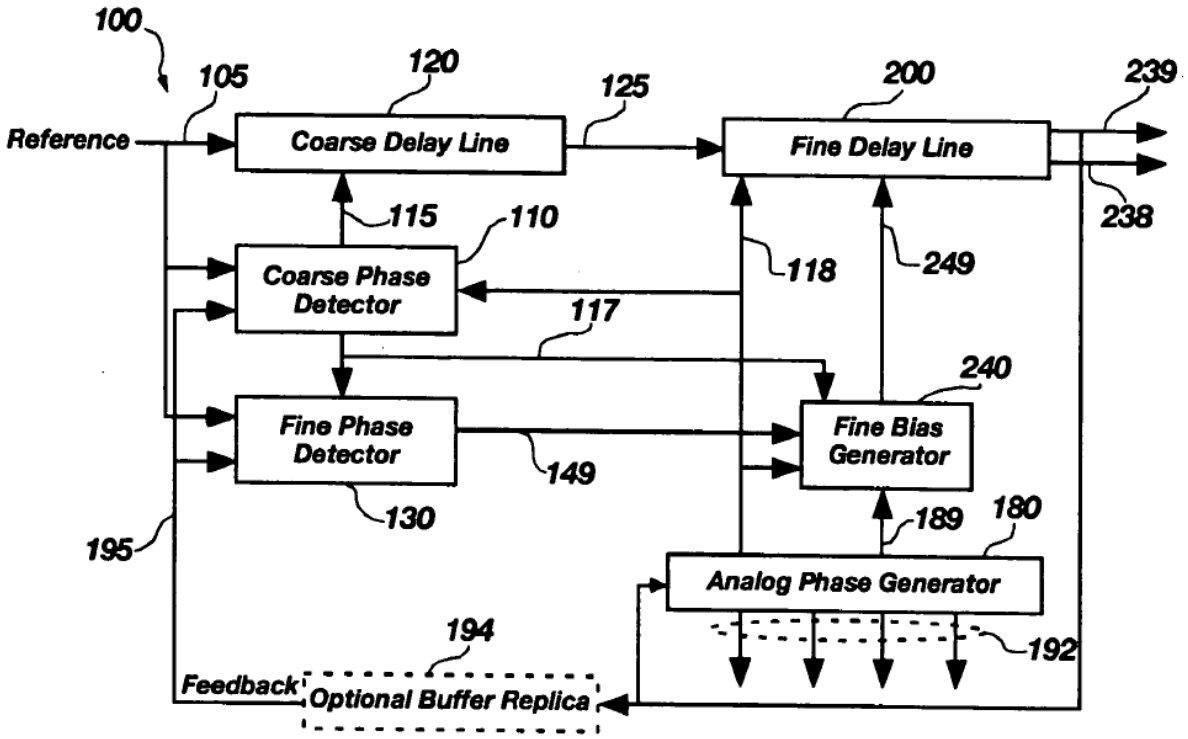
100
105
120
125
200
239
Reference
Coarse Delay Line
Fine Delay Line
238
115
110
118
249
Coarse Phase Detector
117
240
Fine Phase Detector
Fine Bias Generator
149
130
189
180
195
Analog Phase Generator
194
192
Feedback
Optional Buffer Replica

FIG. 1

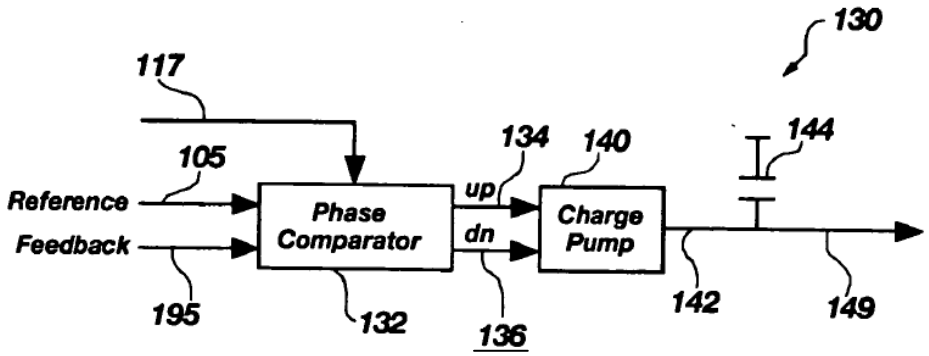
130
117
105
134
140
144
Reference
Feedback
Phase Comparator
up
dn
Charge Pump
195
132
136
142
149

FIG. 2