(12) INTERNATIONAL APPLICATION PUBLISHED UNDER THE PATENT COOPERATION TREATY (PCT)

(19) World Intellectual Property Organization
International Bureau

(43) International Publication Date
24 June 2010 (24.06.2010)

PCT

(10) International Publication Number
WO 2010/071886 A1

(51) International Patent Classification:
*E05C 9/02* (2006.01) *E05C 9/10* (2006.01)

(21) International Application Number:
PCT/US2009/069007

(22) International Filing Date:
21 December 2009 (21.12.2009)

(25) Filing Language: English

(26) Publication Language: English

(30) Priority Data:
61/139,127 19 December 2008 (19.12.2008) US

(71) Applicant *(for all designated States except US)*: **AMESBURY GROUP, INC.** [US/US]; 57 Hunt Road, Amesbury, MA 01913 (US).

(72) Inventors; and

(75) Inventors/Applicants *(for US only)*: **HAGEMEYER, Bruce** [US/US]; 124 Amsterdam, Pella, IA 50219 (US). **RAAP, Dan** [US/US]; 504 David Roe Drive, Hartford, SD 57033 (US). **TAGTOW, Gary, E.** [US/US]; 7508 West 32nd Street, Sioux Falls, SD 57106 (US). **LAMMERS, Tracy** [US/US]; 2500 South Camden Avenue, Sioux Falls, SD 57106 (US). **RICKENBAUCH, Allen** [US/US]; 4201 North Alaska Avenue, Sioux Falls, SD 57107 (US).

(74) Agents: **JAGENOW, Andrew, L.** et al.; Goodwin Procter LLP, Exchange Place, Boston, MA 02109 (US).

(81) Designated States *(unless otherwise indicated, for every kind of national protection available)*: AE, AG, AL, AM, AO, AT, AU, AZ, BA, BB, BG, BH, BR, BW, BY, BZ, CA, CH, CL, CN, CO, CR, CU, CZ, DE, DK, DM, DO, DZ, EC, EE, EG, ES, FI, GB, GD, GE, GH, GM, GT, HN, HR, HU, ID, IL, IN, IS, JP, KE, KG, KM, KN, KP, KR, KZ, LA, LC, LK, LR, LS, LT, LU, LY, MA, MD, ME, MG, MK, MN, MW, MX, MY, MZ, NA, NG, NI, NO, NZ, OM, PE, PG, PH, PL, PT, RO, RS, RU, SC, SD, SE, SG, SK, SL, SM, ST, SV, SY, TJ, TM, TN, TR, TT, TZ, UA, UG, US, UZ, VC, VN, ZA, ZM, ZW.

(84) Designated States *(unless otherwise indicated, for every kind of regional protection available)*: ARIPO (BW, GH,

*[Continued on next page]*

(54) Title: HIGH SECURITY LOCK FOR DOOR

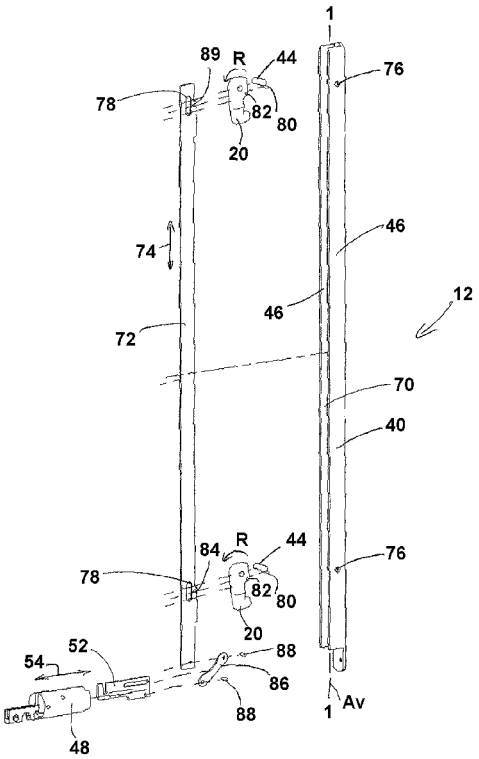


FIG. 3A

(57) Abstract: A high security locking system can be used in a conventional pivot door adapted for use with a latch and deadbolt lock combination. The high security system can be a multi-point lock, received in a recess formed in a locking edge side of a door stile, cooperating with a linkage or other mechanism in a conventional deadbolt/location. The lock can be actuated with a keyed cylinder and thumb turn combination.

WO 2010/071886 A1

GM, KE, LS, MW, MZ, NA, SD, SL, SZ, TZ, UG, ZM, ZW), Eurasian (AM, AZ, BY, KG, KZ, MD, RU, TJ, TM), European (AT, BE, BG, CH, CY, CZ, DE, DK, EE, ES, FI, FR, GB, GR, HR, HU, IE, IS, IT, LT, LU, LV, MC, MK, MT, NL, NO, PL, PT, RO, SE, SI, SK, SM, TR), OAPI (BF, BJ, CF, CG, CI, CM, GA, GN, GQ, GW, ML, MR, NE, SN, TD, TG).

**Published**:

— *with international search report (Art. 21(3))*