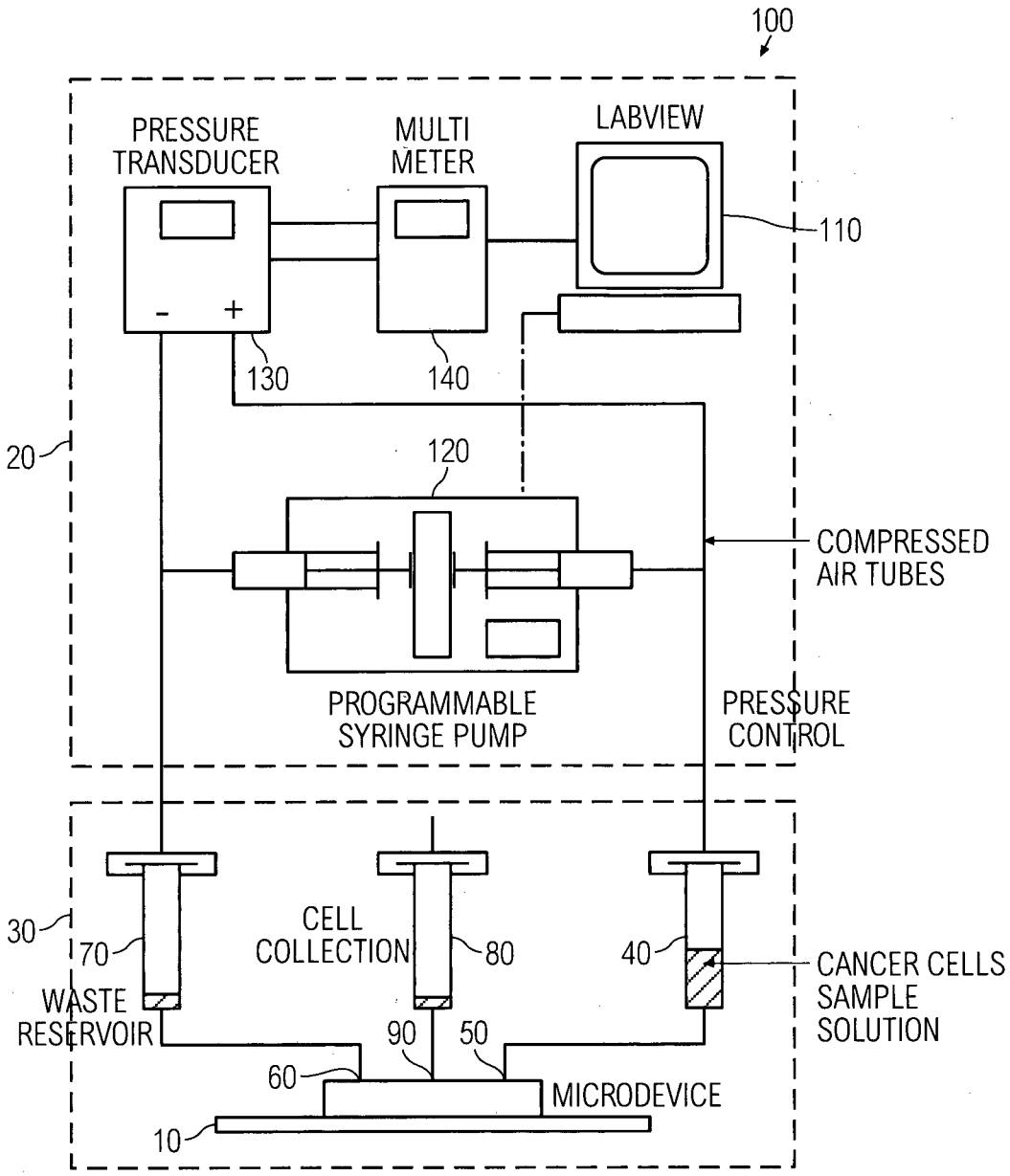
100
PRESSURE TRANSDUCER
MULTI METER
LABVIEW
110
-
+
130
140
20
120
COMPRESSED AIR TUBES
PROGRAMMABLE SYRINGE PUMP
PRESSURE CONTROL
30
70
CELL COLLECTION
80
40
CANCER CELLS SAMPLE SOLUTION
WASTE RESERVOIR
90
50
60
MICRODEVICE
10

FIG. 1

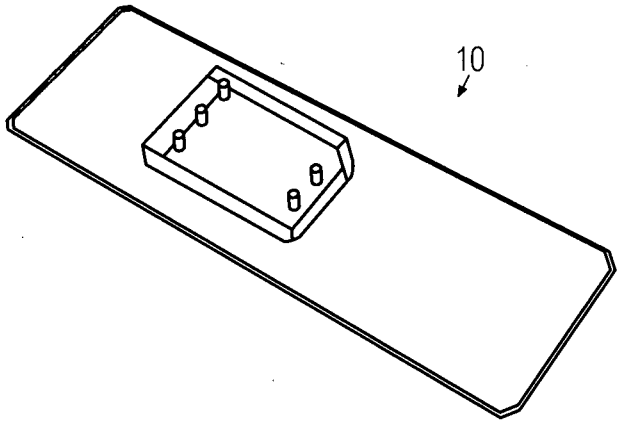

FIG. 2

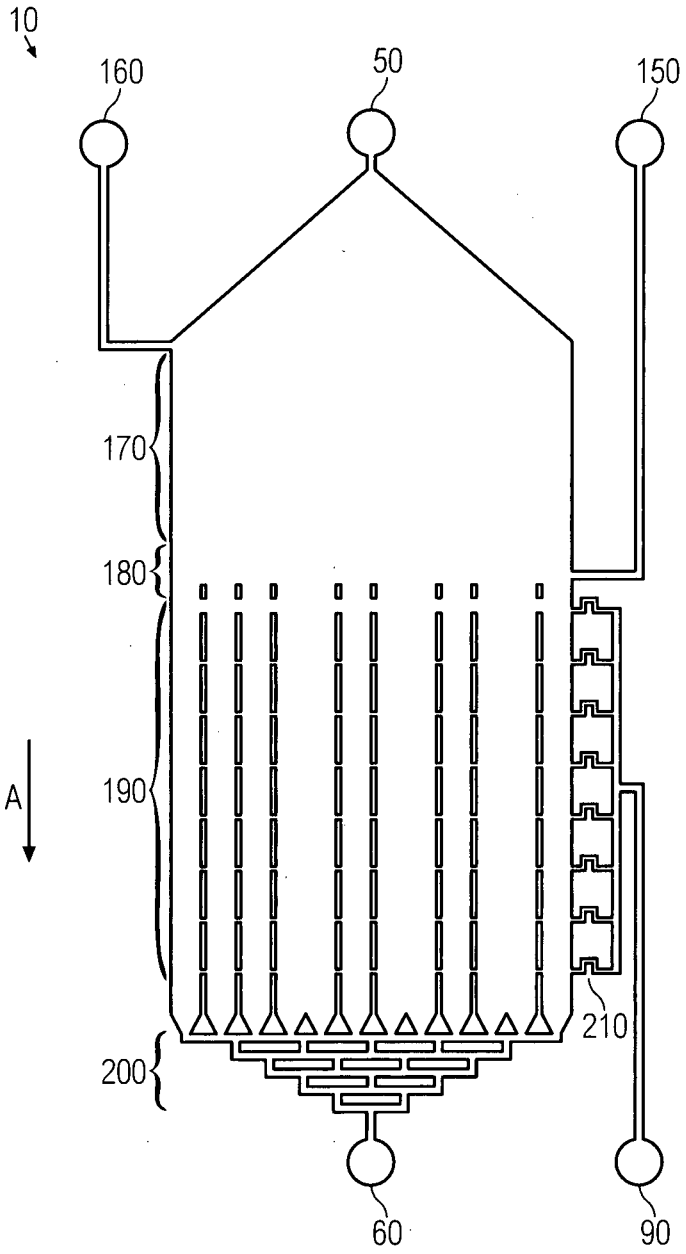

FIG. 3

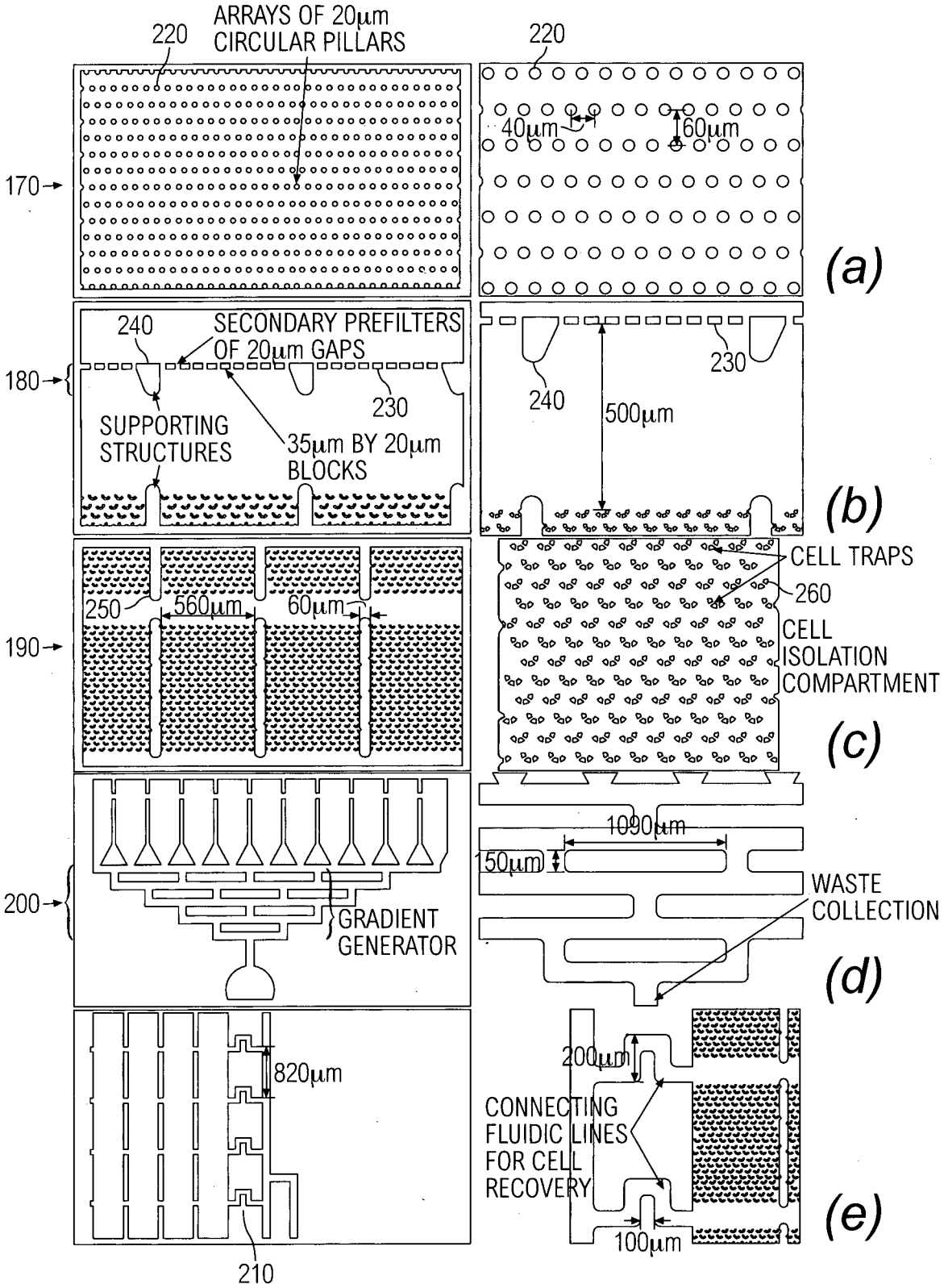
ARRAYS OF 20μm CIRCULAR PILLARS
220
220
170
40μm
60μm
(a)
240
SECONDARY PREFILTERS OF 20μm GAPS
180
230
240
500μm
230
SUPPORTING STRUCTURES
35μm BY 20μm BLOCKS
(b)
CELL TRAPS
250
560μm
60μm
260
190
CELL ISOLATION COMPARTMENT
(c)
1090μm
150μm
200
GRADIENT GENERATOR
WASTE COLLECTION
(d)
820μm
200μm
CONNECTING FLUIDIC LINES FOR CELL RECOVERY
100μm
(e)
210

FIG. 4

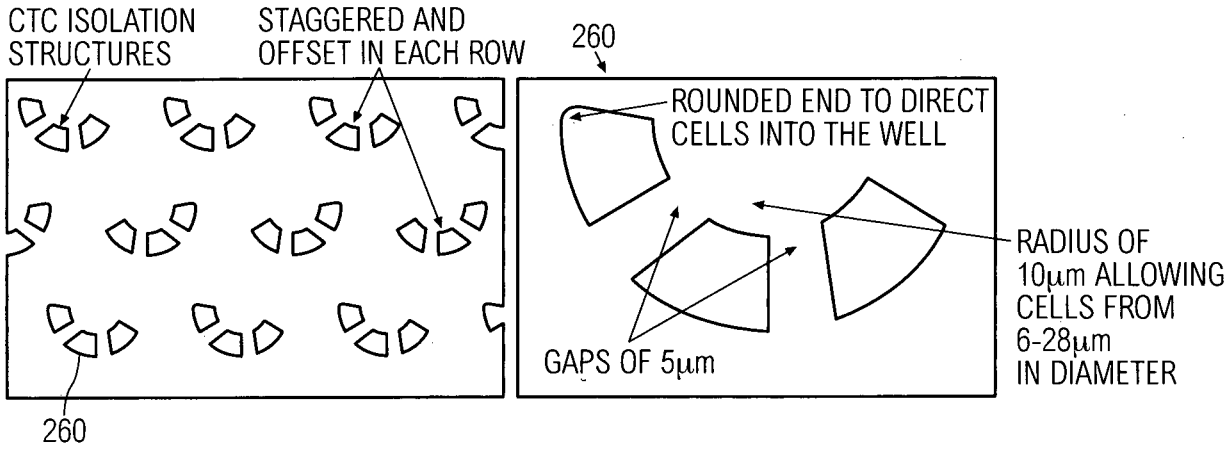
CTC ISOLATION STRUCTURES
STAGGERED AND OFFSET IN EACH ROW
260
ROUNDED END TO DIRECT CELLS INTO THE WELL
RADIUS OF 10μm ALLOWING CELLS FROM 6-28μm IN DIAMETER
GAPS OF 5μm
260

FIG. 5

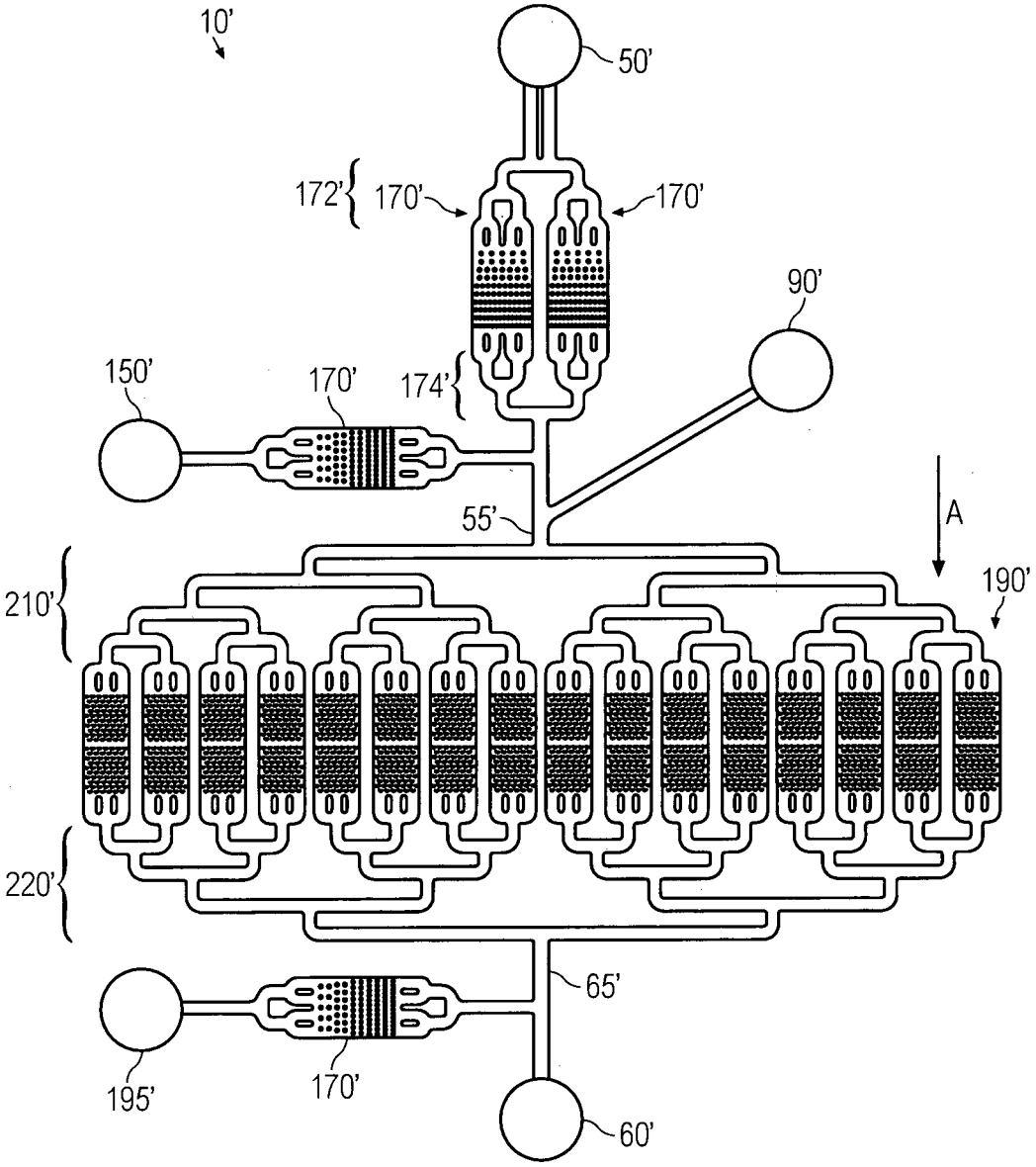

FIG. 6

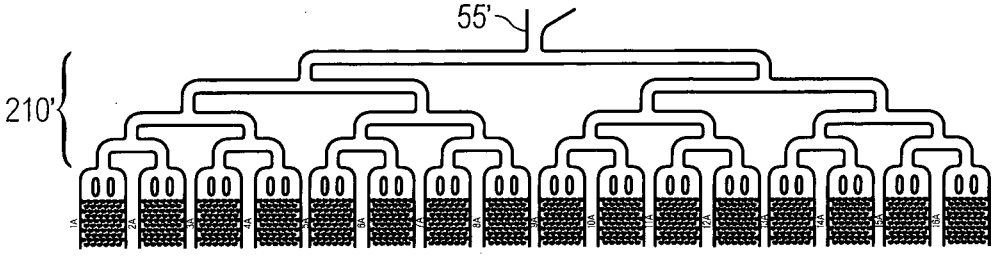

FIG. 7A

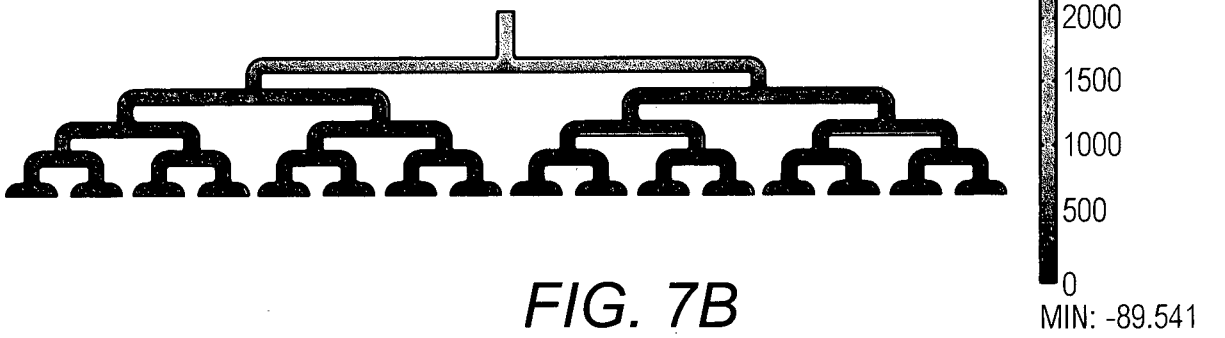

FIG. 7B

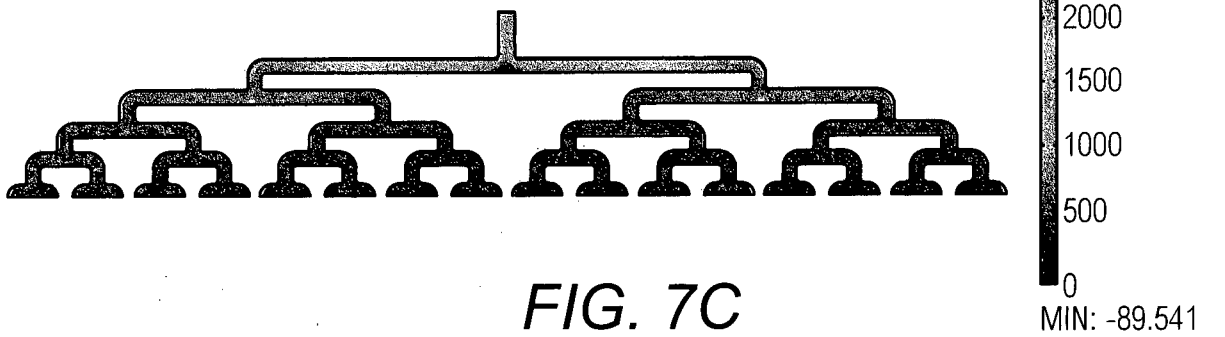

FIG. 7C

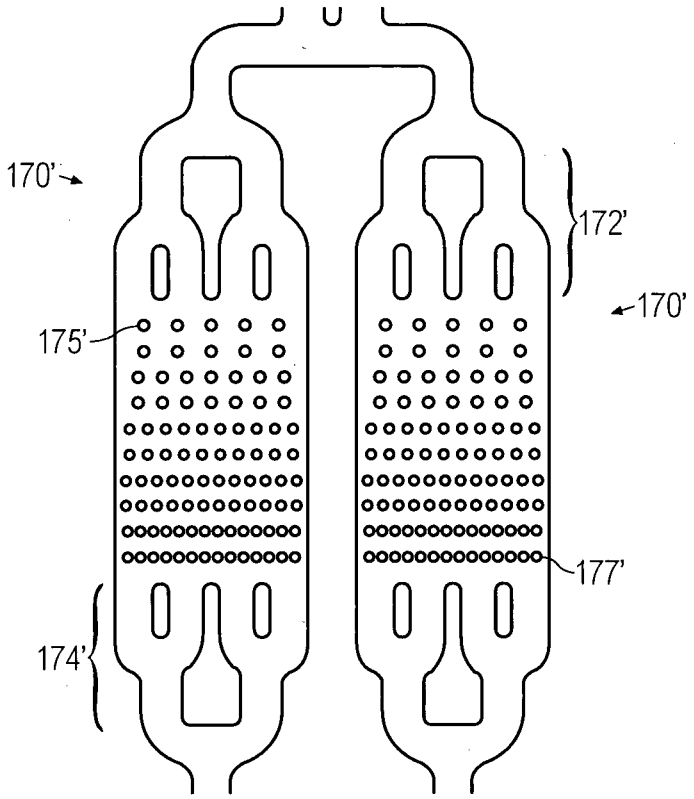

FIG. 8

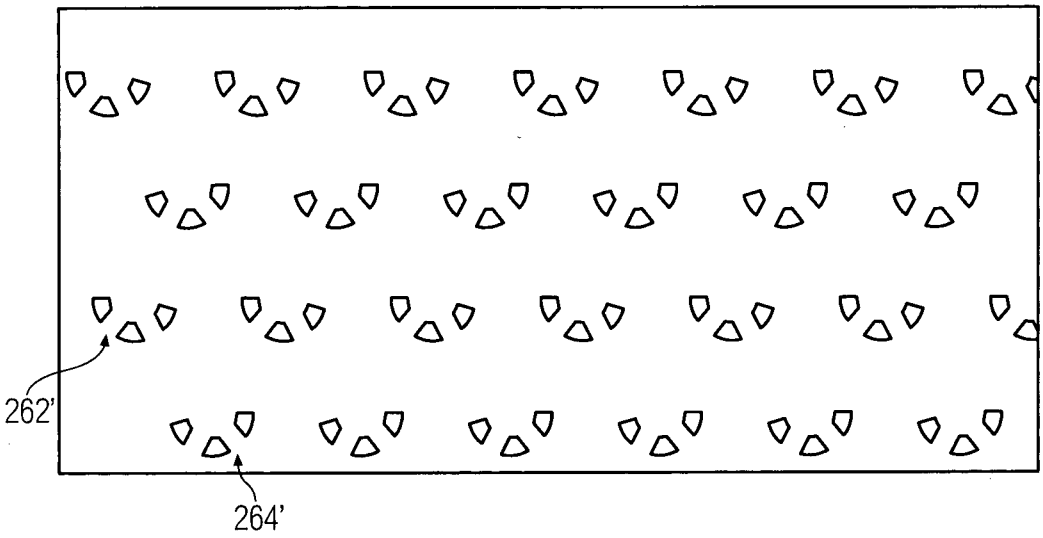

FIG. 9