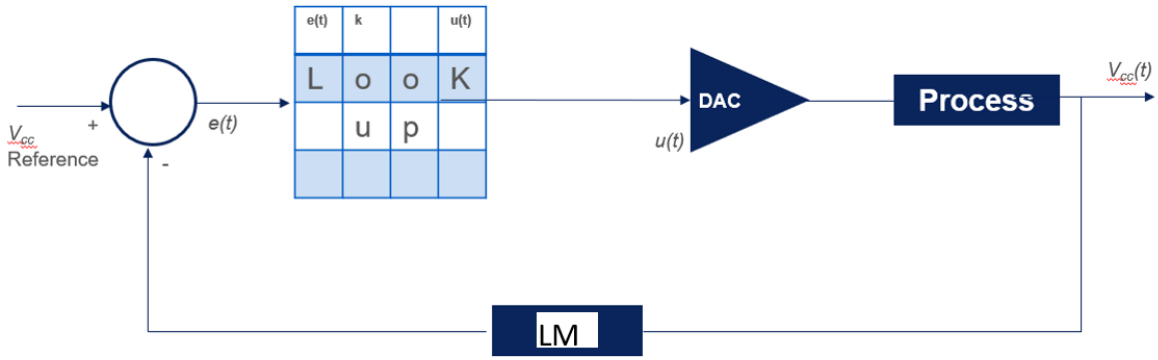

$$u(t) = f[e(t)]$$

Fig. 1

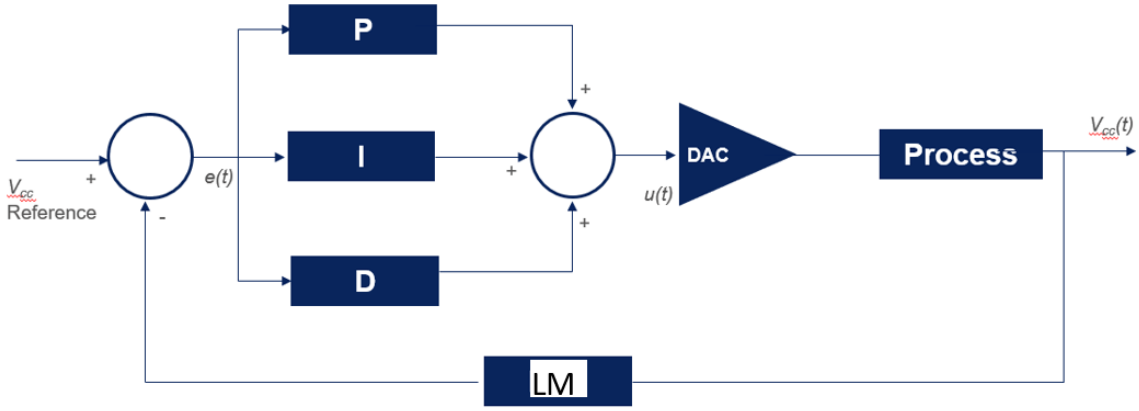

$$u(t) = (P + I + D) \times e(t)$$

$$u(t) = K_p \times e(t) + K_i \int e(\tau)d\tau + K_d \frac{de(t)}{dt}$$

Fig. 2

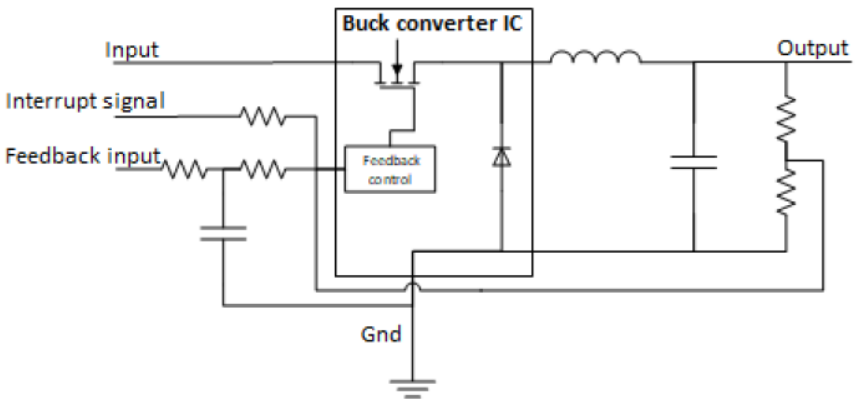

Fig. 3

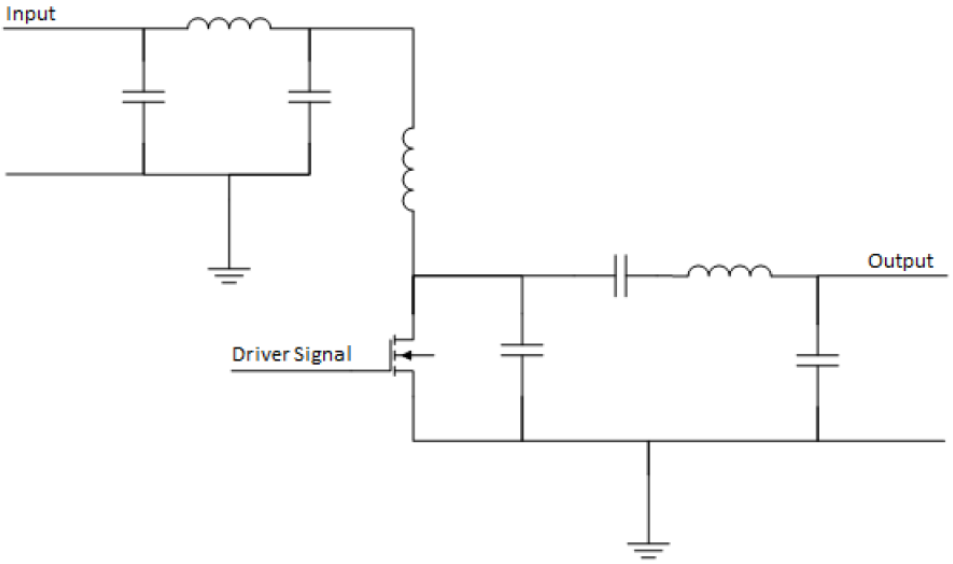

Fig. 4

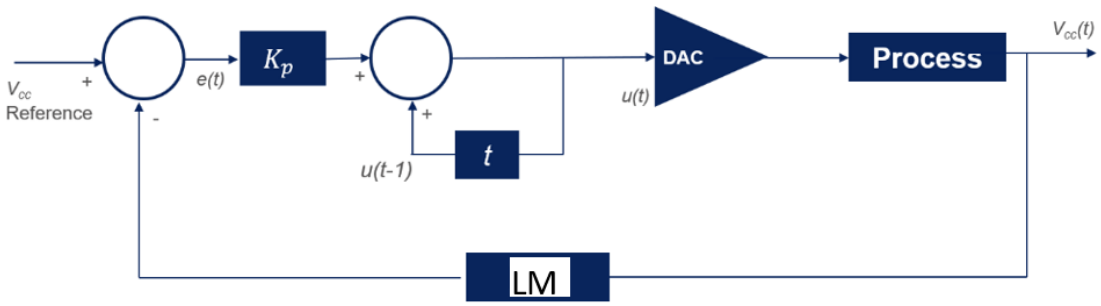

$$u(0) = defined$$

$$u(t) = K_p \times e(t) + u(t-1)$$

Fig. 5

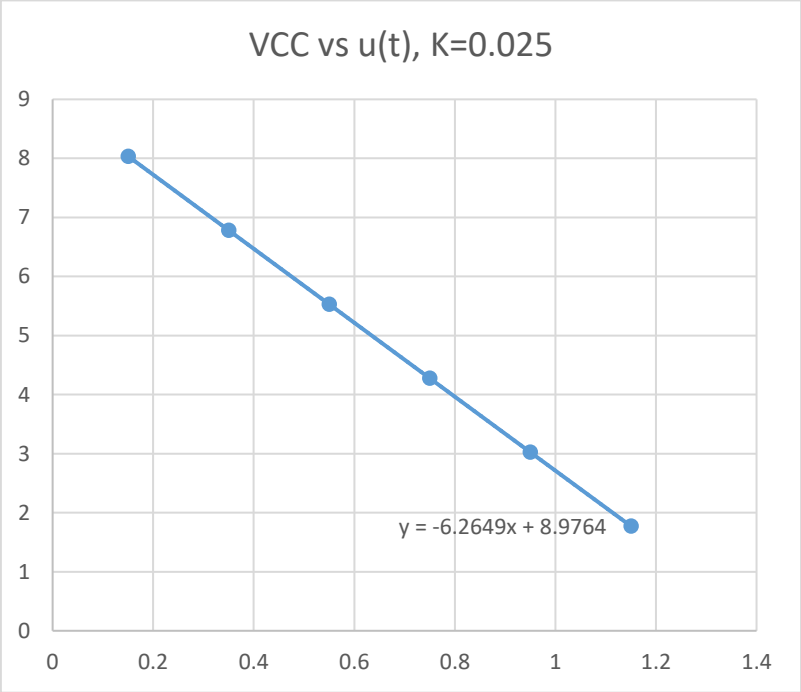
VCC vs u(t), K=0.025
9
8
7
6
5
4
3
2
1
0
0
0.2
0.4
0.6
0.8
1
1.2
1.4
y = -6.2649x + 8.9764

Fig. 6a

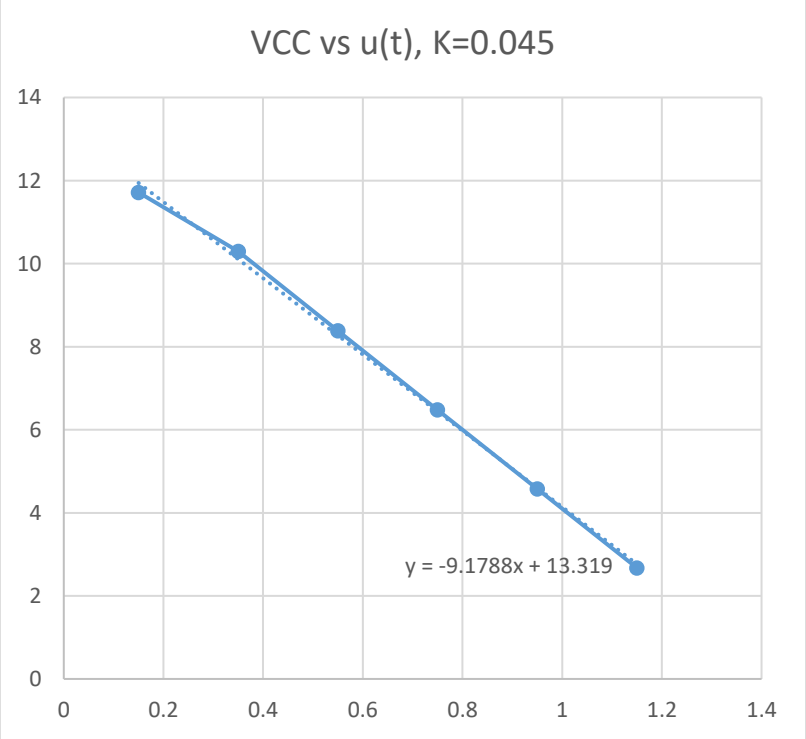
VCC vs u(t), K=0.045
14
12
10
8
6
4
2
0
0
0.2
0.4
0.6
0.8
1
1.2
1.4
y = -9.1788x + 13.319

Fig. 6b

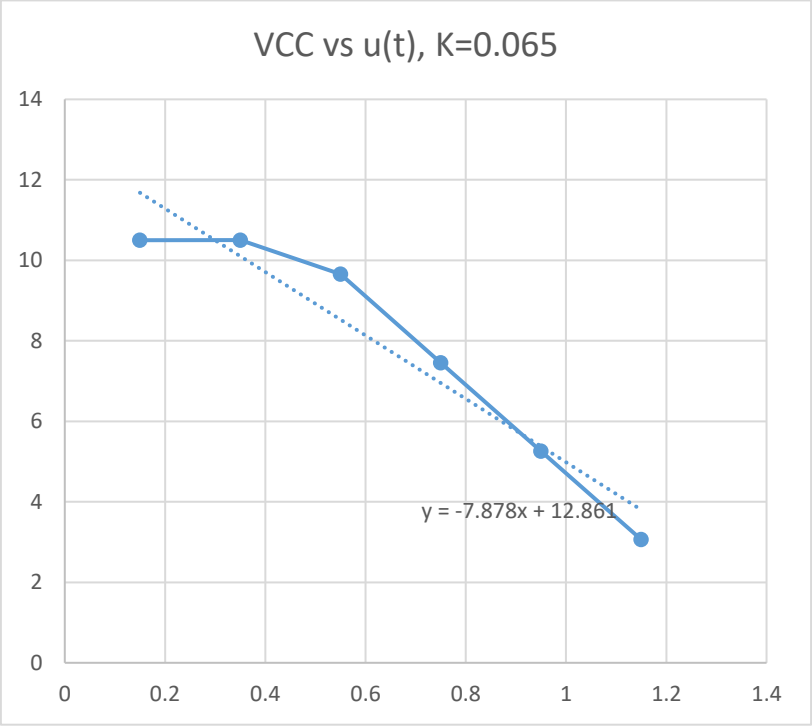
VCC vs u(t), K=0.065
14
12
10
8
6
4
2
0
0
0.2
0.4
0.6
0.8
1
1.2
1.4
y = -7.878x + 12.861

Fig. 6c

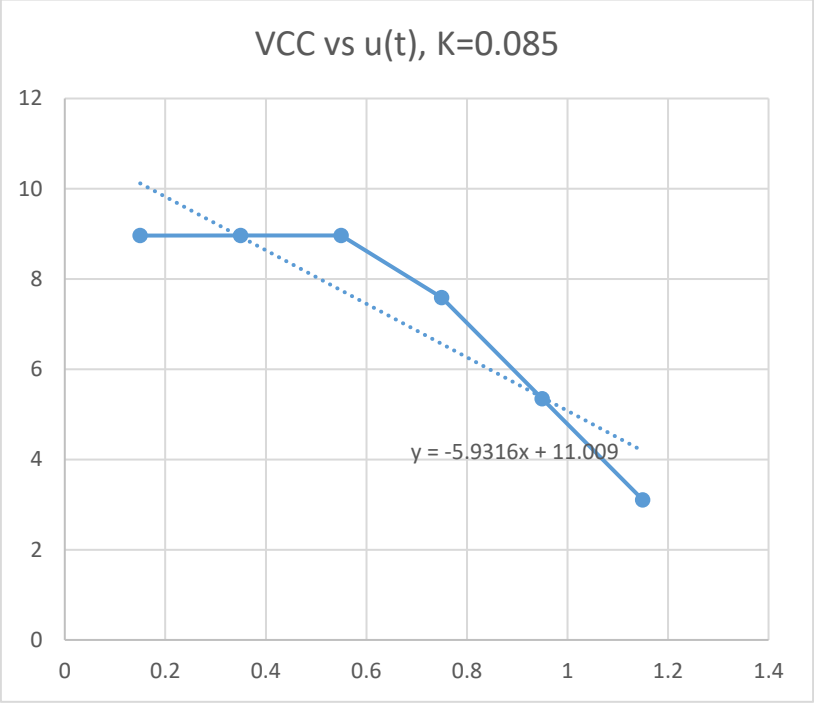
VCC vs u(t), K=0.085
12
10
8
6
4
2
0
0
0.2
0.4
0.6
0.8
1
1.2
1.4
y = -5.9316x + 11.009

Fig. 6d

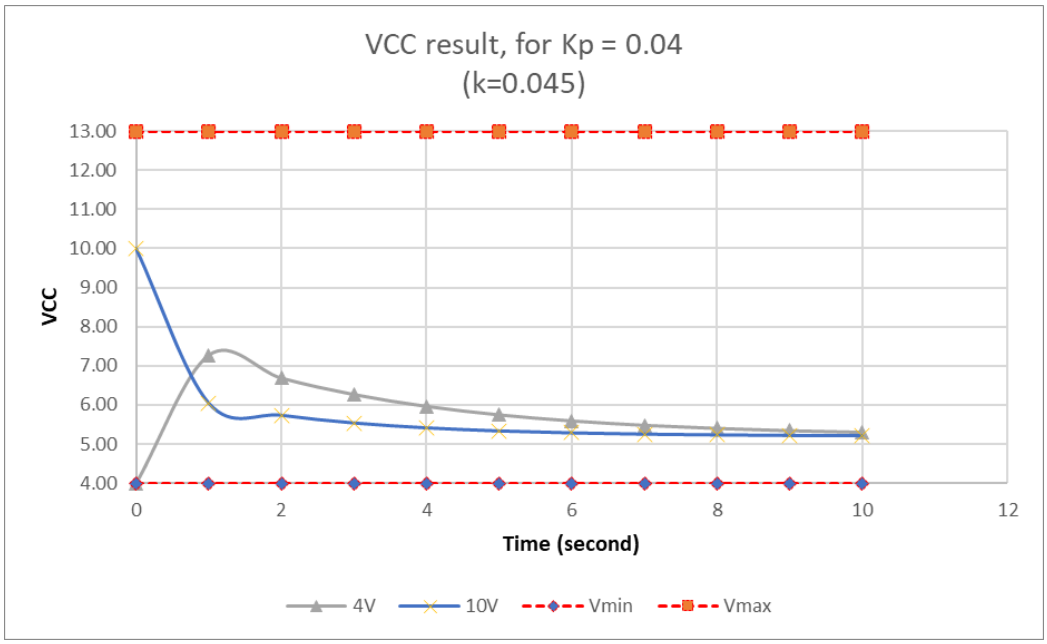
VCC result, for Kp = 0.04
(k=0.045)
13.00
12.00
11.00
10.00
9.00
8.00
7.00
6.00
5.00
4.00
VCC
0
2
4
6
8
10
12
Time (second)
4V
10V
Vmin
Vmax

Fig. 7

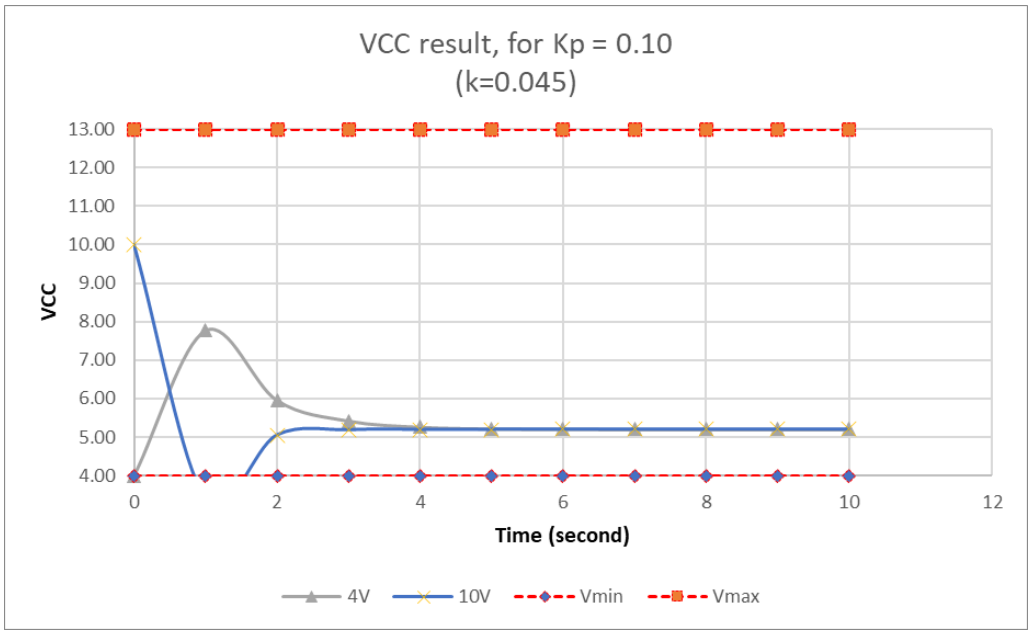
VCC result, for Kp = 0.10
(k=0.045)
13.00
12.00
11.00
10.00
9.00
8.00
7.00
6.00
5.00
4.00
VCC
0
2
4
6
8
10
12
Time (second)
4V
10V
Vmin
Vmax

Fig. 8

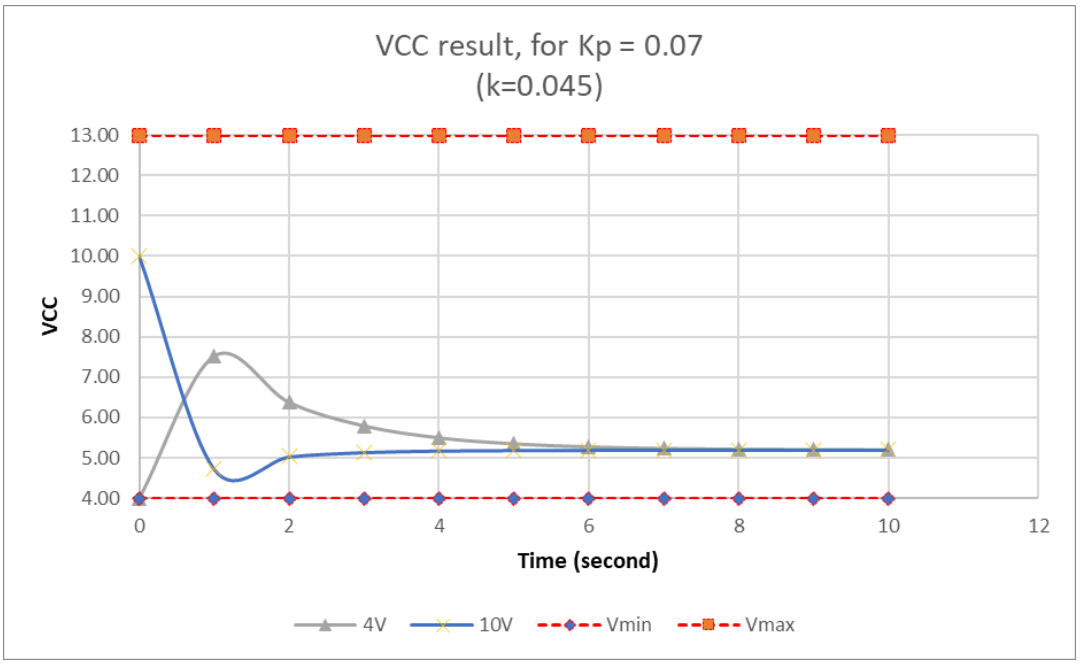
VCC result, for Kp = 0.07
(k=0.045)
13.00
12.00
11.00
10.00
9.00
8.00
7.00
6.00
5.00
4.00
VCC
0
2
4
6
8
10
12
Time (second)
4V
10V
Vmin
Vmax

Fig. 9