(12) INTERNATIONAL APPLICATION PUBLISHED UNDER THE PATENT COOPERATION TREATY (PCT)

(19) World Intellectual Property Organization
International Bureau

(43) International Publication Date
12 June 2008 (12.06.2008)

PCT

(10) International Publication Number
WO 2008/067592 A1

(51) International Patent Classification:
E04B 1/344 (2006.01) *E04H 1/02* (2006.01)

(21) International Application Number:
PCT/AU2007/001864

(22) International Filing Date:
4 December 2007 (04.12.2007)

(25) Filing Language: English

(26) Publication Language: English

(30) Priority Data:
2006906800 5 December 2006 (05.12.2006) AU

(71) Applicant *(for all designated States except US)*: **SMARTECH DESIGNS PTY LIMITED** [AU/AU]; 700 The Scenic Road, Macmasters Beach, New South Wales 2251 (AU).

(72) Inventors; and

(75) Inventors/Applicants *(for US only)*: **ALFORD, Arnold** [AU/AU]; 700 The Scenic Road, Macmasters Beach, New South Wales 2251 (AU). **DEMARTINS, John** [PT/AU]; 700 The Scenic Road, Macmasters Beach, New South Wales 2251 (AU). **GORNOVICEANU, Razvan** [RO/AU]; 700 The Scenic Road, Macmasters Beach, New South Wales 2251 (AU).

(74) Agent: **HOLLIDAY, Neal, Joseph**; Janet Stead & Associates, PO Box 2076, Claremont North, Western Australia 6010 (AU).

(81) Designated States *(unless otherwise indicated, for every kind of national protection available)*: AE, AG, AL, AM, AT, AU, AZ, BA, BB, BG, BH, BR, BW, BY, BZ, CA, CH, CN, CO, CR, CU, CZ, DE, DK, DM, DO, DZ, EC, EE, EG, ES, FI, GB, GD, GE, GH, GM, GT, HN, HR, HU, ID, IL, IN, IS, JP, KE, KG, KM, KN, KP, KR, KZ, LA, LC, LK, LR, LS, LT, LU, LY, MA, MD, ME, MG, MK, MN, MW, MX, MY, MZ, NA, NG, NI, NO, NZ, OM, PG, PH, PL, PT, RO, RS, RU, SC, SD, SE, SG, SK, SL, SM, SV, SY, TJ, TM, TN, TR, TT, TZ, UA, UG, US, UZ, VC, VN, ZA, ZM, ZW.

(84) Designated States *(unless otherwise indicated, for every kind of regional protection available)*: ARIPO (BW, GH, GM, KE, LS, MW, MZ, NA, SD, SL, SZ, TZ, UG, ZM, ZW), Eurasian (AM, AZ, BY, KG, KZ, MD, RU, TJ, TM), European (AT, BE, BG, CH, CY, CZ, DE, DK, EE, ES, FI, FR, GB, GR, HU, IE, IS, IT, LT, LU, LV, MC, MT, NL, PL, PT, RO, SE, SI, SK, TR), OAPI (BF, BJ, CF, CG, CI, CM, GA, GN, GQ, GW, ML, MR, NE, SN, TD, TG).

Published:
— *with international search report*

(54) Title: A FOLDABLE ENCLOSURE

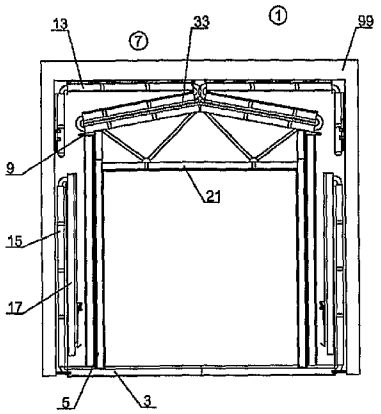

(57) Abstract: The present invention provides a foldable enclosure intending as a building or portion of a building that may be transported to a desired site in a folded configuration and then expanded into its intended form. The enclosure has a floor and two wall or roof support section extending upwardly from opposed sides of the floor section. A first roof section spans across the gap between the wall or roof support sections. At least a second roof section in provided that is pivotally mounted to the structure to overlie the first roof section in transit and fold out to extend outwardly substantially in plane with the first roof section in the expanded form. Similarly, second floor sections may be pivotally mounted to lie adjacent the wall/roof support sections in transit and extend outwardly substantially in plane with the first floor section when expanded. A further wall section may be pivotally connected to the end of the second floor section so that it may lie parallel and adjacent the second floor section in transit and extend upwardly from the second floor section when expanded to interconnect with the expanded roof and complete the enclosure. In the preferred form the structure includes a third roof section pivotally mounted to the second roof section to further extend the roof in the expanded configuration to meet and connect with the further wall section.

WO 2008/067592 A1