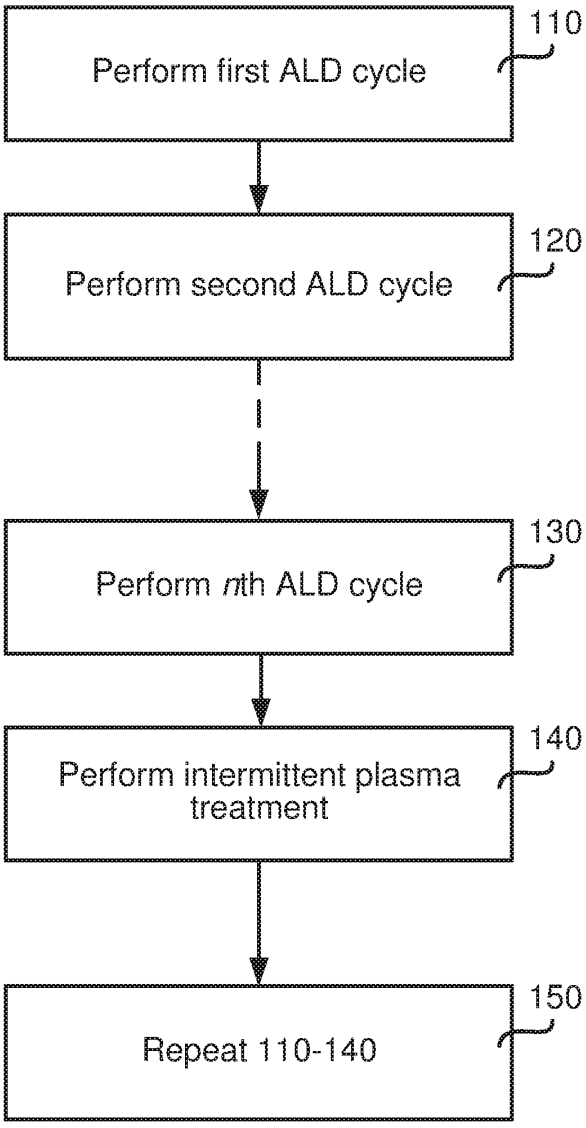
Perform first ALD cycle
110
Perform second ALD cycle
120
Perform nth ALD cycle
130
Perform intermittent plasma treatment
140
Repeat 110-140
150

FIG. 1

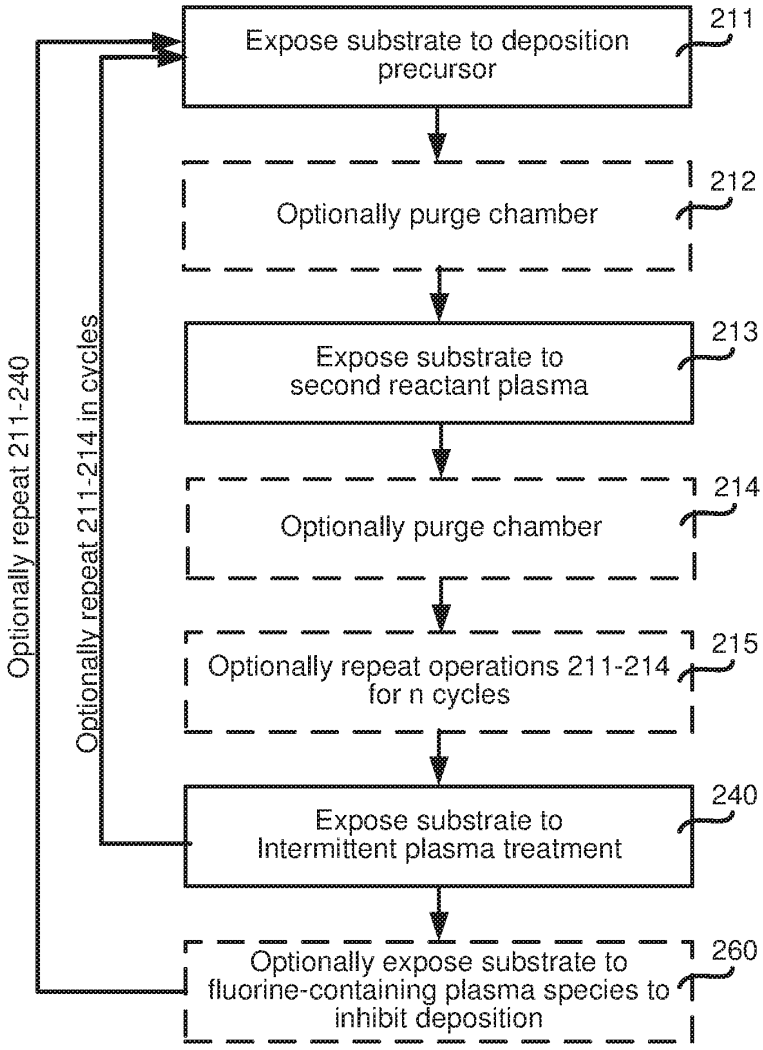
Expose substrate to deposition precursor
211
Optionally purge chamber
212
Expose substrate to second reactant plasma
213
Optionally purge chamber
214
Optionally repeat operations 211-214 for n cycles
215
Expose substrate to Intermittent plasma treatment
240
Optionally expose substrate to fluorine-containing plasma species to inhibit deposition
260
Optionally repeat 211-214 in cycles
Optionally repeat 211-240

FIG. 2

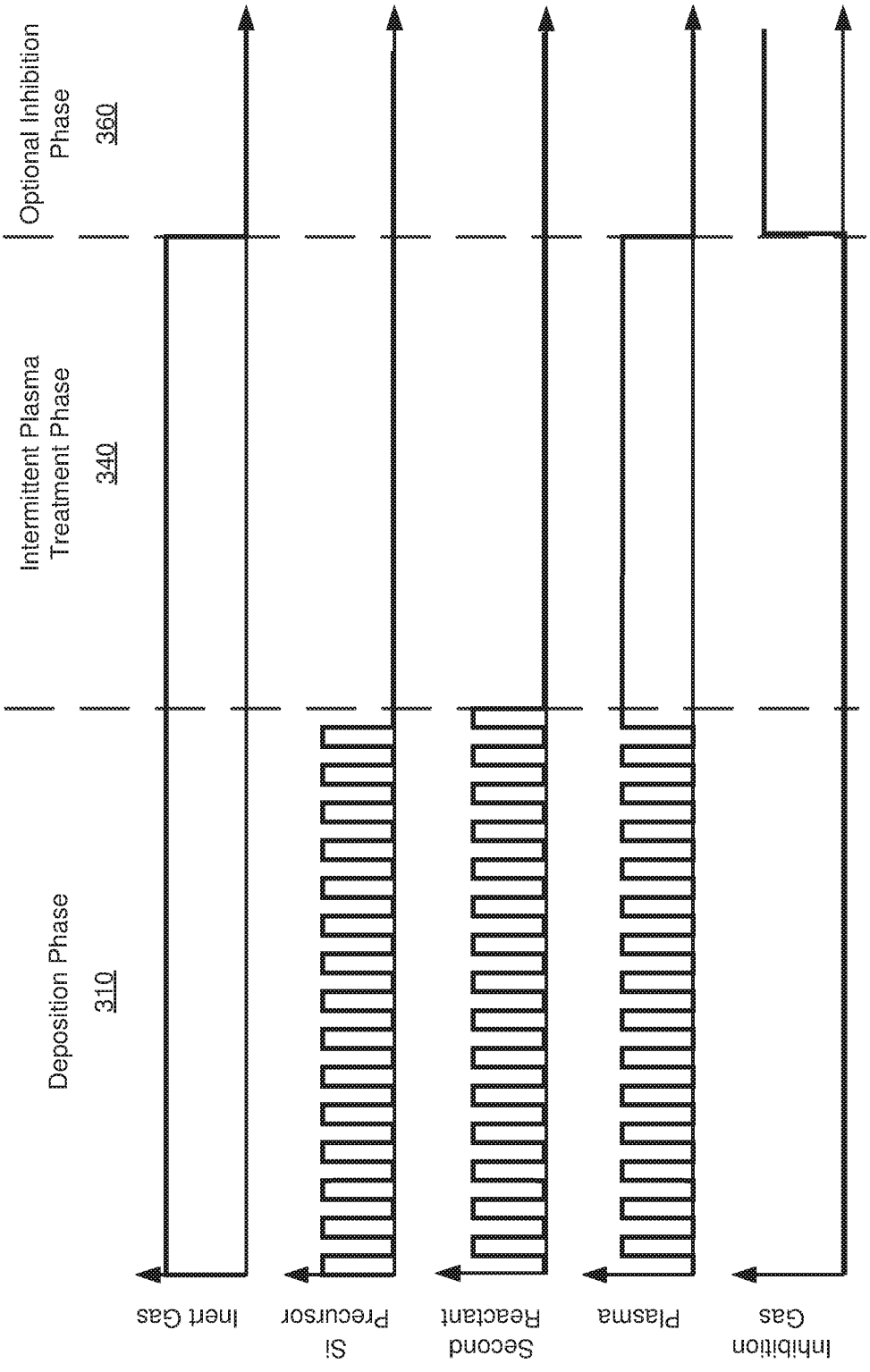
Deposition Phase
310
Intermittent Plasma
Treatment Phase
340
Optional Inhibition
Phase
360
Inert Gas
Si
Precursor
Second
Reactant
Plasma
Inhibition
Gas
300

FIG. 3

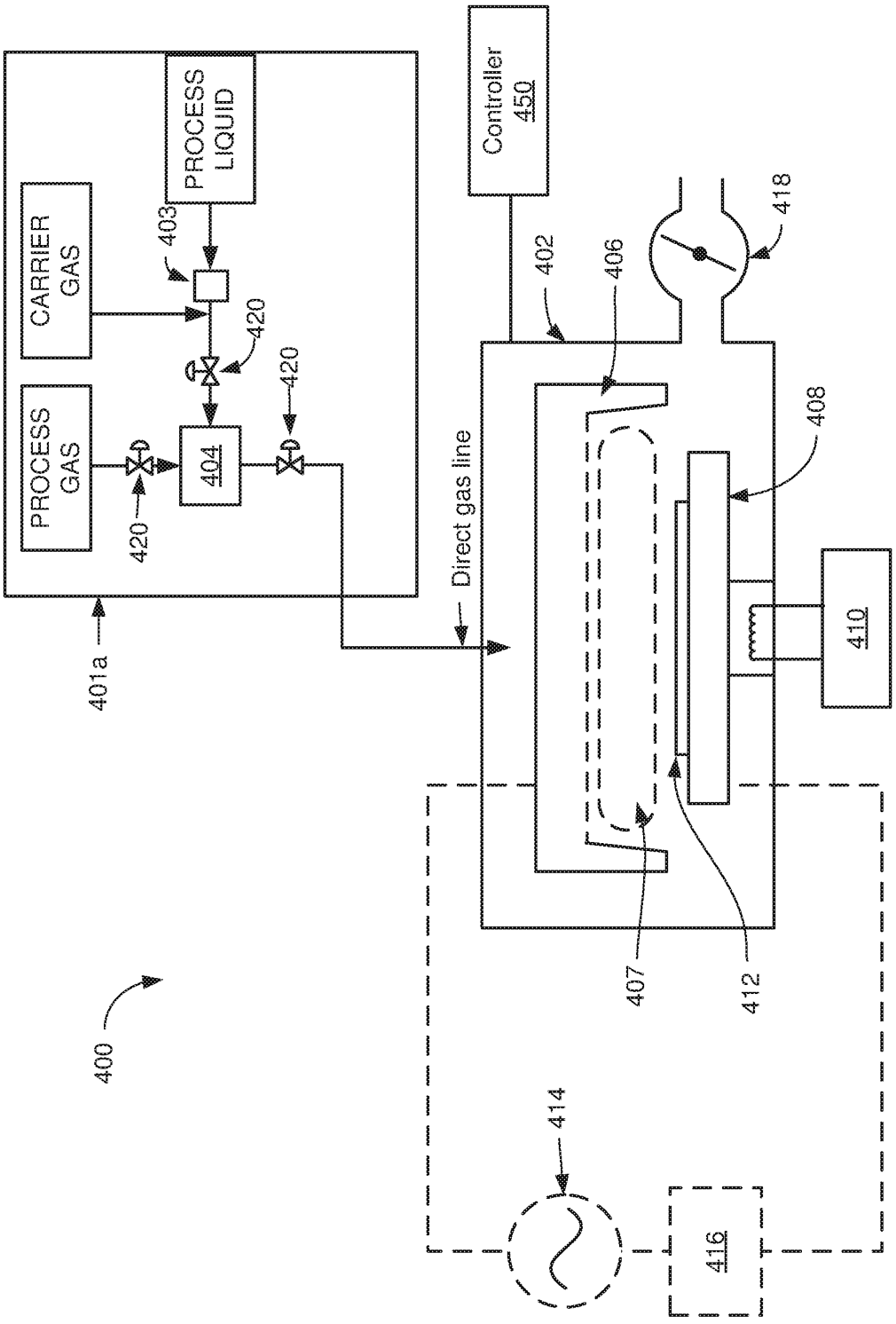
PROCESS LIQUID
CARRIER GAS
PROCESS GAS
403
420
420
420
404
401a
400
Direct gas line
Controller 450
402
406
418
408
410
407
412
414
416

FIG. 4

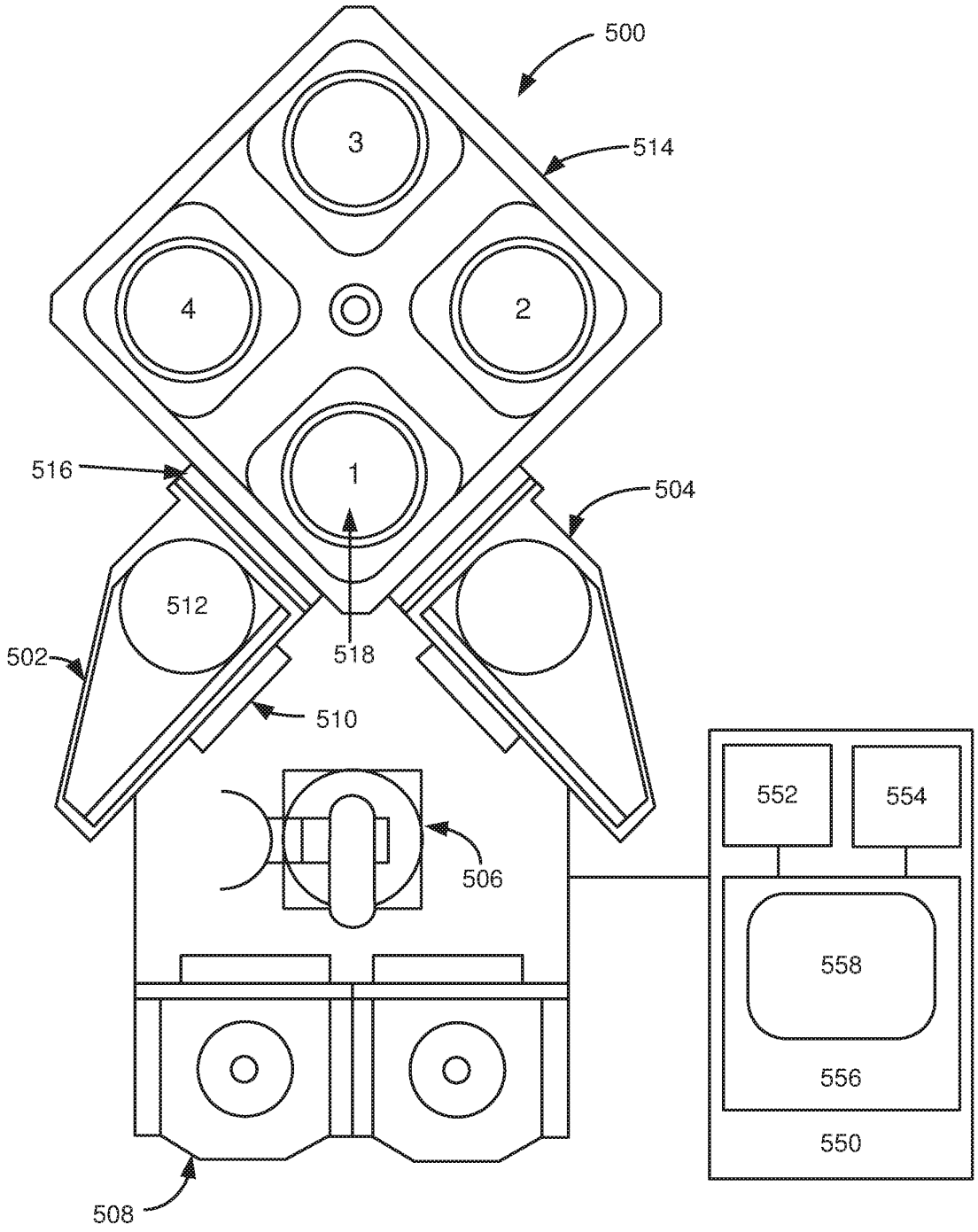

FIG. 5

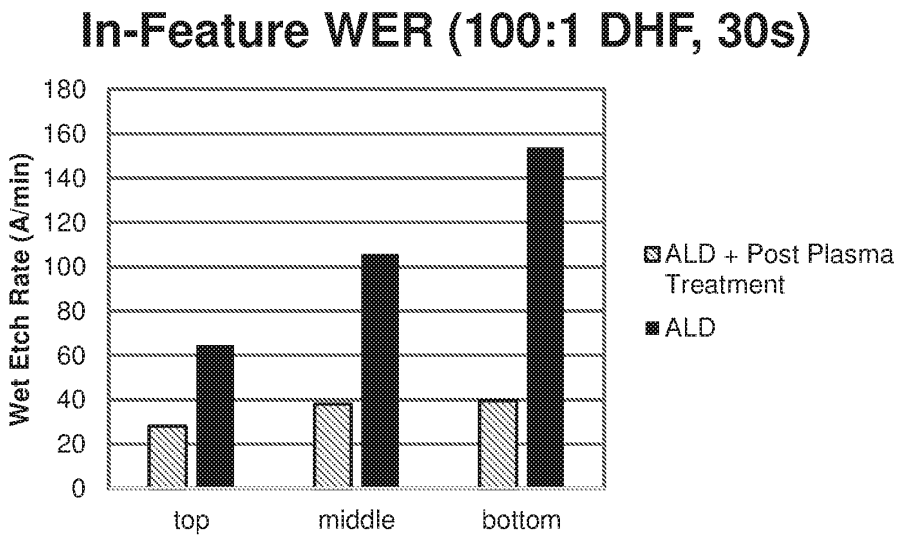
In-Feature WER (100:1 DHF, 30s)
Wet Etch Rate (A/min)
180
160
140
120
100
80
60
40
20
0
top
middle
bottom
ALD + Post Plasma Treatment
ALD

FIG. 6

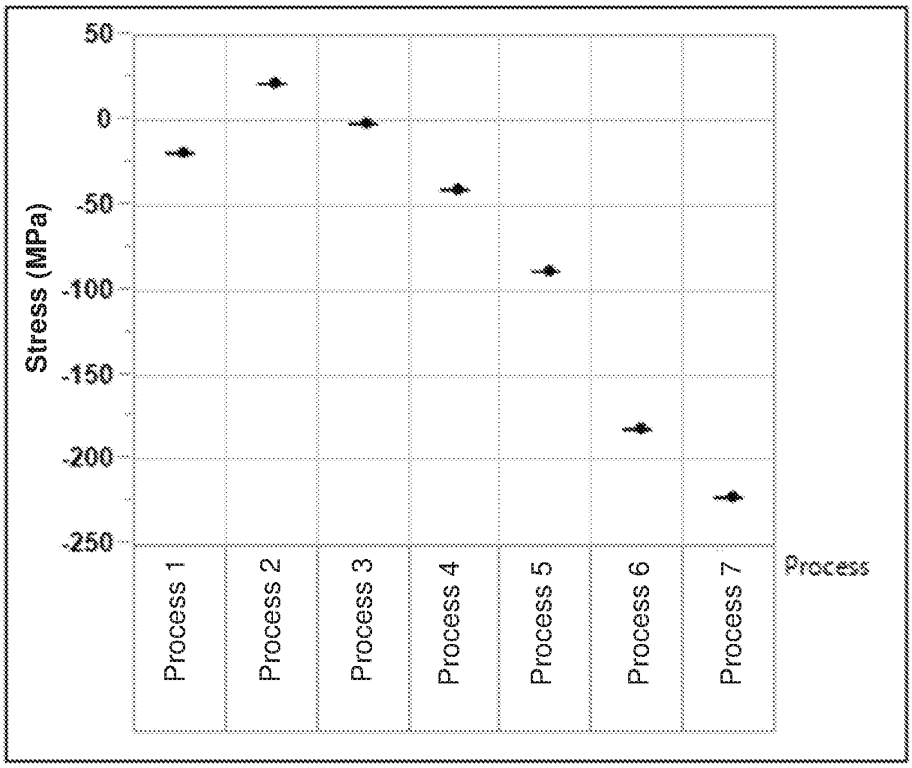
Stress (MPa)
50
0
-50
-100
-150
-200
-250
Process 1
Process 2
Process 3
Process 4
Process 5
Process 6
Process 7
Process

FIG. 7

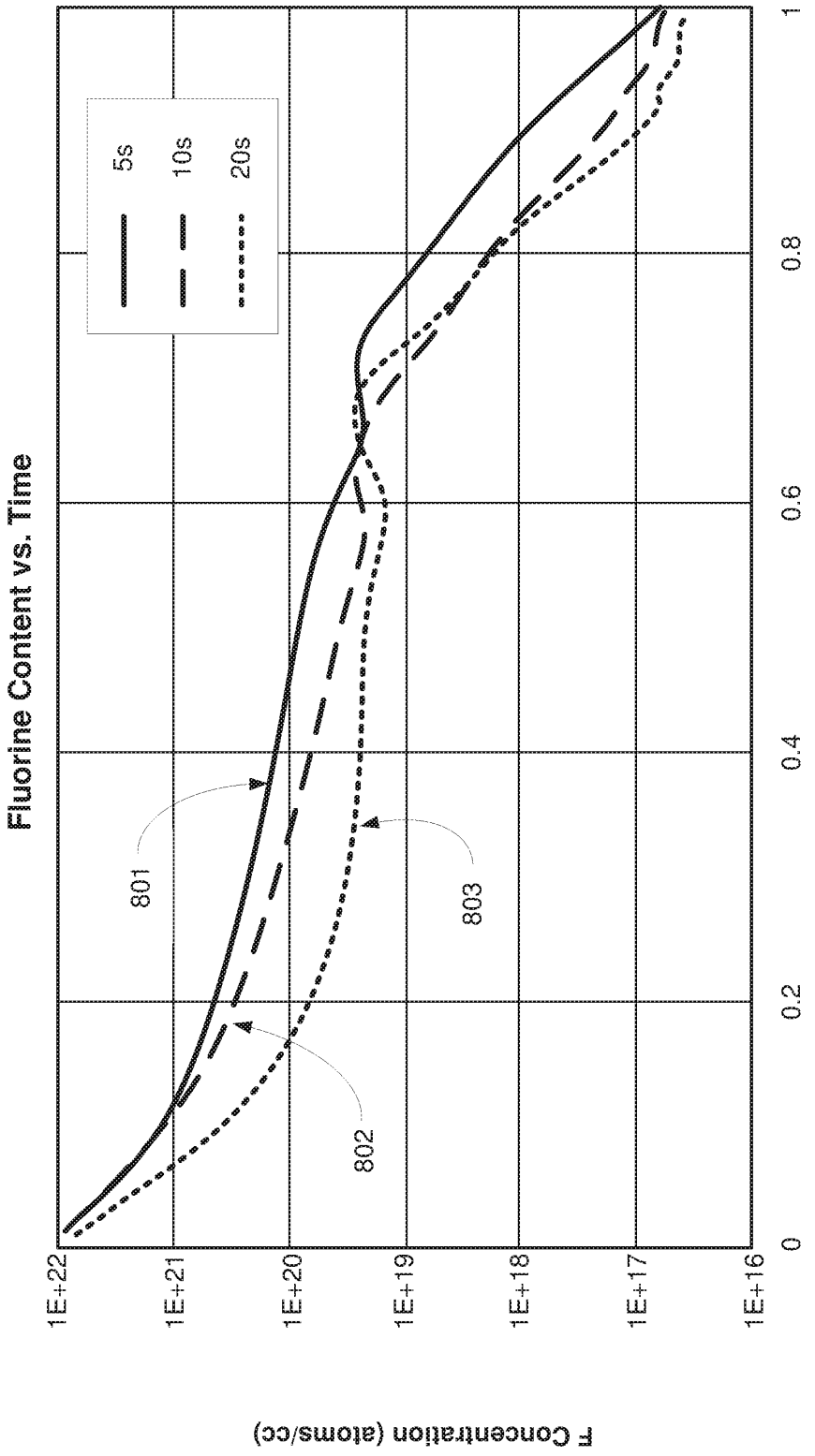
Fluorine Content vs. Time
5s
10s
20s
801
802
803
F Concentration (atoms/cc)
1E+22
1E+21
1E+20
1E+19
1E+18
1E+17
1E+16
0
0.2
0.4
0.6
0.8
1
Normalized Depth

FIG. 8

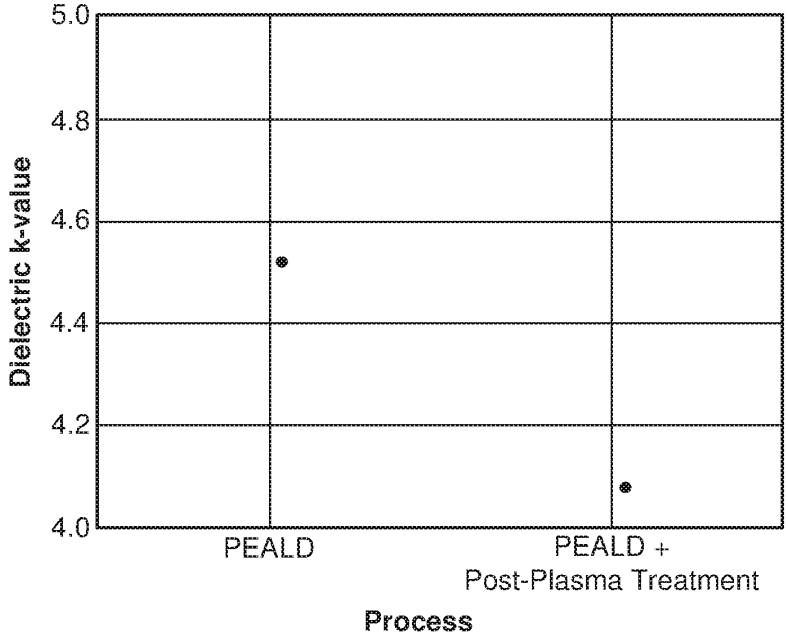
5.0
4.8
4.6
4.4
4.2
4.0
Dielectric k-value
PEALD
PEALD +
Post-Plasma Treatment
Process

FIG. 9

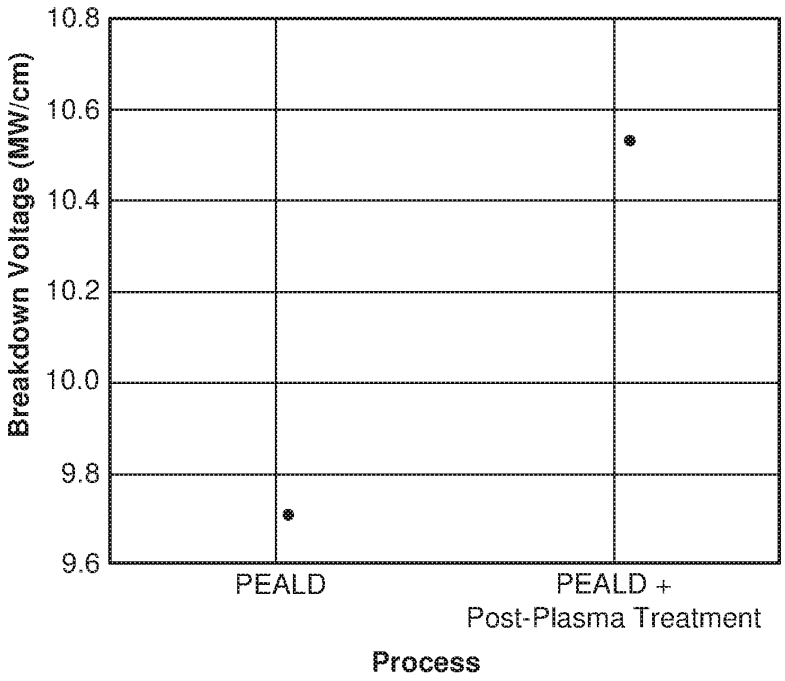
10.8
10.6
10.4
10.2
10.0
9.8
9.6
Breakdown Voltage (MW/cm)
PEALD
PEALD +
Post-Plasma Treatment
Process

FIG. 10

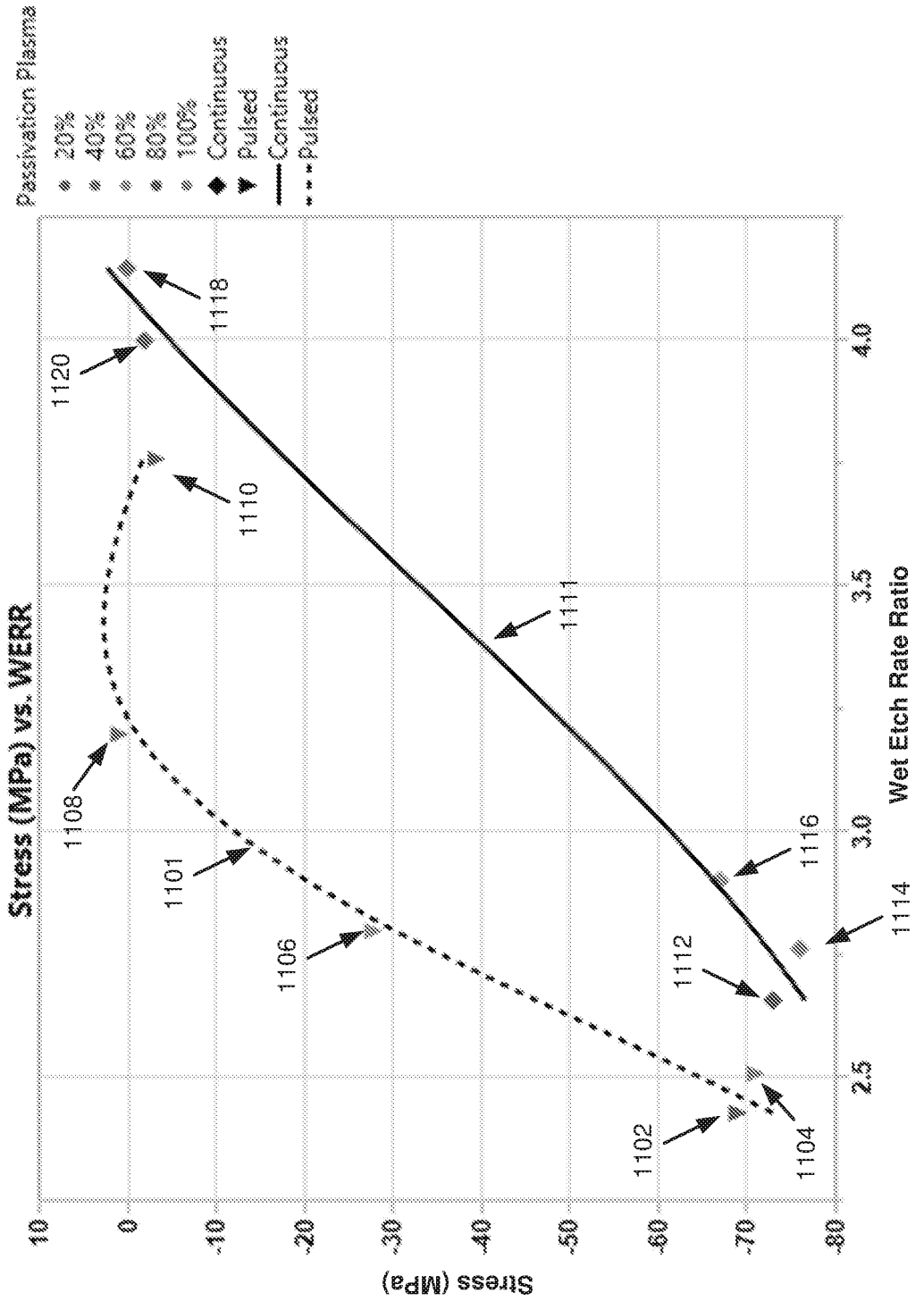
Stress (MPa) vs. WERR
Passivation Plasma
20%
40%
60%
80%
100%
Continuous
Pulsed
Continuous
Pulsed
Stress (MPa)
10
0
-10
-20
-30
-40
-50
-60
-70
-80
2.5
3.0
3.5
4.0
Wet Etch Rate Ratio
1101
1102
1104
1106
1108
1110
1111
1112
1114
1116
1118
1120

FIG. 11