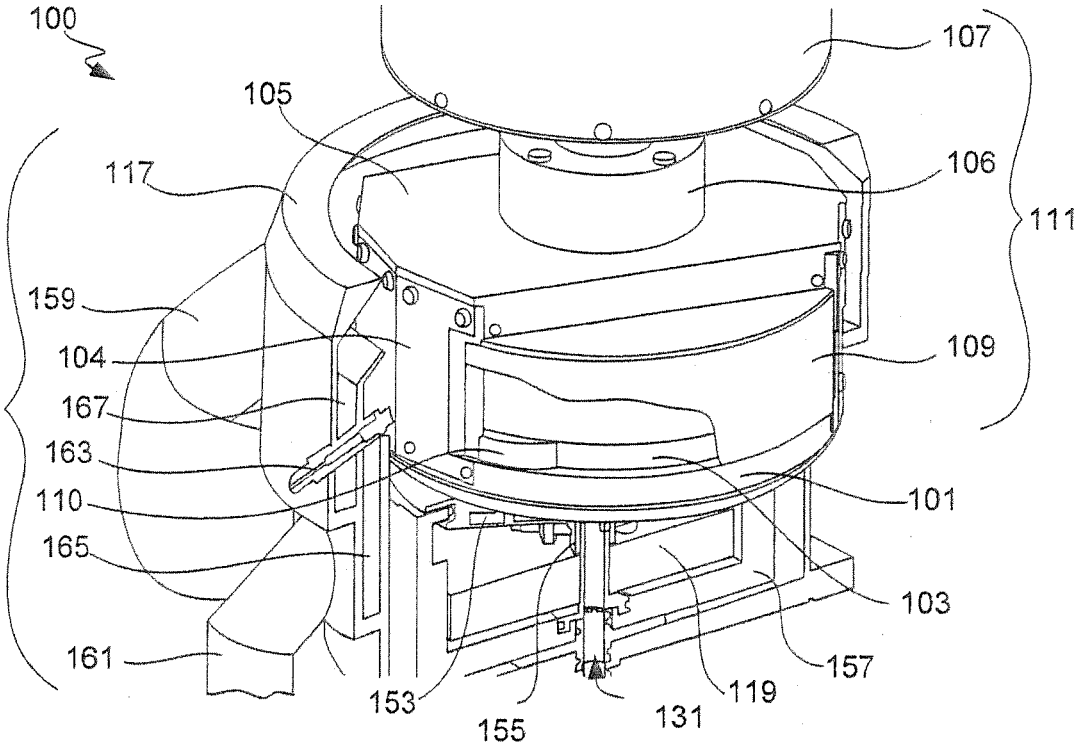
100
107
105
117
106
111
159
104
109
167
163
101
110
165
103
161
157
153
155
131
119

FIG. 1

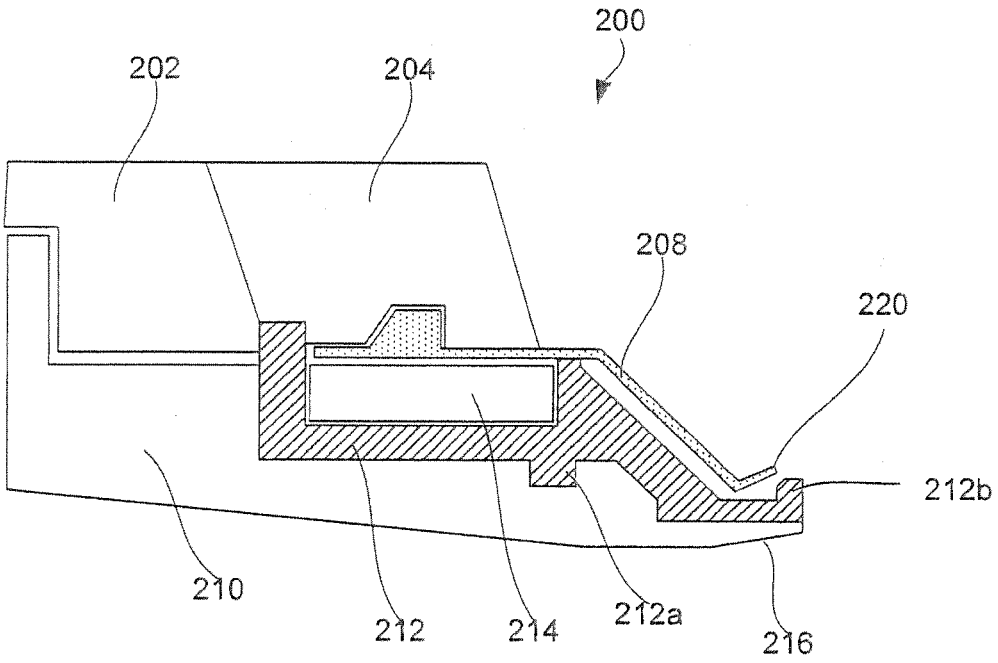

FIG. 2A

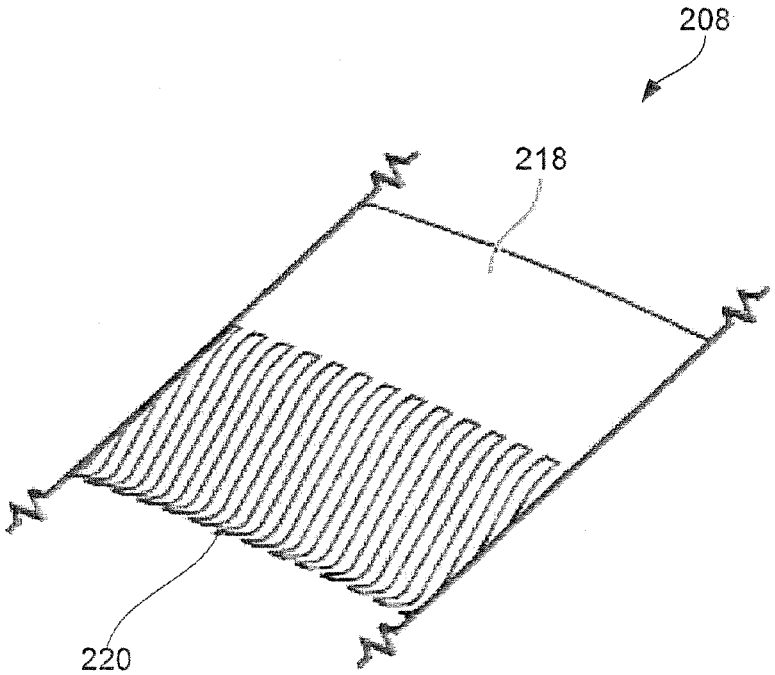

FIG. 2B

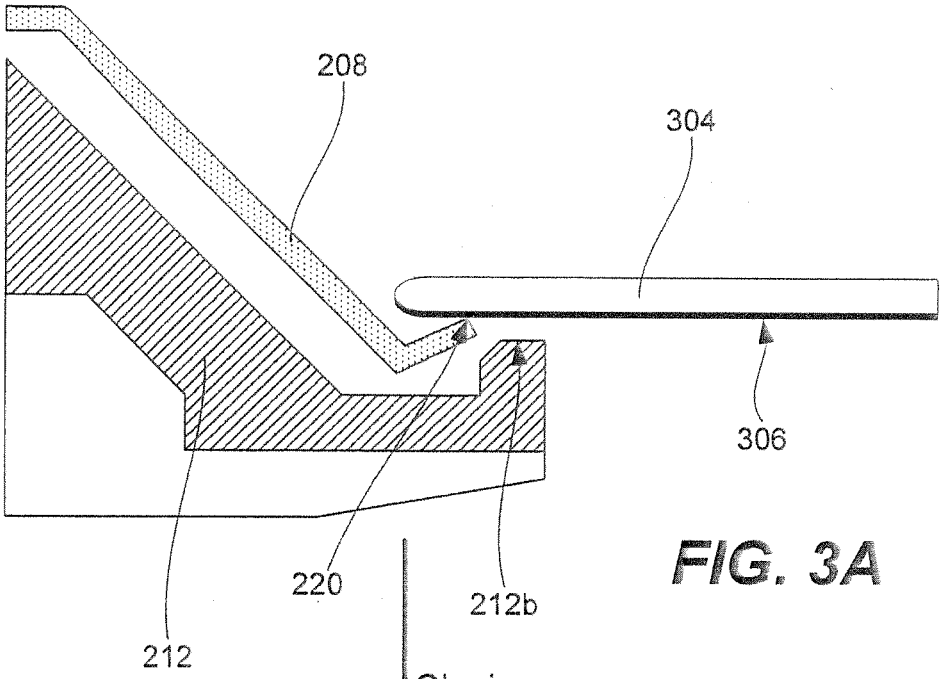
208
304
306
220
212b
212
Closing

FIG. 3A

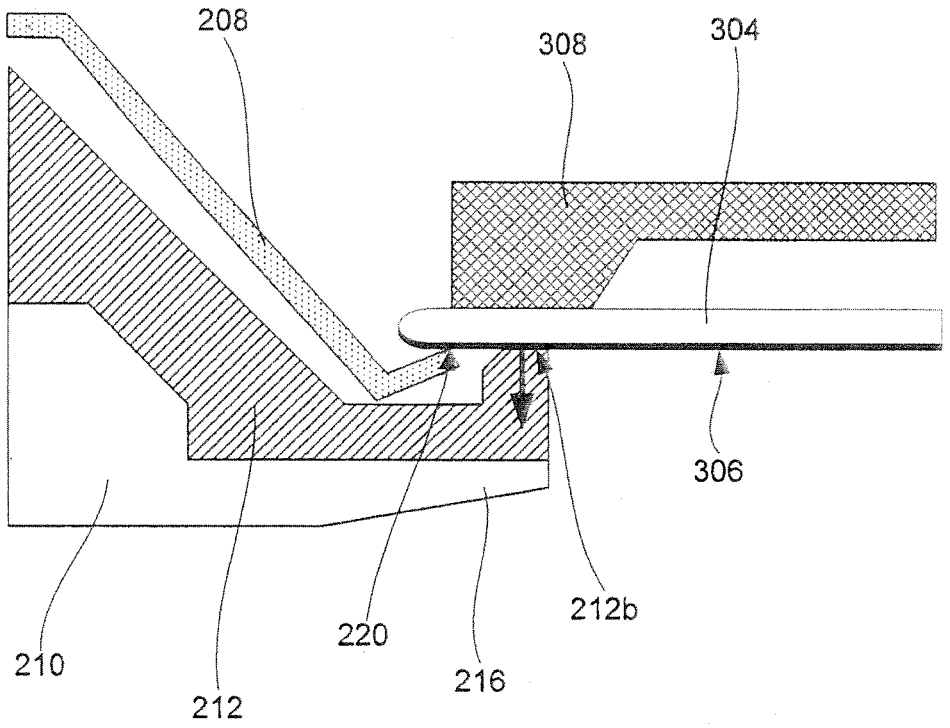
208
308
304
306
210
212
220
216
212b

FIG. 3B

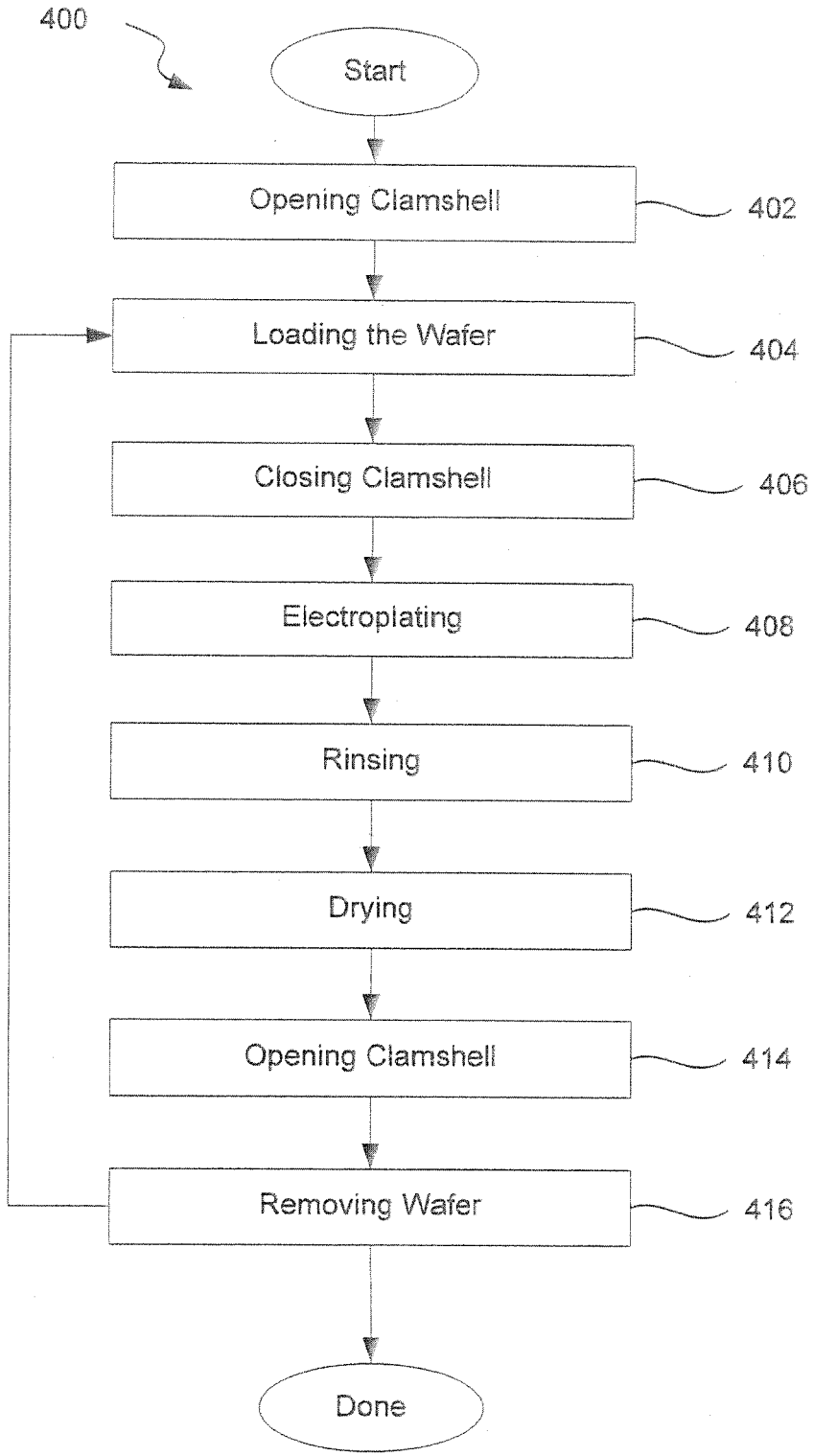
400
Start
Opening Clamshell
402
Loading the Wafer
404
Closing Clamshell
406
Electroplating
408
Rinsing
410
Drying
412
Opening Clamshell
414
Removing Wafer
416
Done

FIG. 4

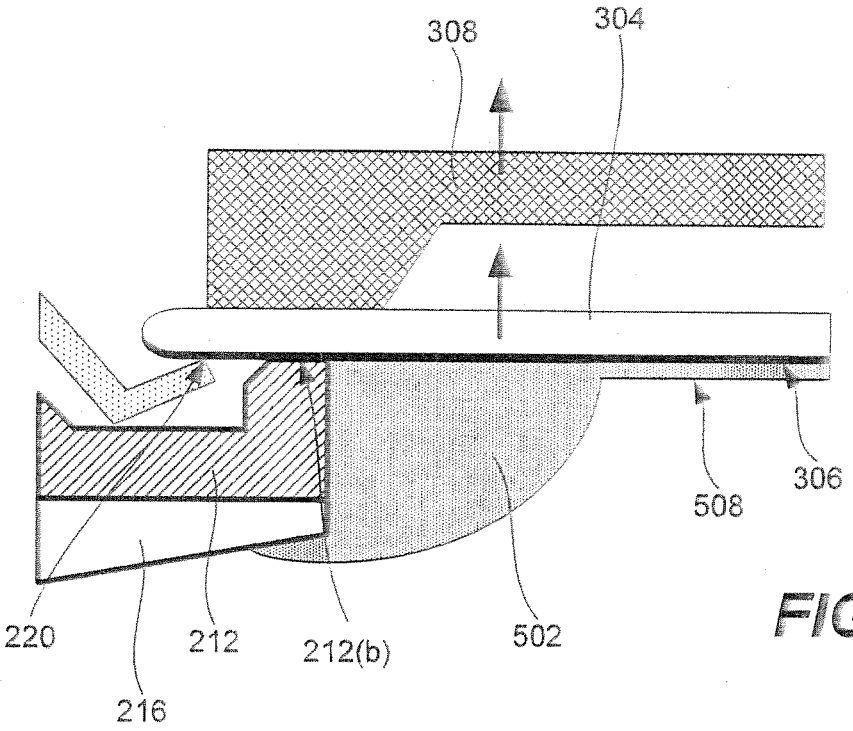

FIG. 5A

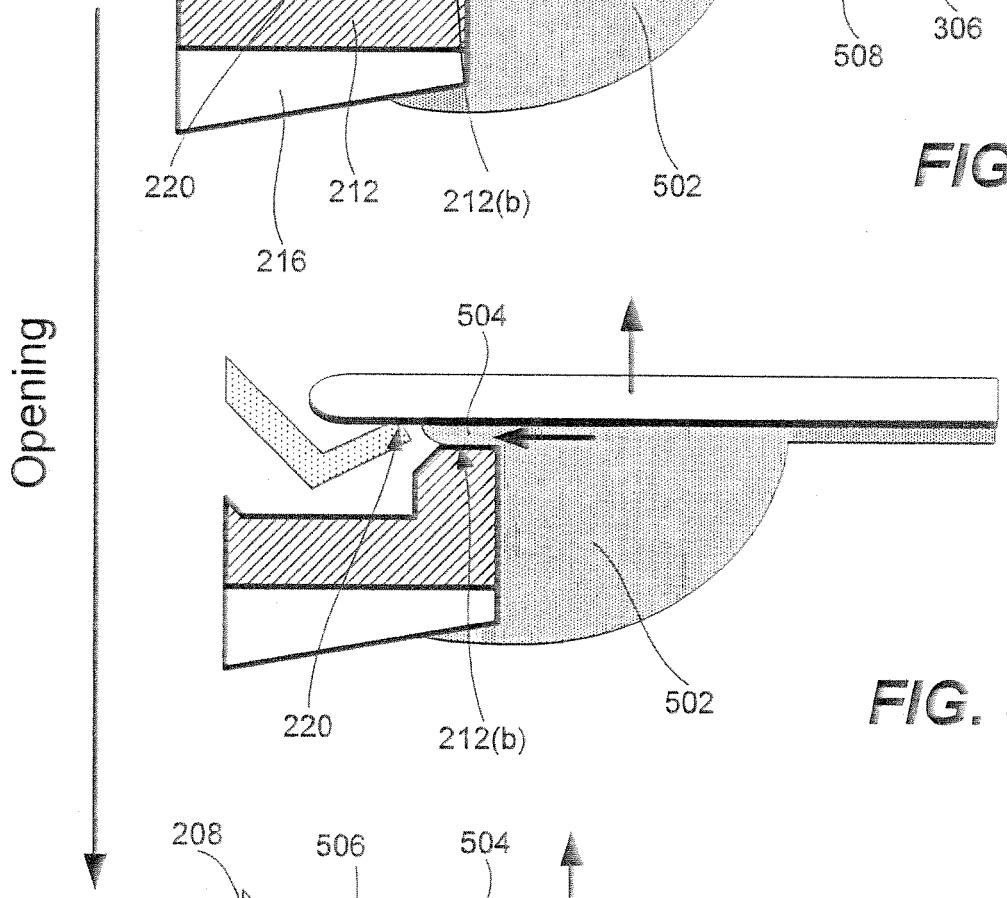

FIG. 5B

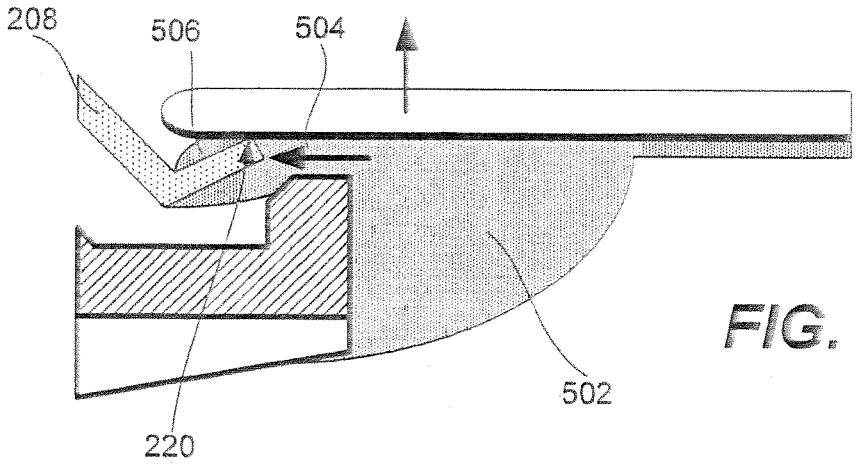

FIG. 5C

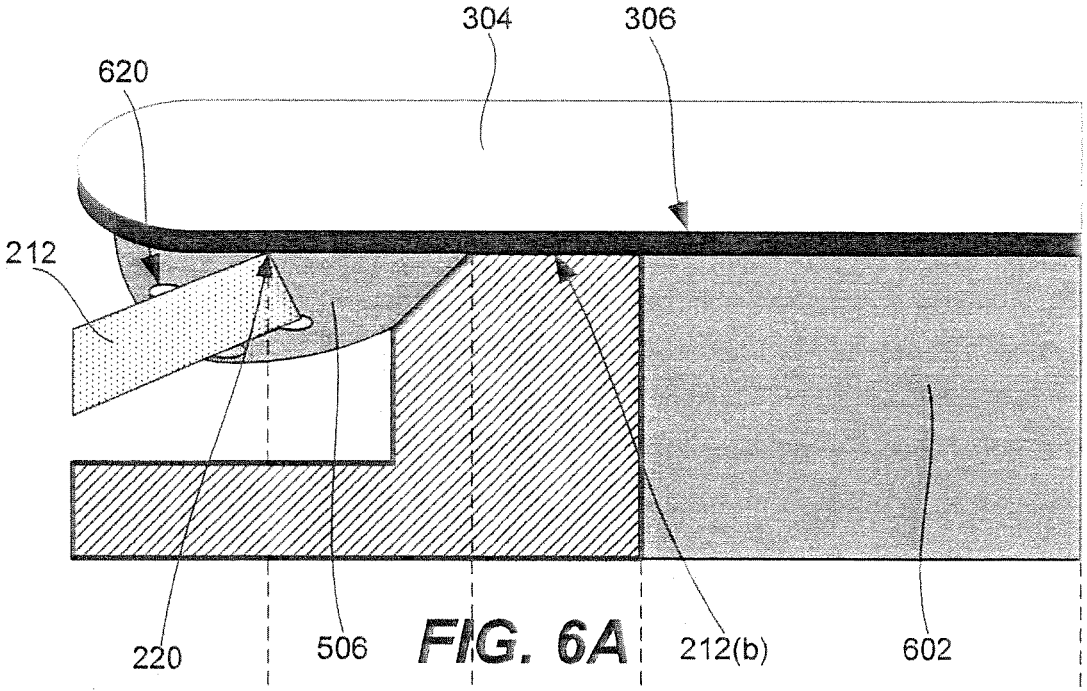
304
306
620
212
220
506
212(b)
602

FIG. 6A

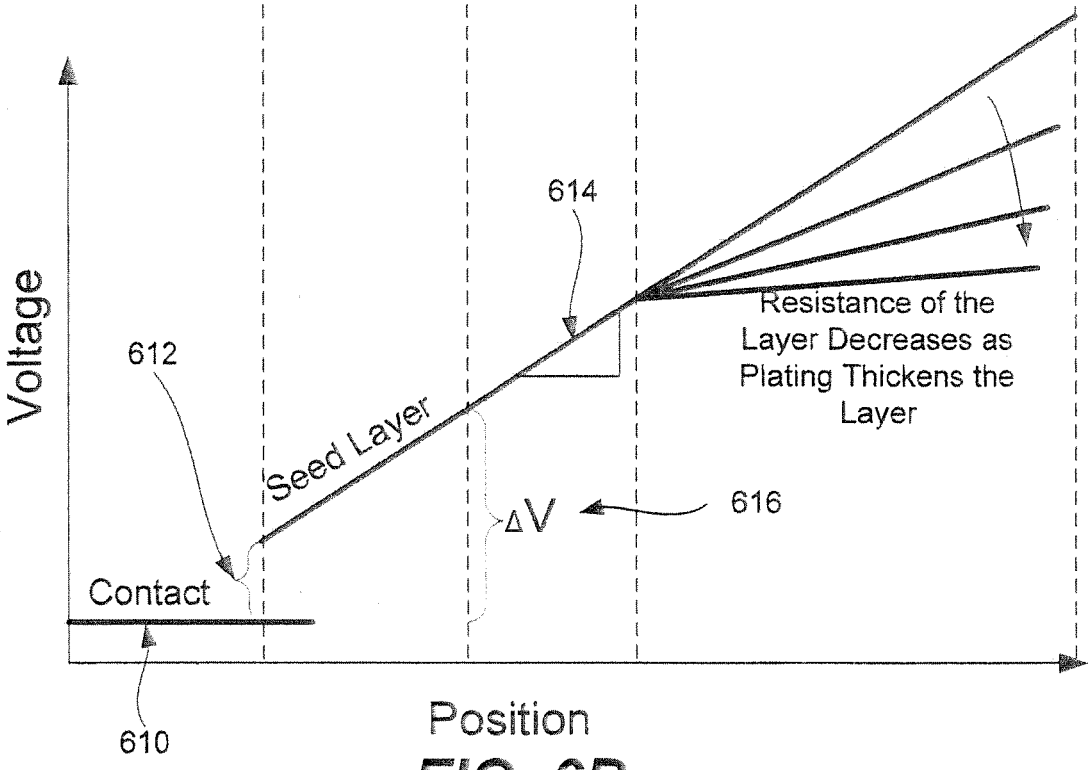
Voltage
614
612
Seed Layer
Resistance of the Layer Decreases as Plating Thickens the Layer
ΔV
616
Contact
610
Position

FIG. 6B

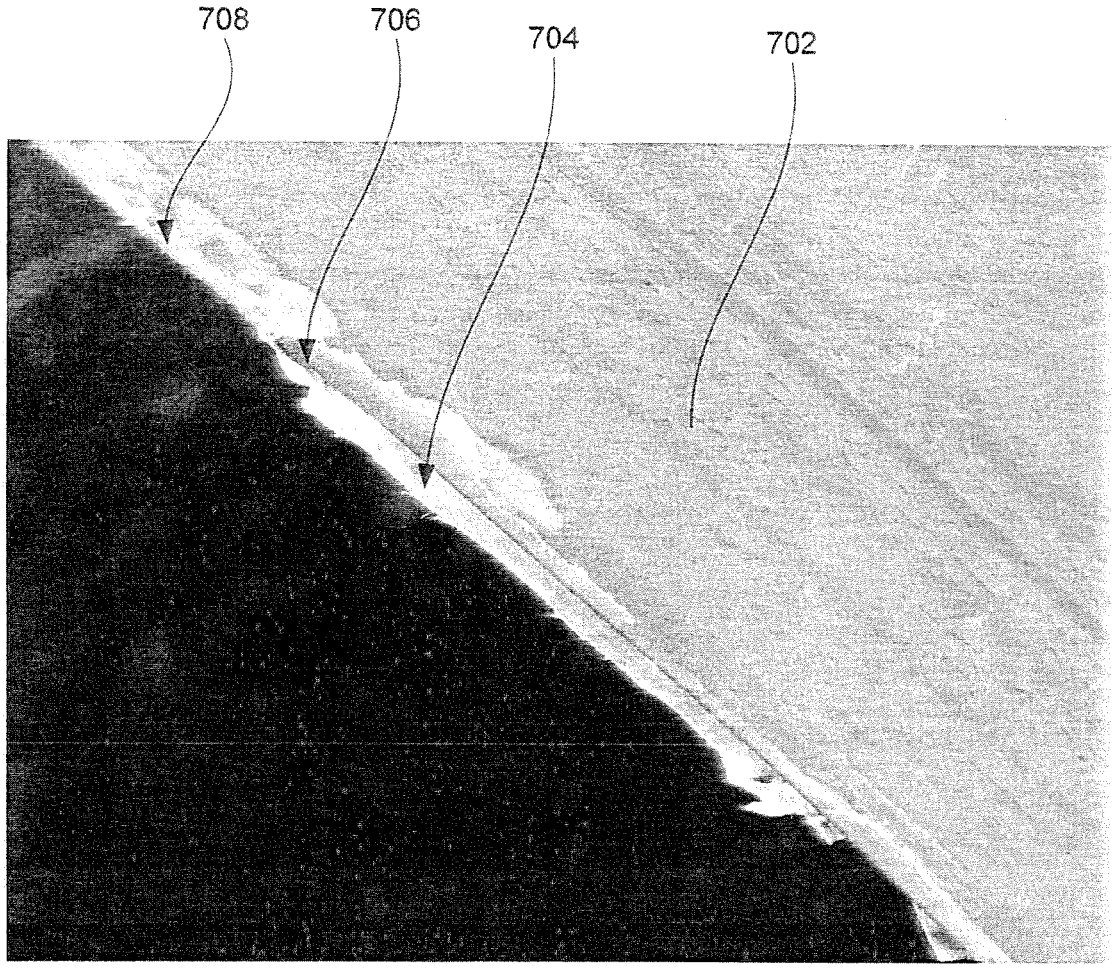

FIG. 7A

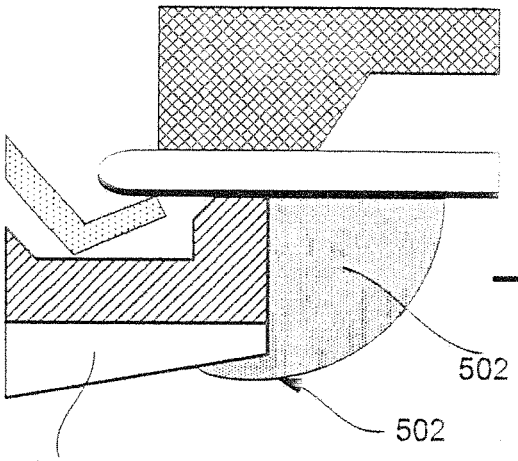

FIG. 7B

Open

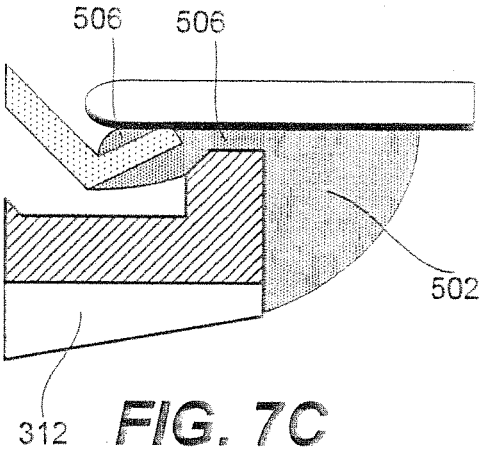

FIG. 7C

Change to More Hydrophobic Coating

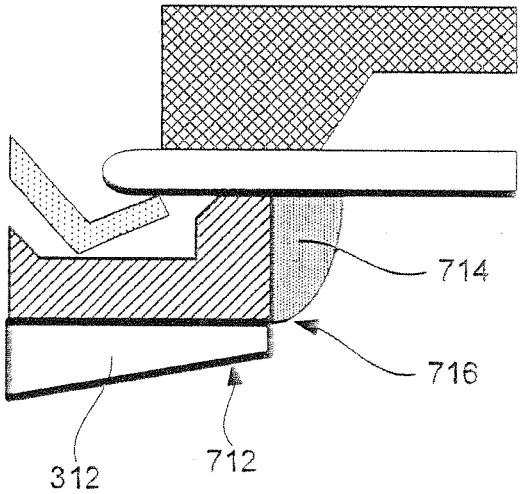

FIG. 7D

Open

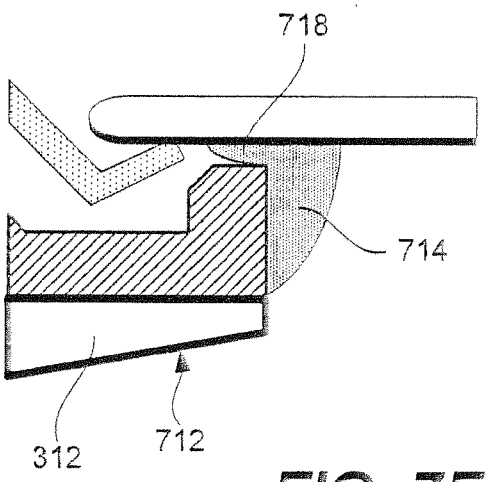

FIG. 7E

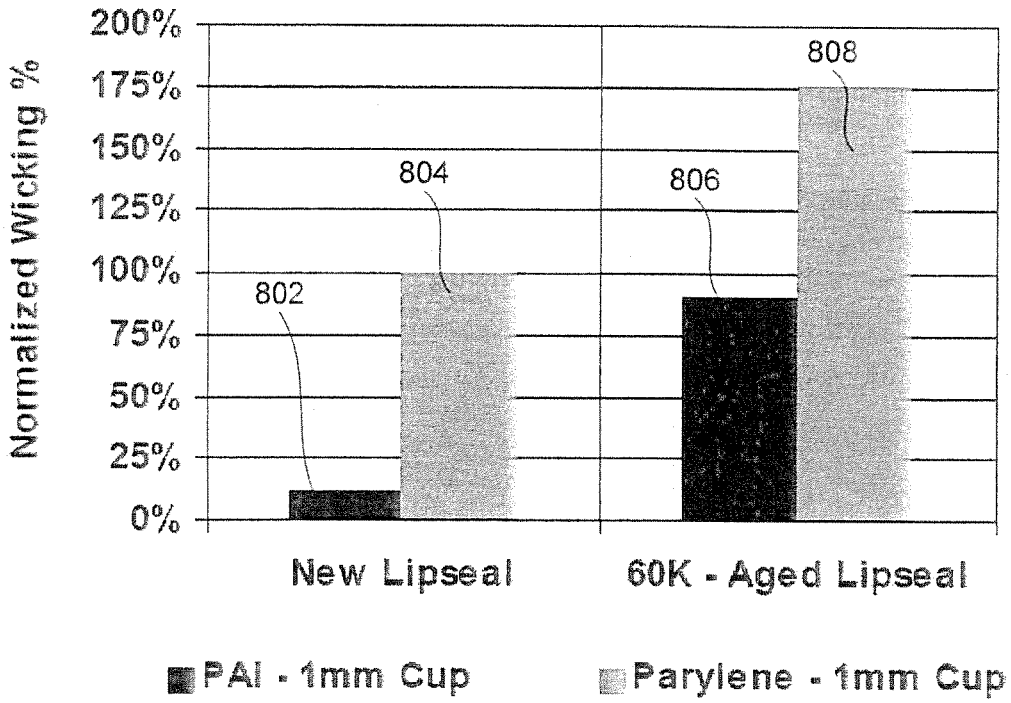
200%
175%
150%
125%
100%
75%
50%
25%
0%
Normalized Wicking %
802
804
806
808
New Lipseal
60K - Aged Lipseal
PAI - 1mm Cup
Parylene - 1mm Cup

FIG. 8A

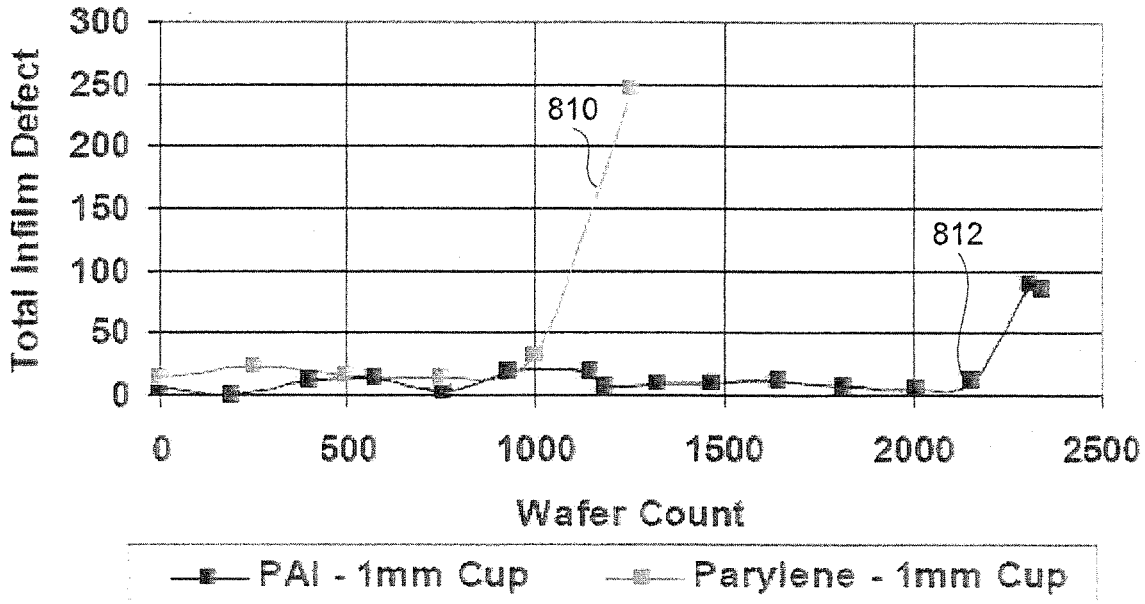
300
250
200
150
100
50
0
Total Infilm Defect
810
812
0
500
1000
1500
2000
2500
Wafer Count
PAI - 1mm Cup
Parylene - 1mm Cup

FIG. 8B

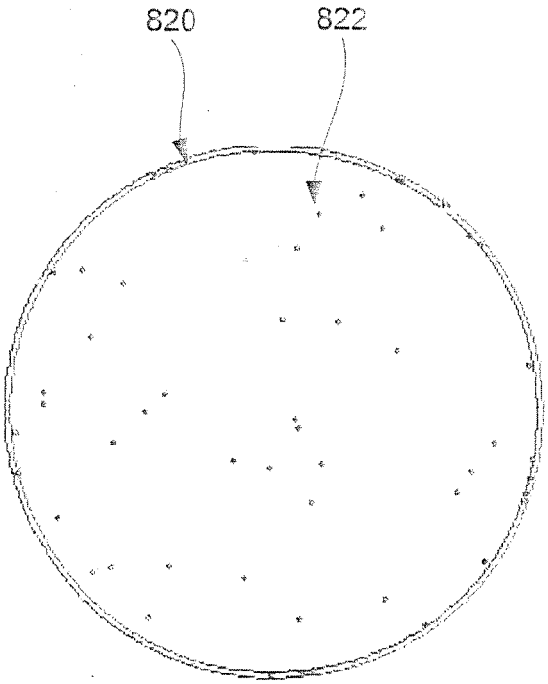

FIG. 8C

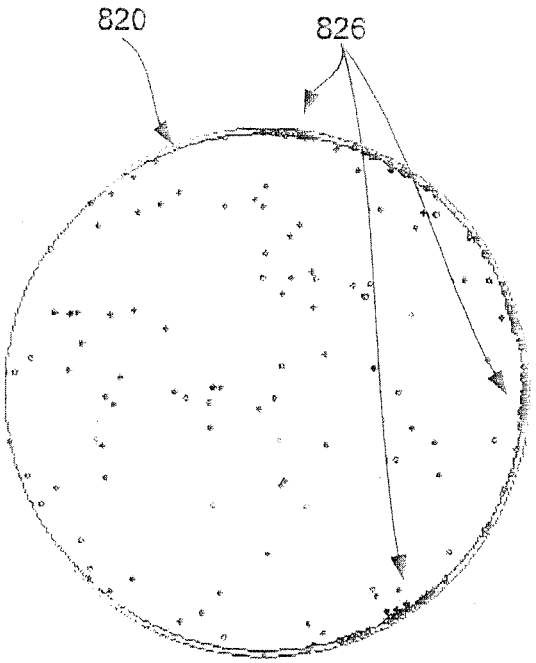

FIG. 8D

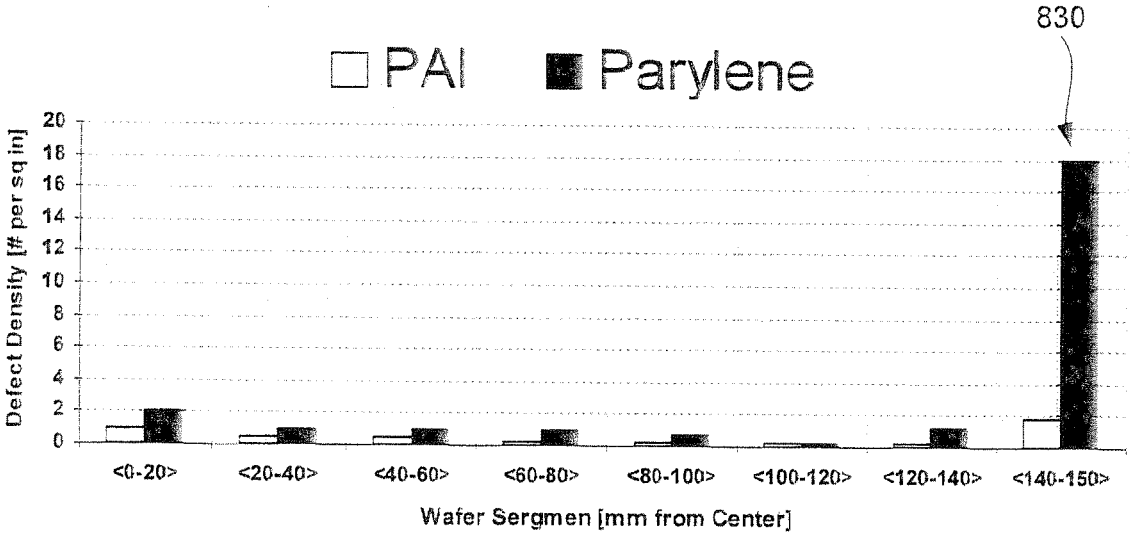

FIG. 8E

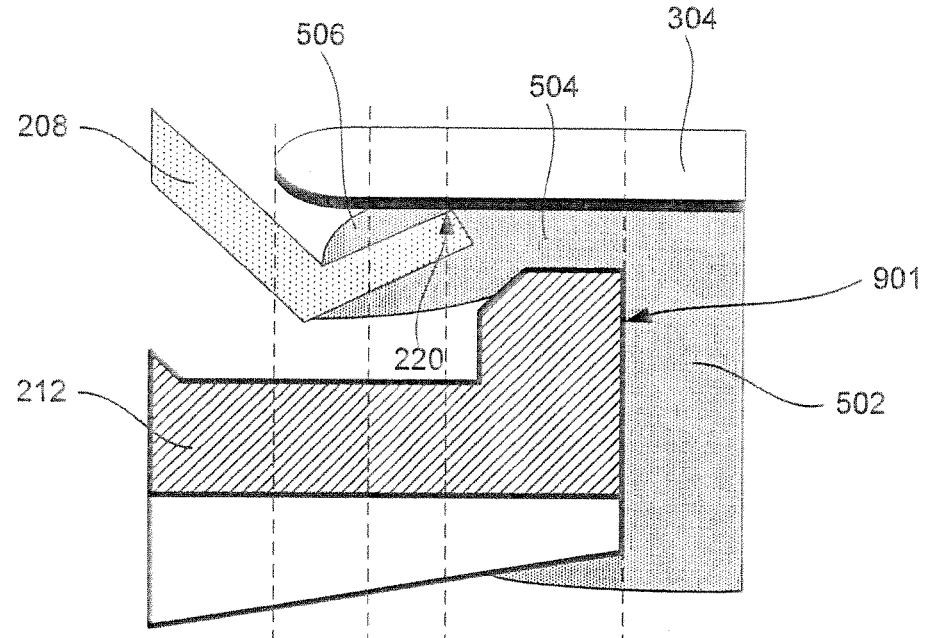
506
304
504
208
901
220
212
502

FIG. 9A

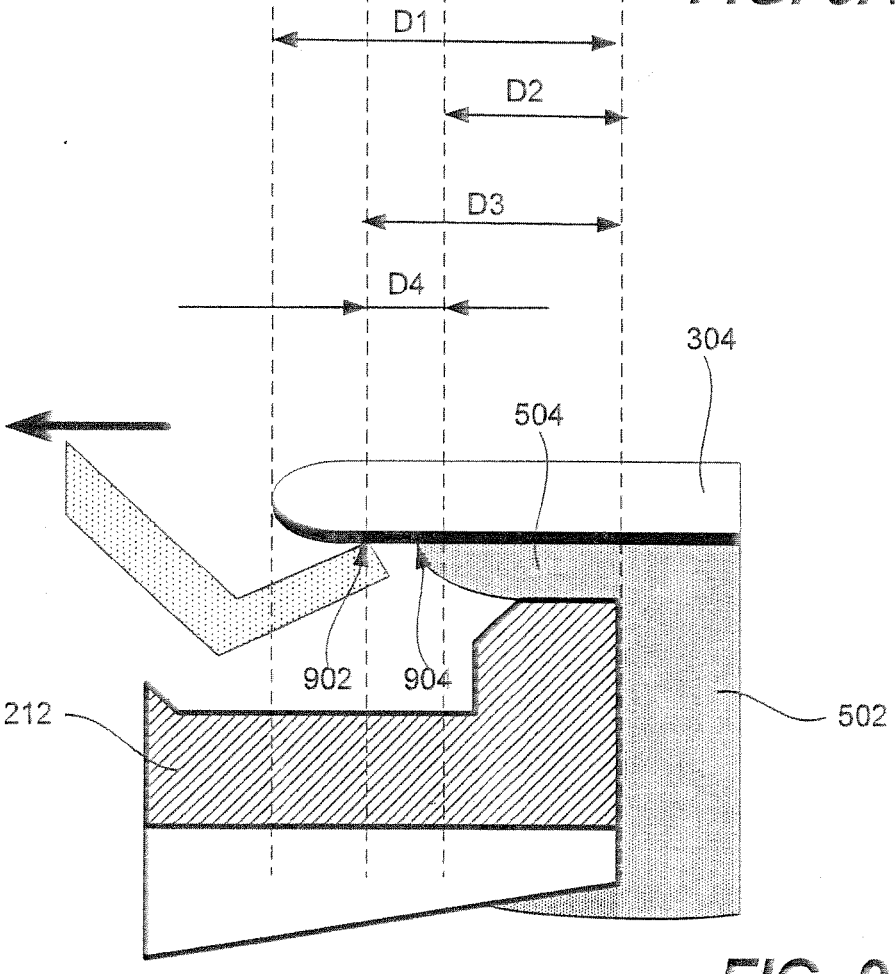
D1
D2
D3
D4
304
504
902
904
212
502

FIG. 9B

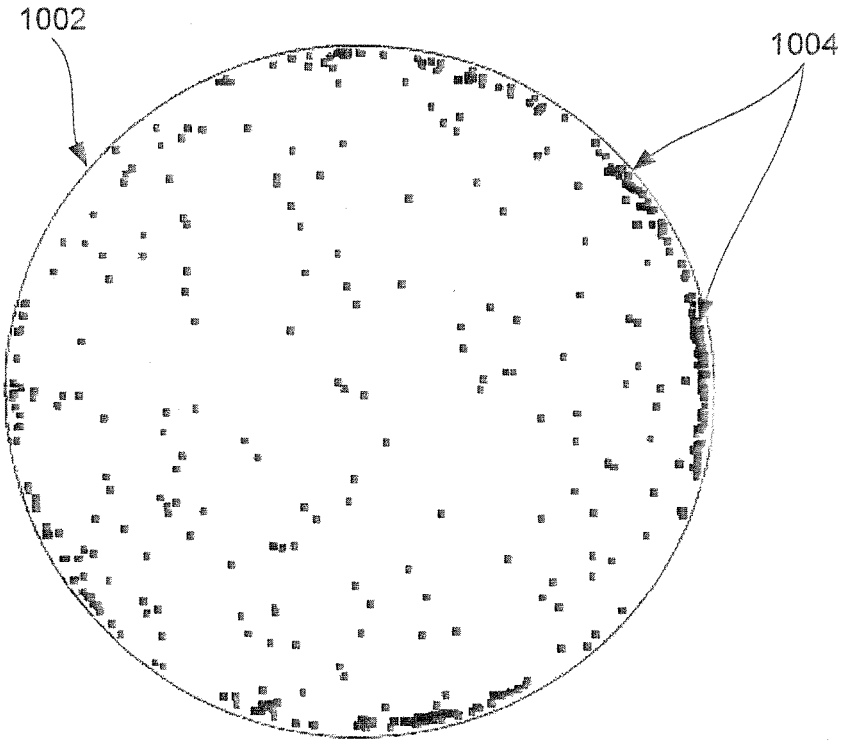

FIG. 10A

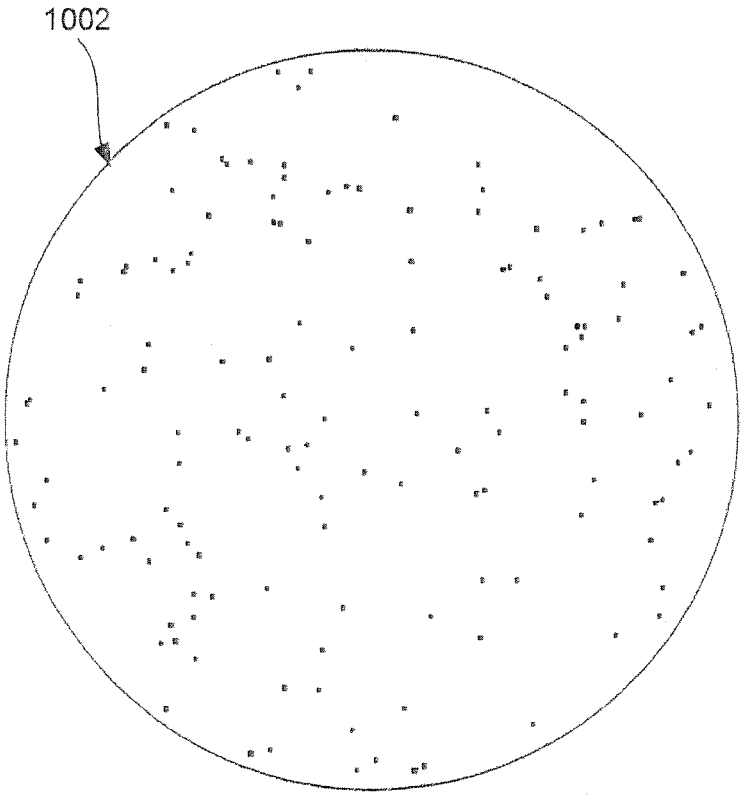

FIG. 10B

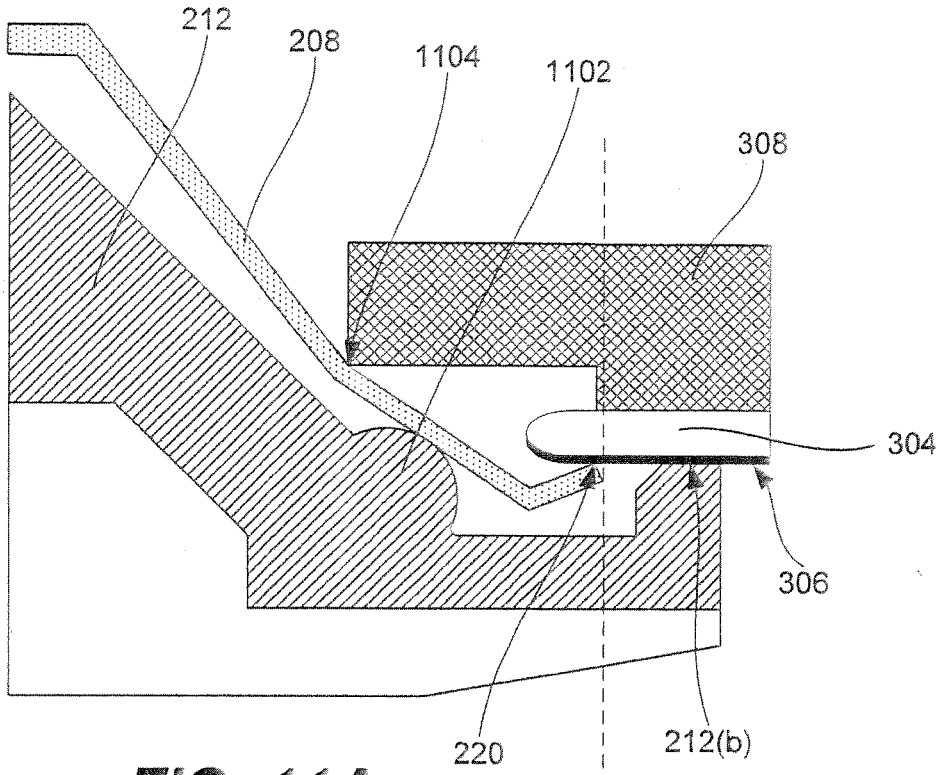

FIG. 11A

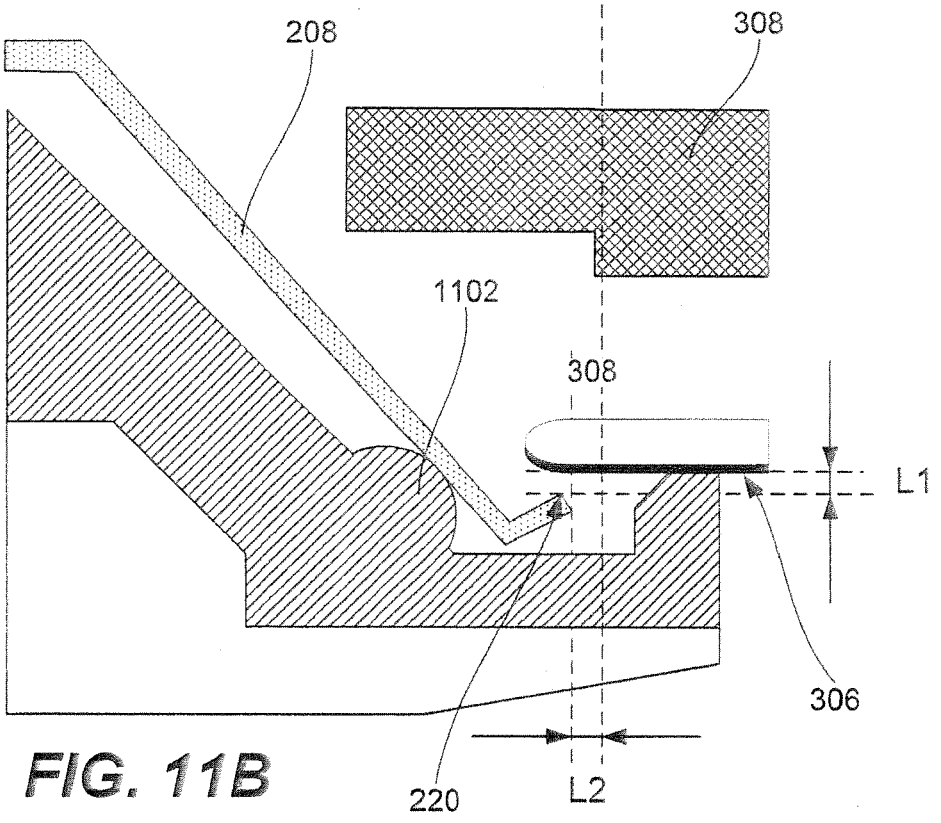

FIG. 11B

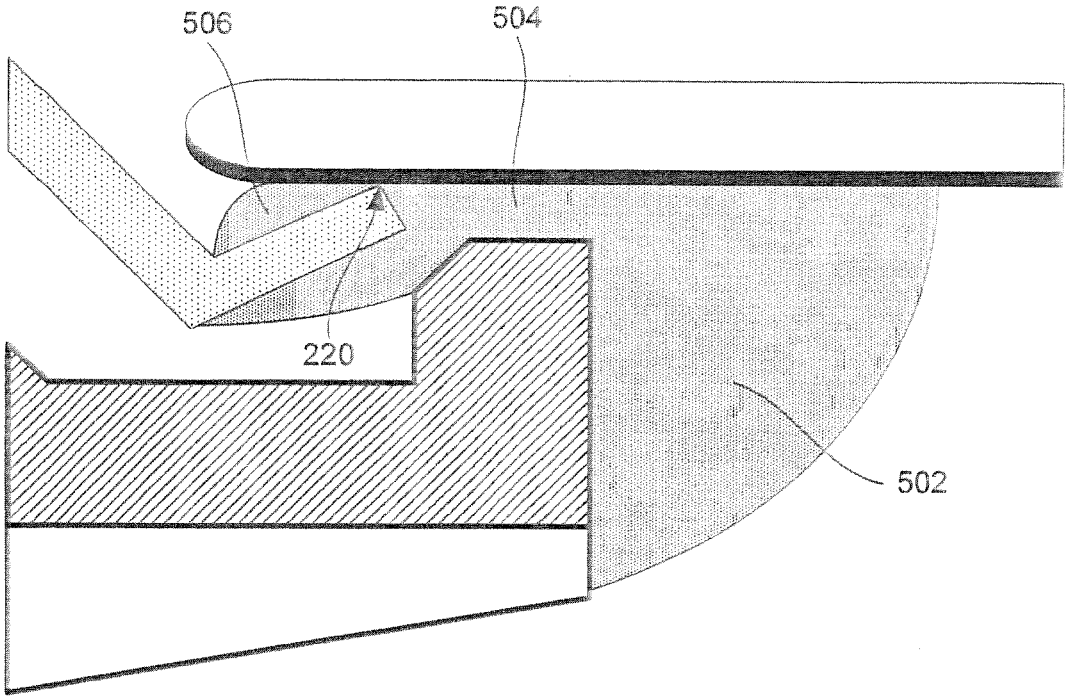

FIG. 12A

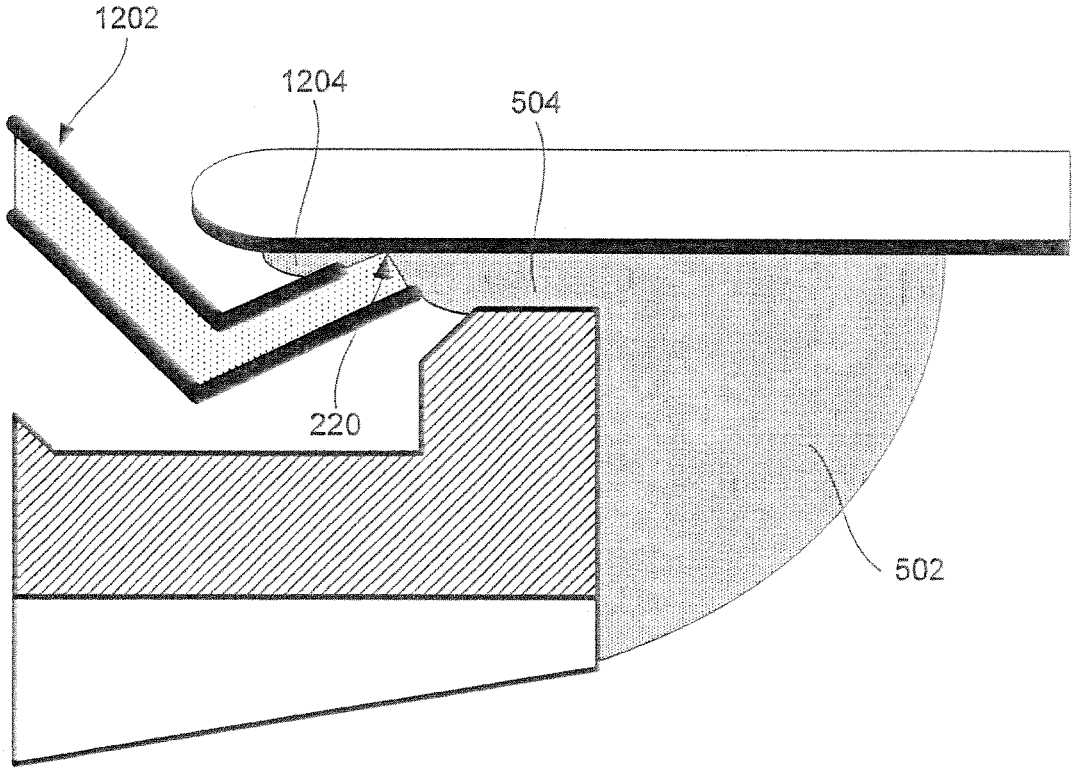

FIG. 12B

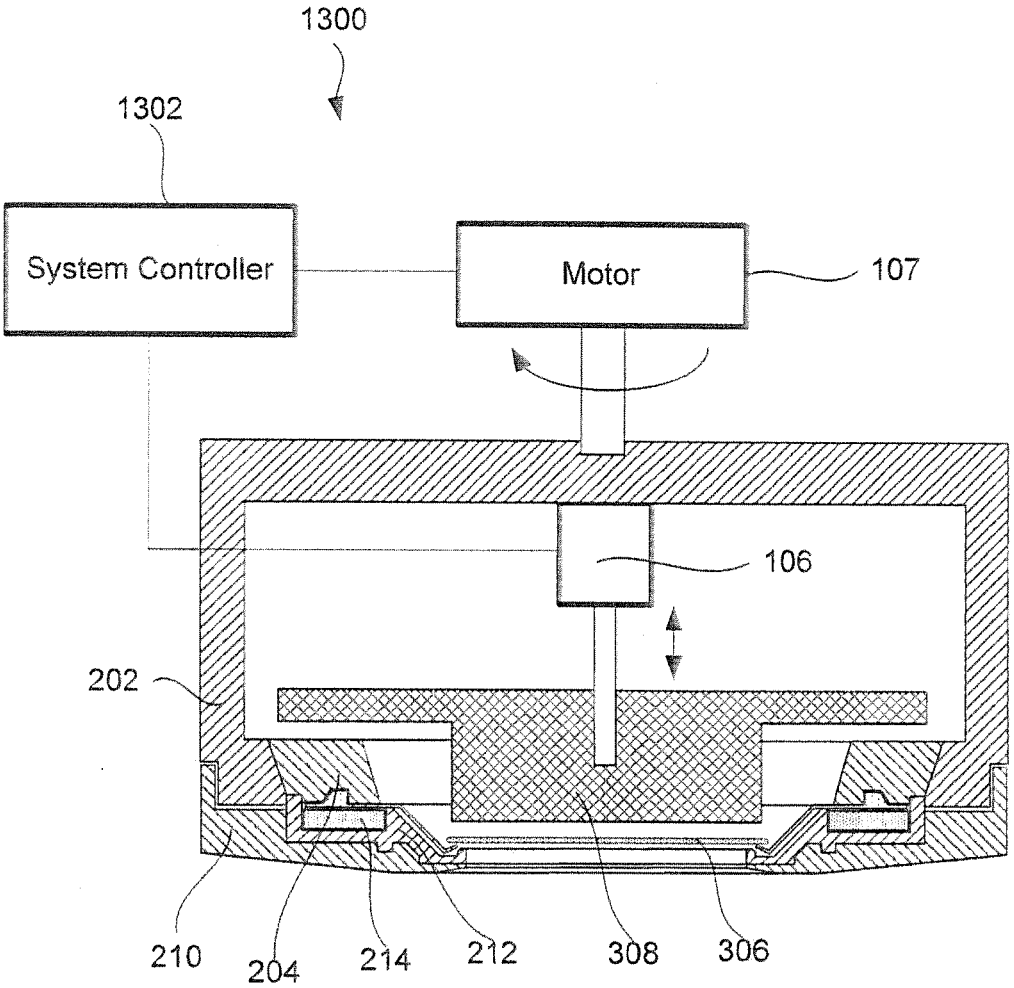
1300
1302
System Controller
Motor
107
106
202
210
204
214
212
308
306

FIG. 13

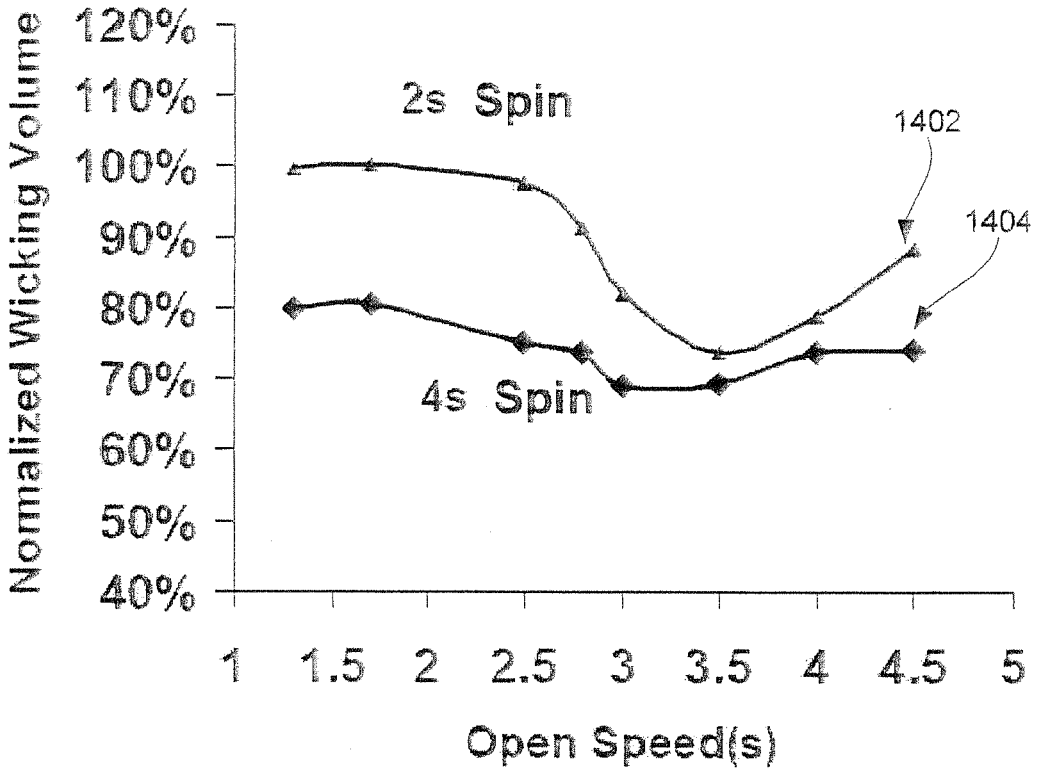

FIG. 14A

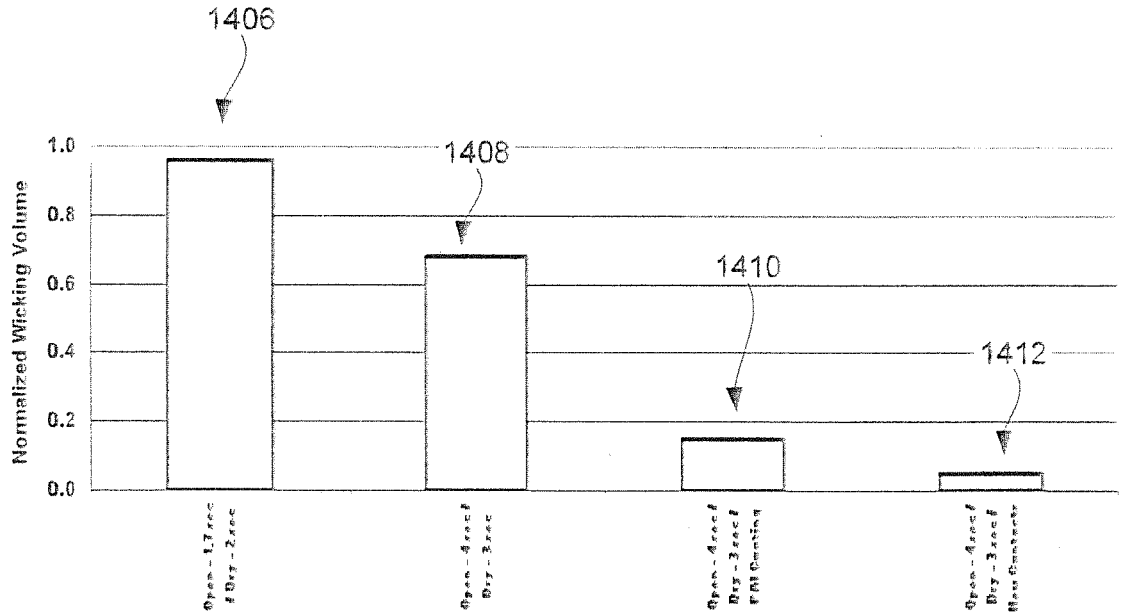

FIG. 14B

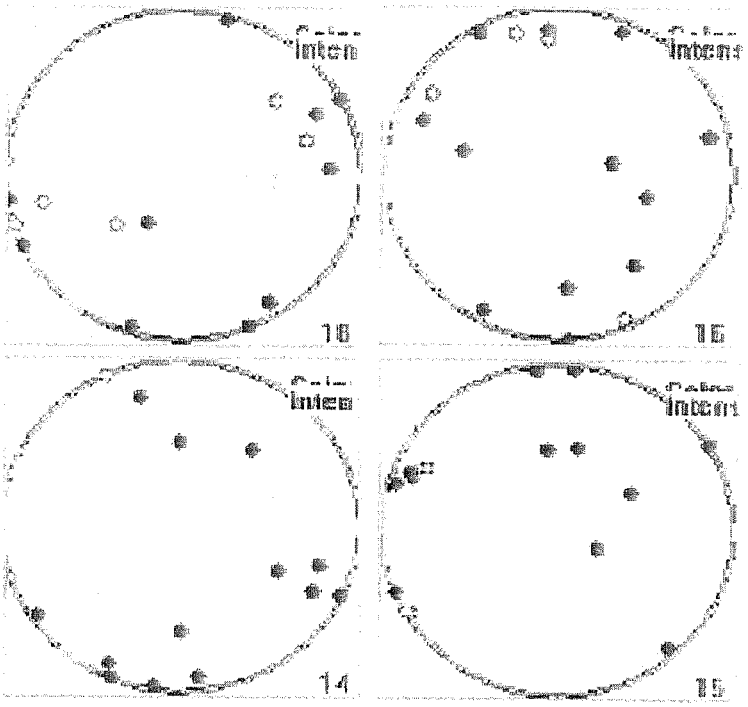

FIG. 15A

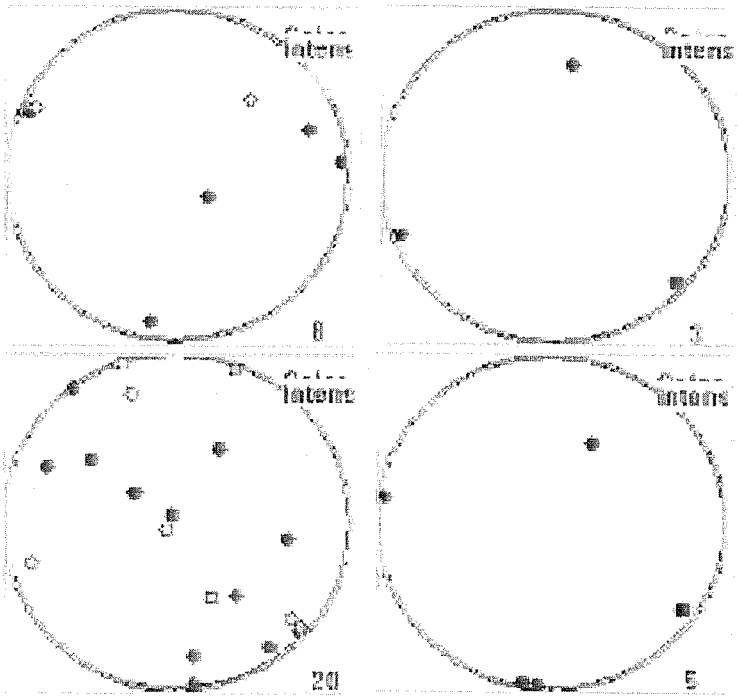

FIG. 15B

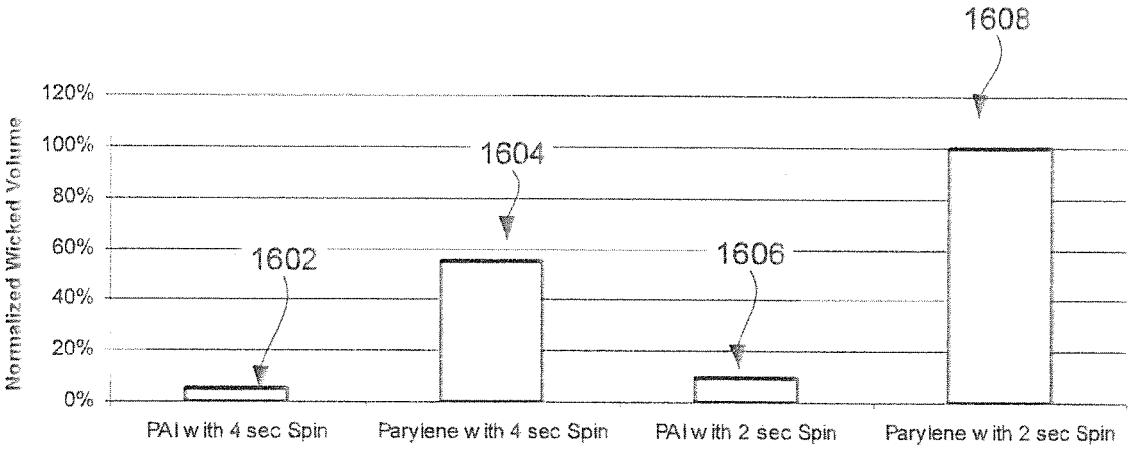
1608
120%
100%
80%
60%
40%
20%
0%
Normalized Wicked Volume
1604
1602
1606
PAI with 4 sec Spin
Parylene with 4 sec Spin
PAI with 2 sec Spin
Parylene with 2 sec Spin

FIG. 16

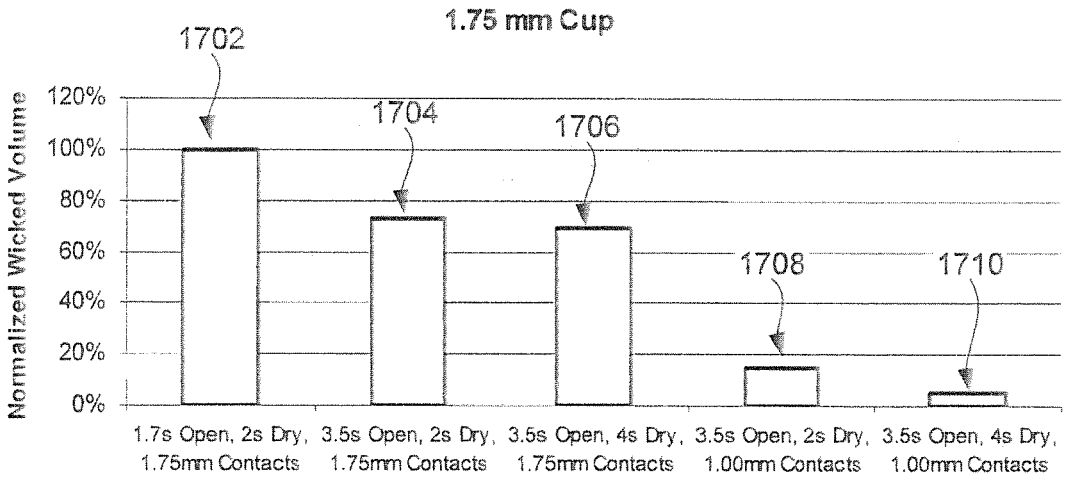

FIG. 17A

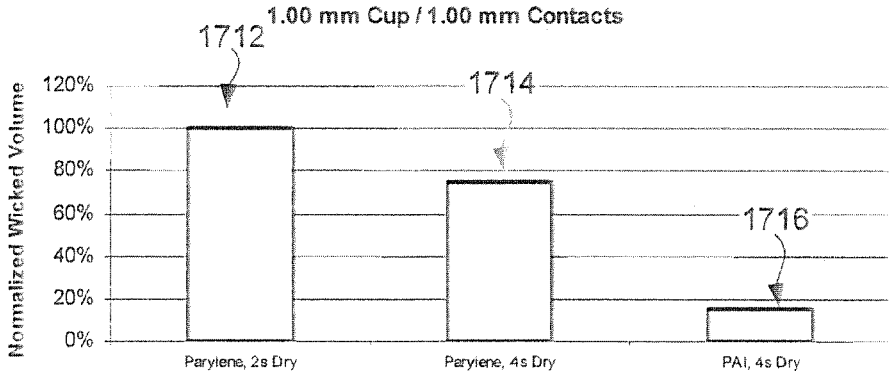

FIG. 17B

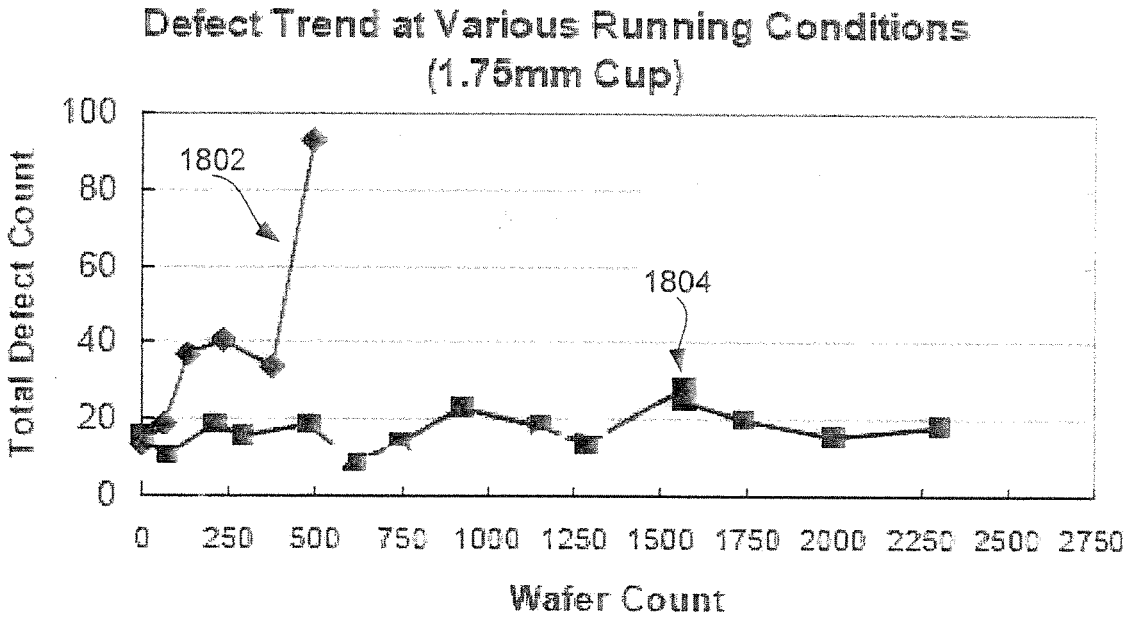

FIG. 18A

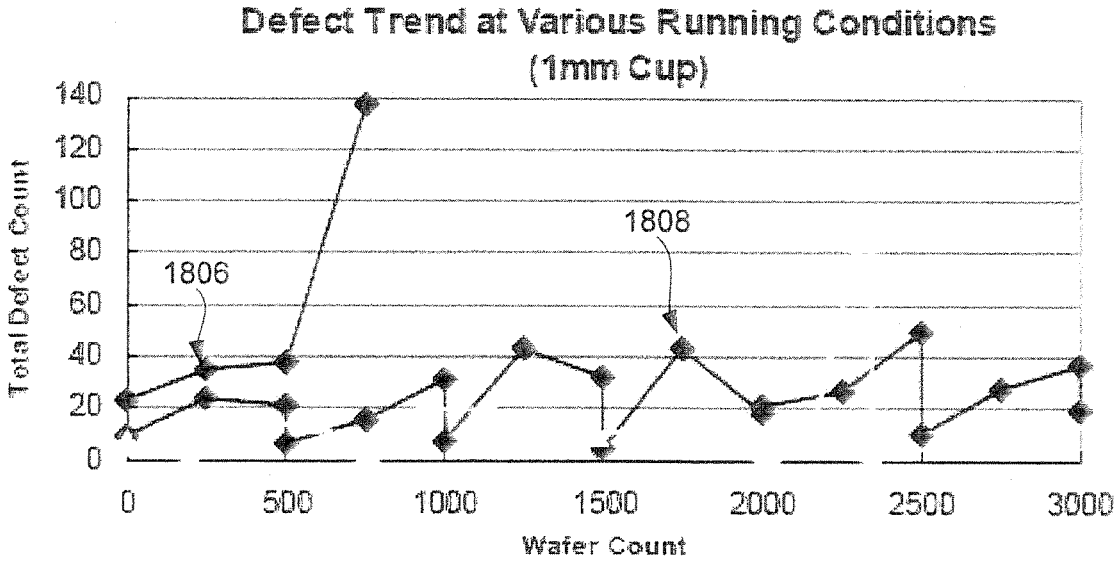

FIG. 18B

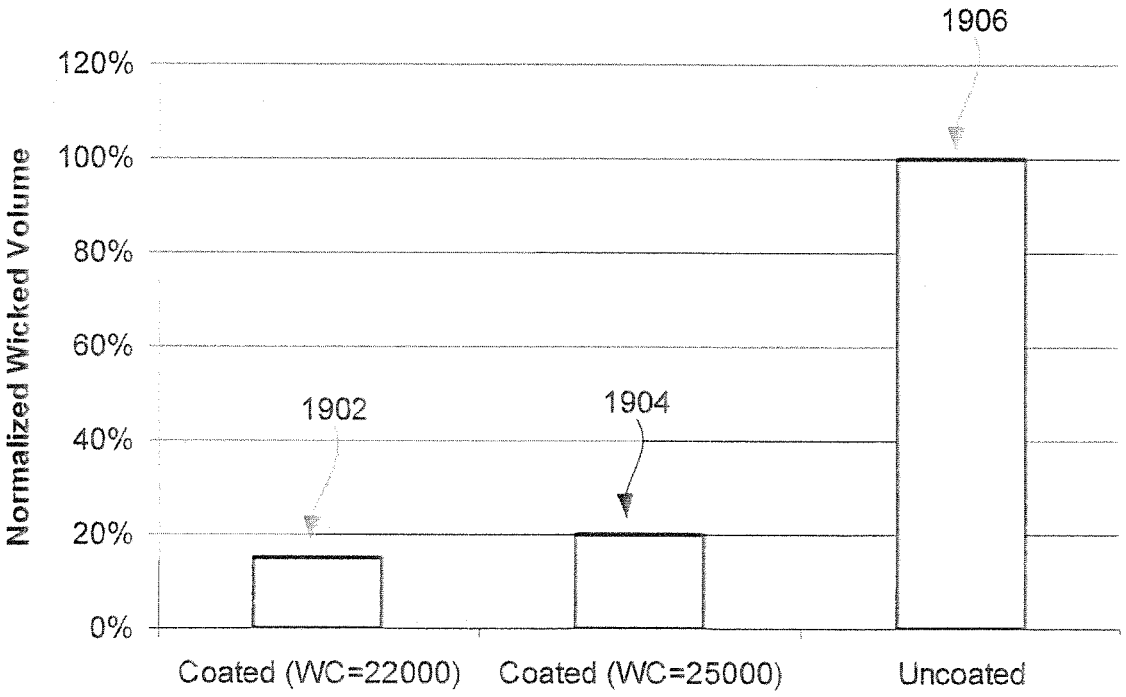
1906
120%
100%
80%
60%
40%
20%
0%
Normalized Wicked Volume
1902
1904
Coated (WC=22000)
Coated (WC=25000)
Uncoated

FIG. 19