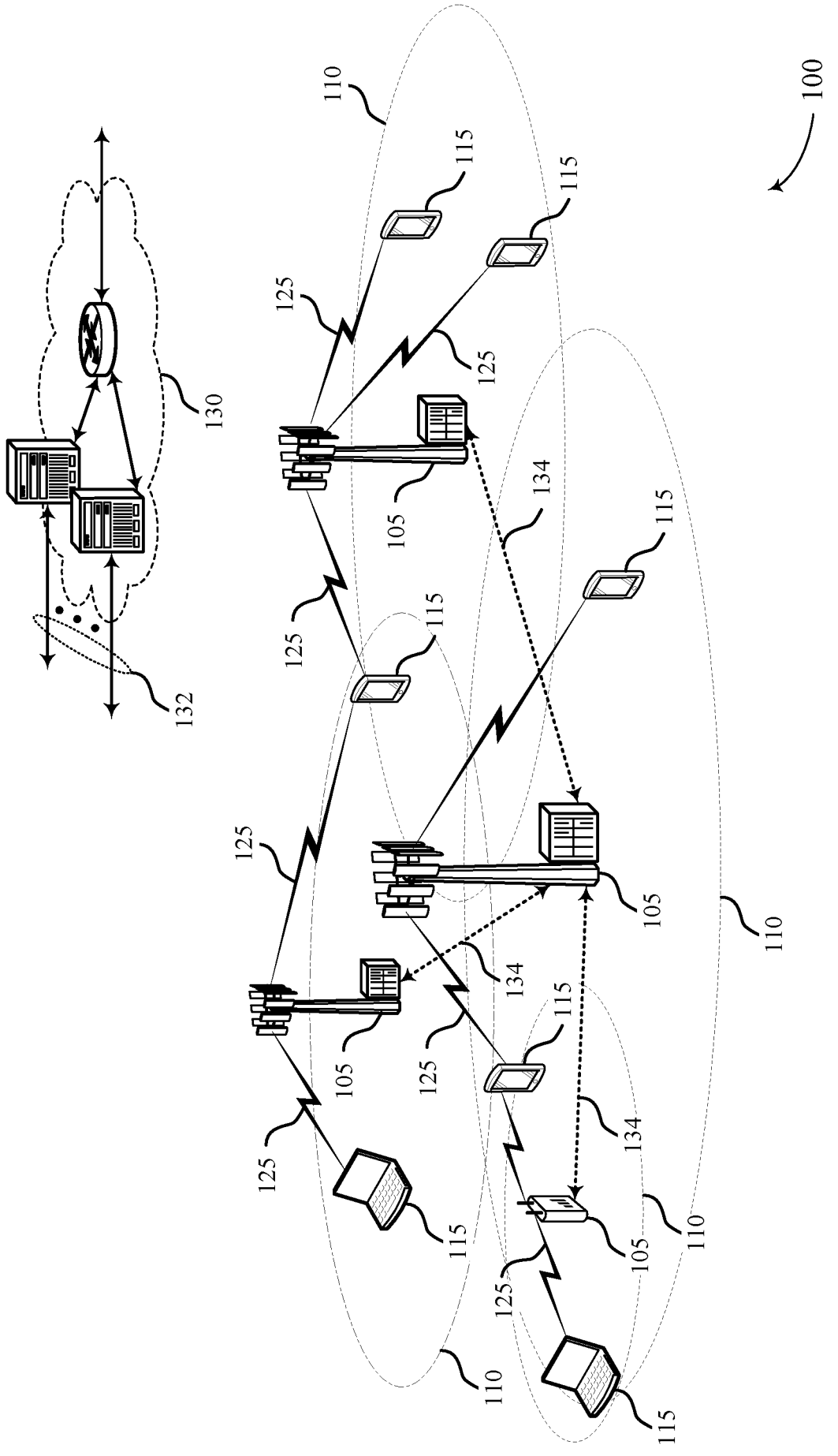

FIG. 1

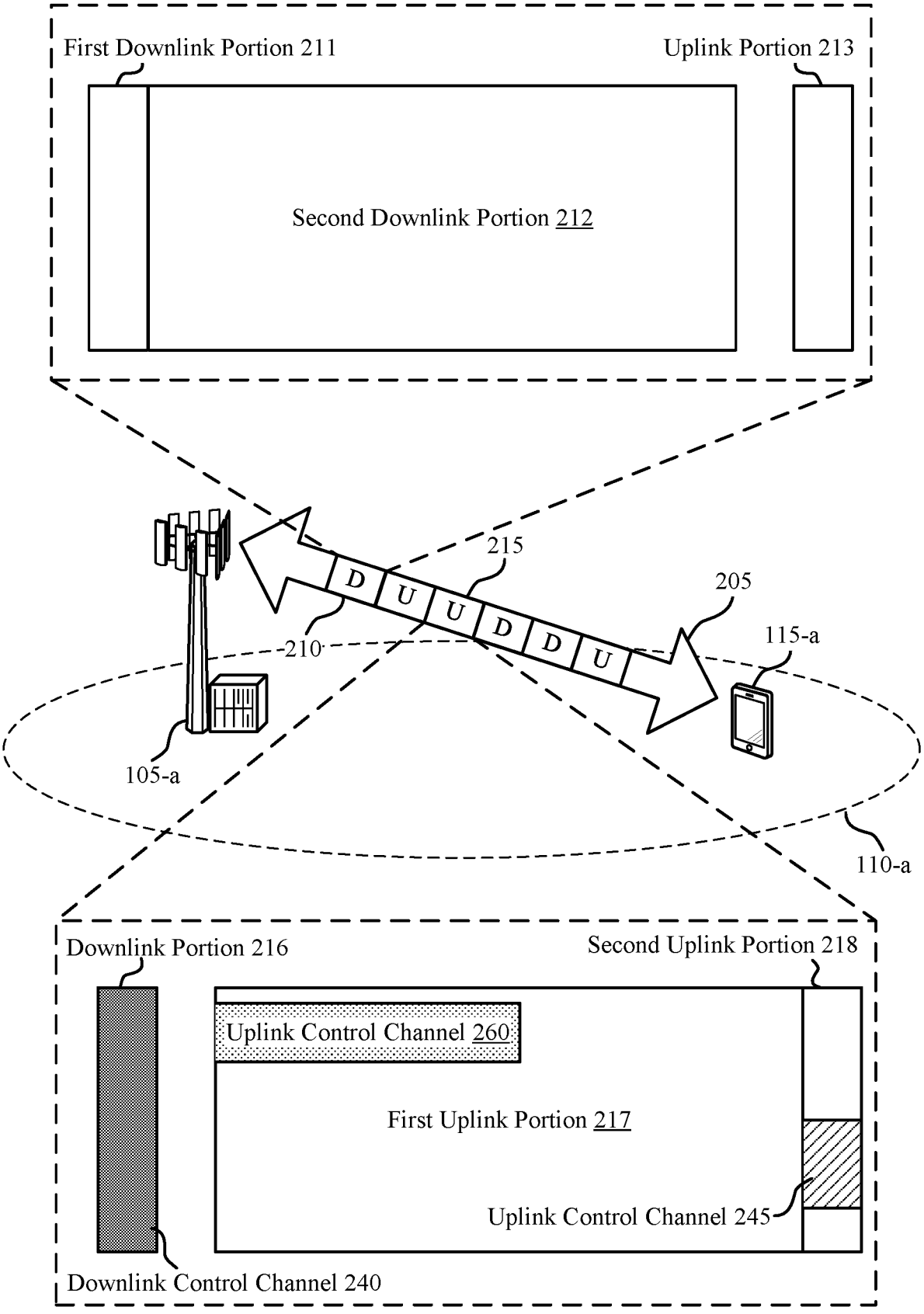
First Downlink Portion 211
Uplink Portion 213
Second Downlink Portion 212
215
205
210
115-a
D
U
U
D
D
U
105-a
110-a
Downlink Portion 216
Second Uplink Portion 218
Uplink Control Channel 260
First Uplink Portion 217
Uplink Control Channel 245
Downlink Control Channel 240

200

FIG. 2

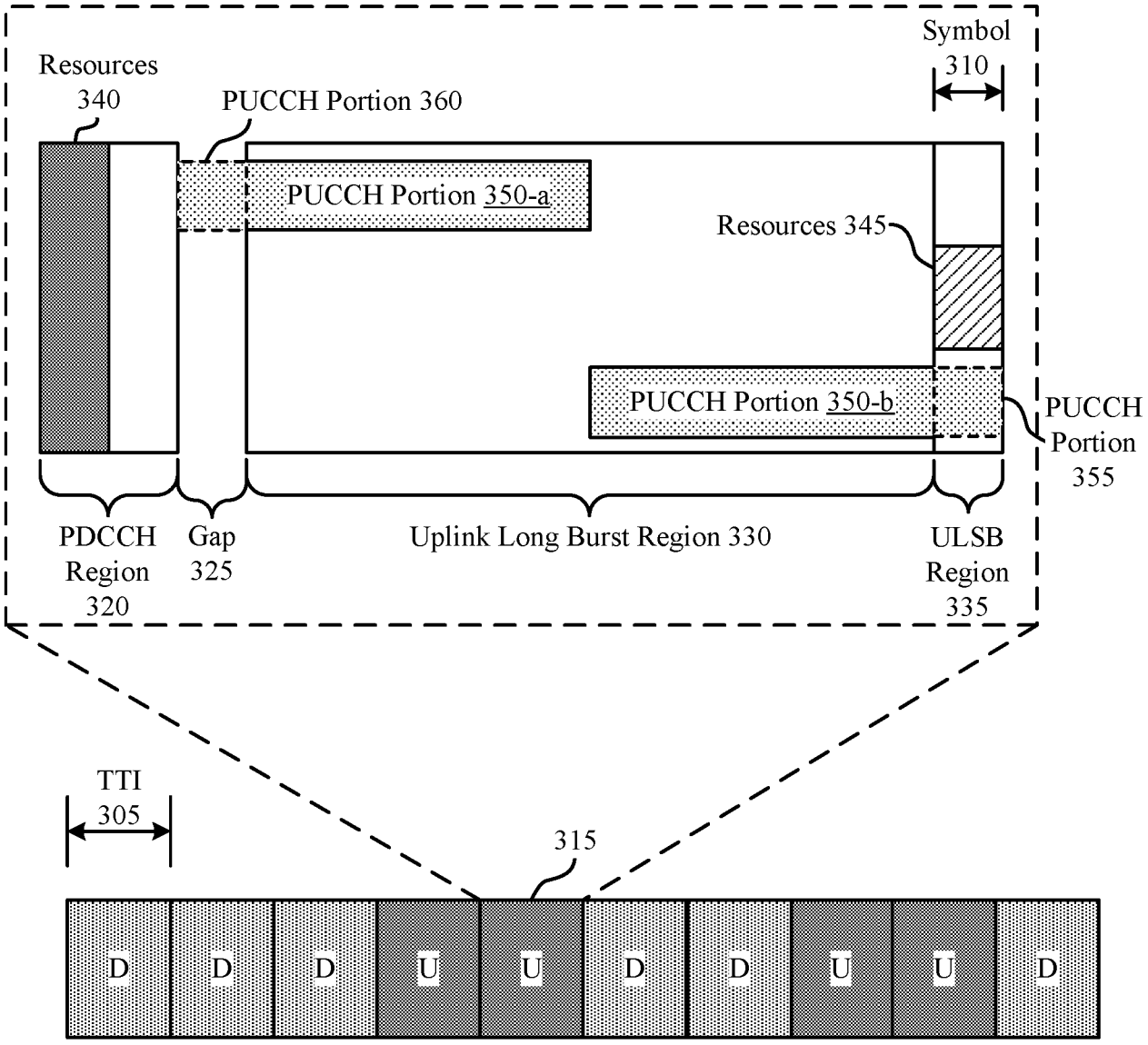
Symbol
310
Resources
340
PUCCH Portion 360
PUCCH Portion 350-a
Resources 345
PUCCH Portion 350-b
PUCCH
Portion
355
PDCCH
Region
320
Gap
325
Uplink Long Burst Region 330
ULSB
Region
335
TTI
305
315
D
D
D
U
U
D
D
U
U
D

300

FIG. 3

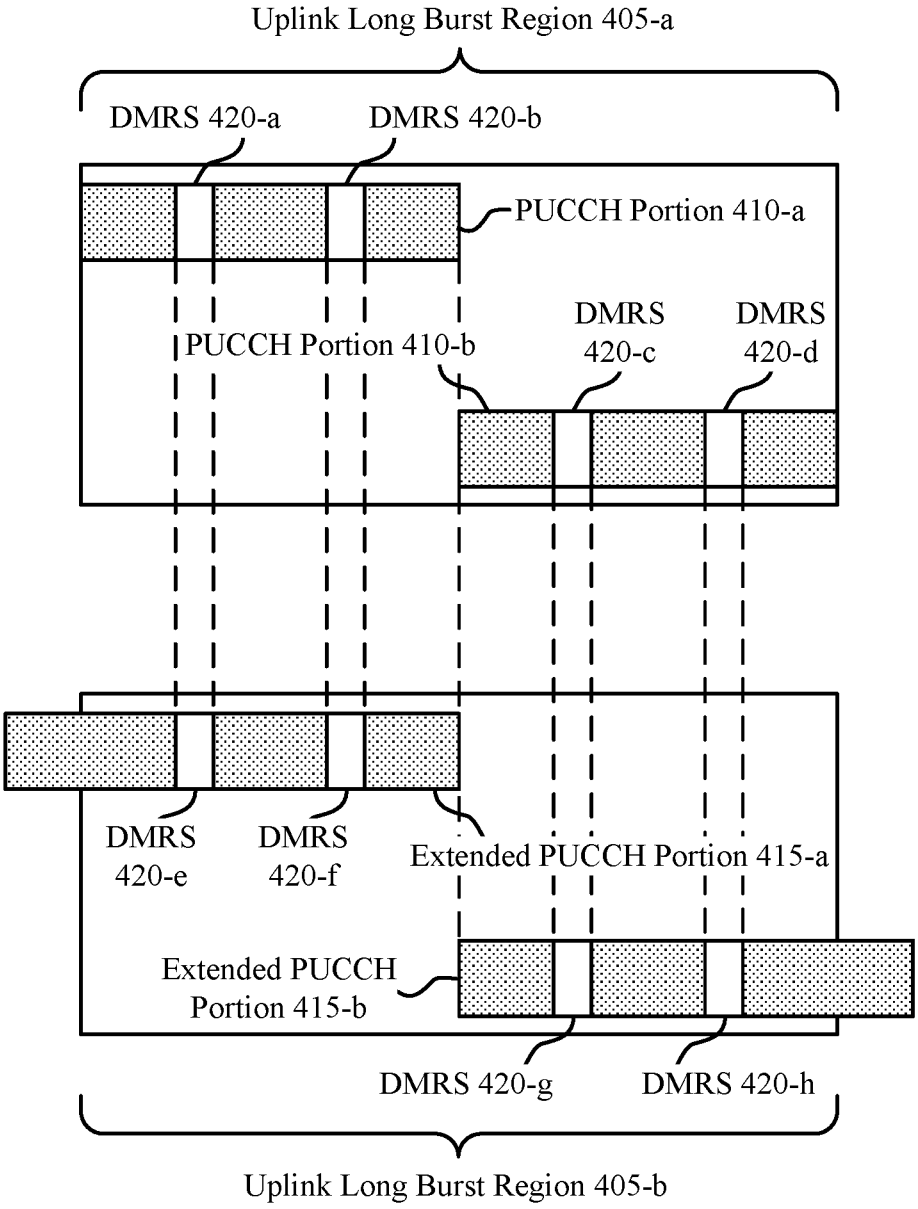
Uplink Long Burst Region 405-a
DMRS 420-a
DMRS 420-b
PUCCH Portion 410-a
PUCCH Portion 410-b
DMRS 420-c
DMRS 420-d
DMRS 420-e
DMRS 420-f
Extended PUCCH Portion 415-a
Extended PUCCH Portion 415-b
DMRS 420-g
DMRS 420-h
Uplink Long Burst Region 405-b

400

FIG. 4

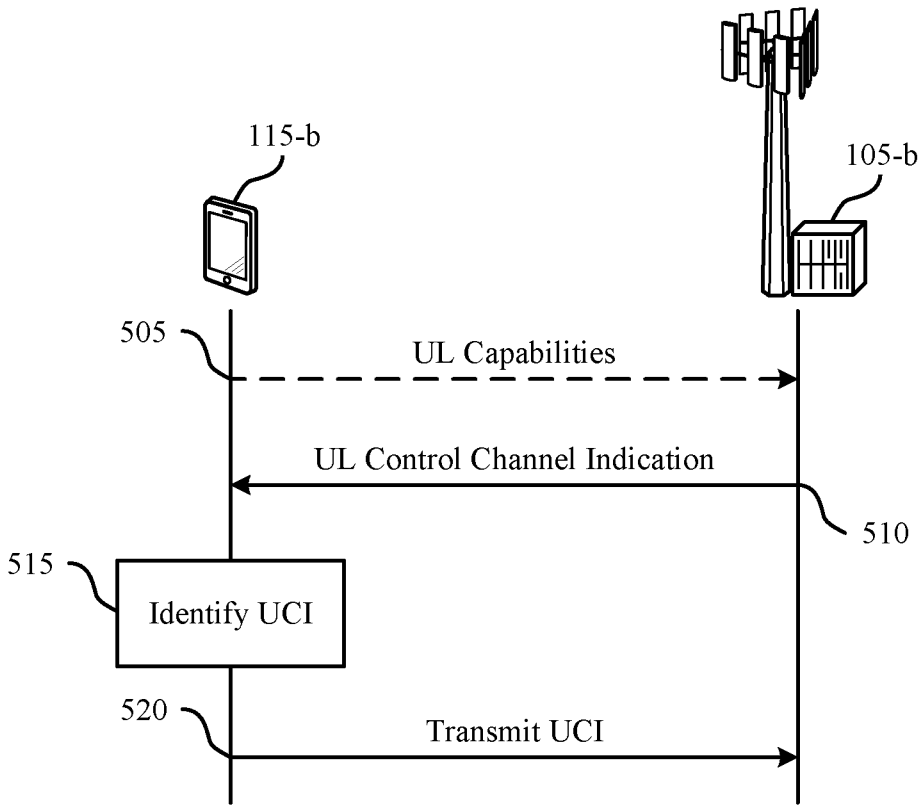
115-b
105-b
505
UL Capabilities
UL Control Channel Indication
510
515
Identify UCI
520
Transmit UCI
500

FIG. 5

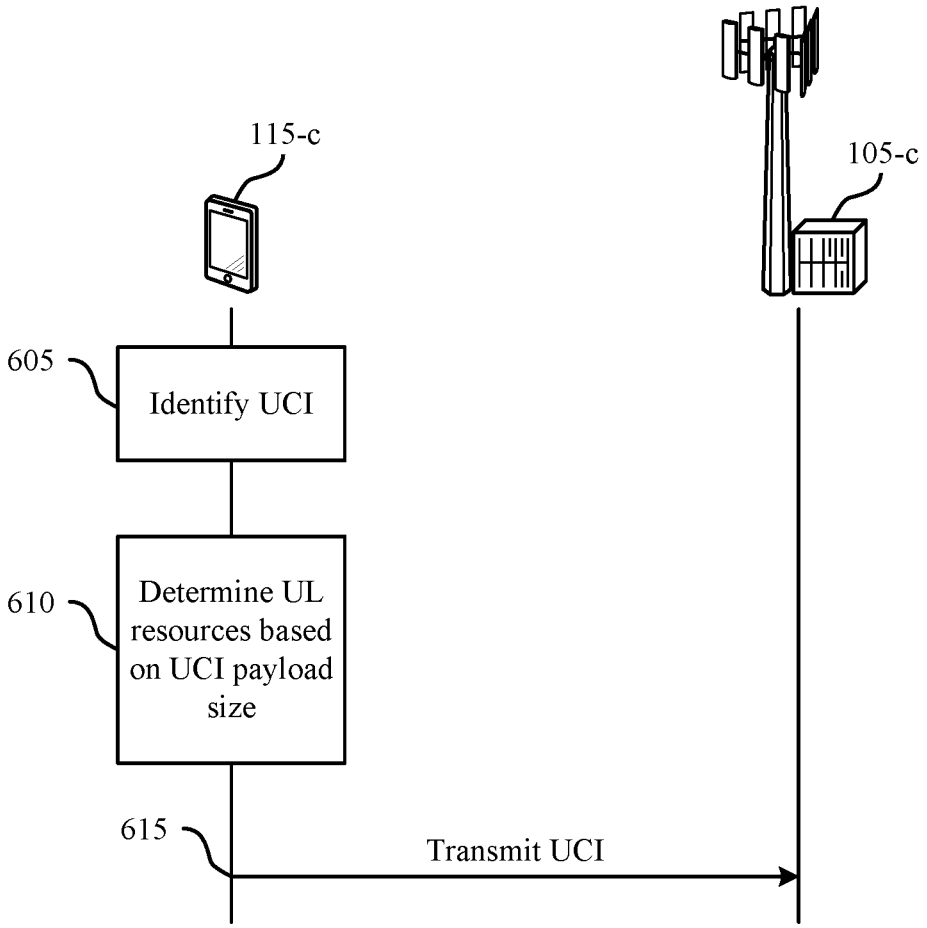
115-c
105-c
605
Identify UCI
610
Determine UL resources based on UCI payload size
615
Transmit UCI
600

FIG. 6

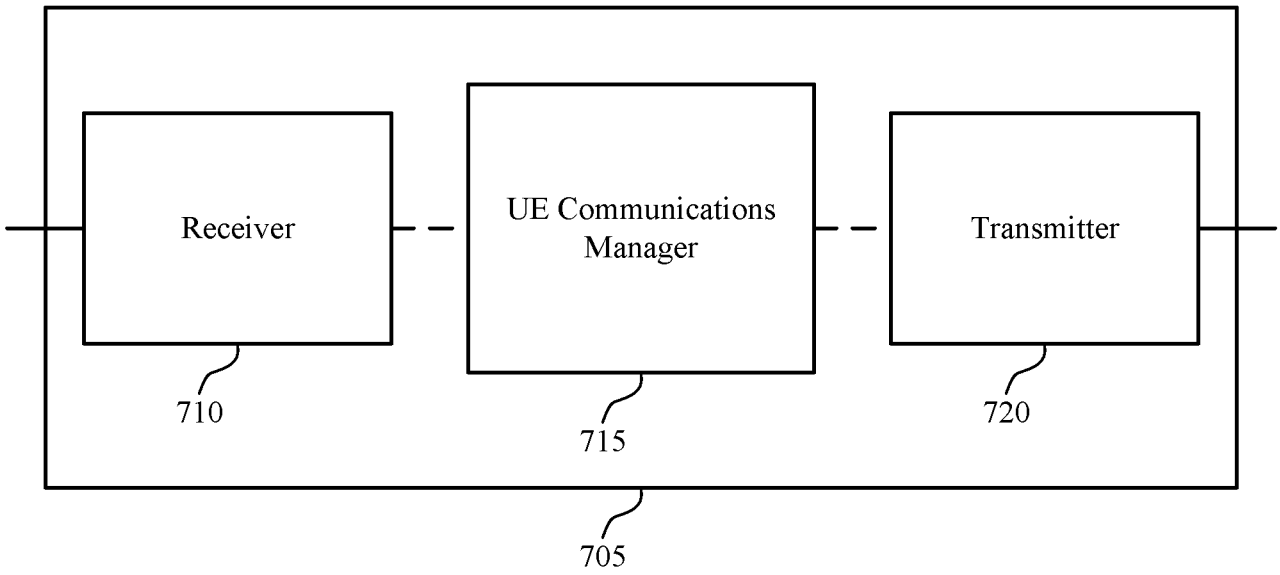
Receiver
UE Communications Manager
Transmitter
710
715
720
705
700

FIG. 7

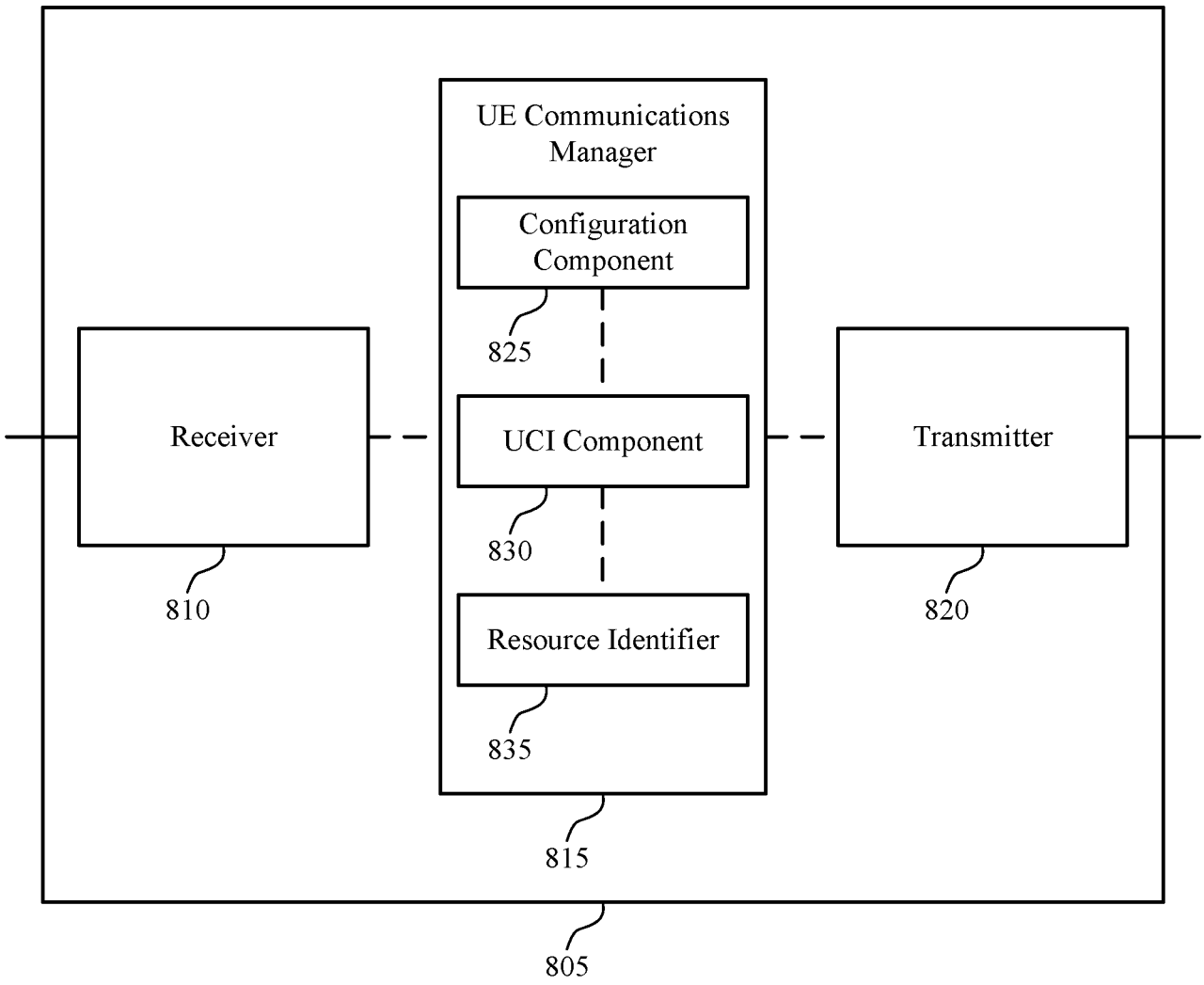
UE Communications Manager
Configuration Component
825
UCI Component
830
Resource Identifier
835
815
Receiver
810
Transmitter
820
805
800

FIG. 8

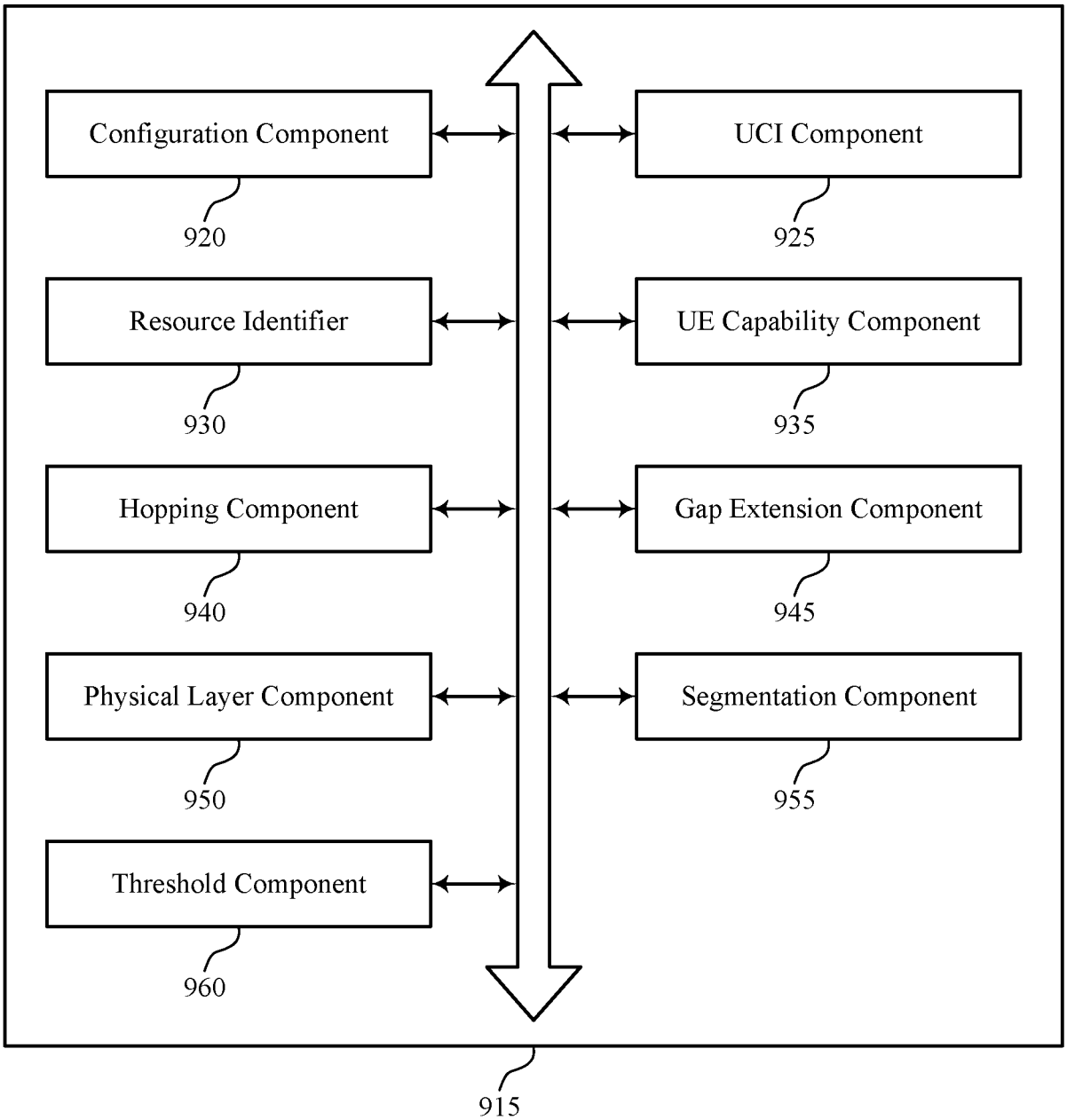
Configuration Component
920
UCI Component
925
Resource Identifier
930
UE Capability Component
935
Hopping Component
940
Gap Extension Component
945
Physical Layer Component
950
Segmentation Component
955
Threshold Component
960
915
900

FIG. 9

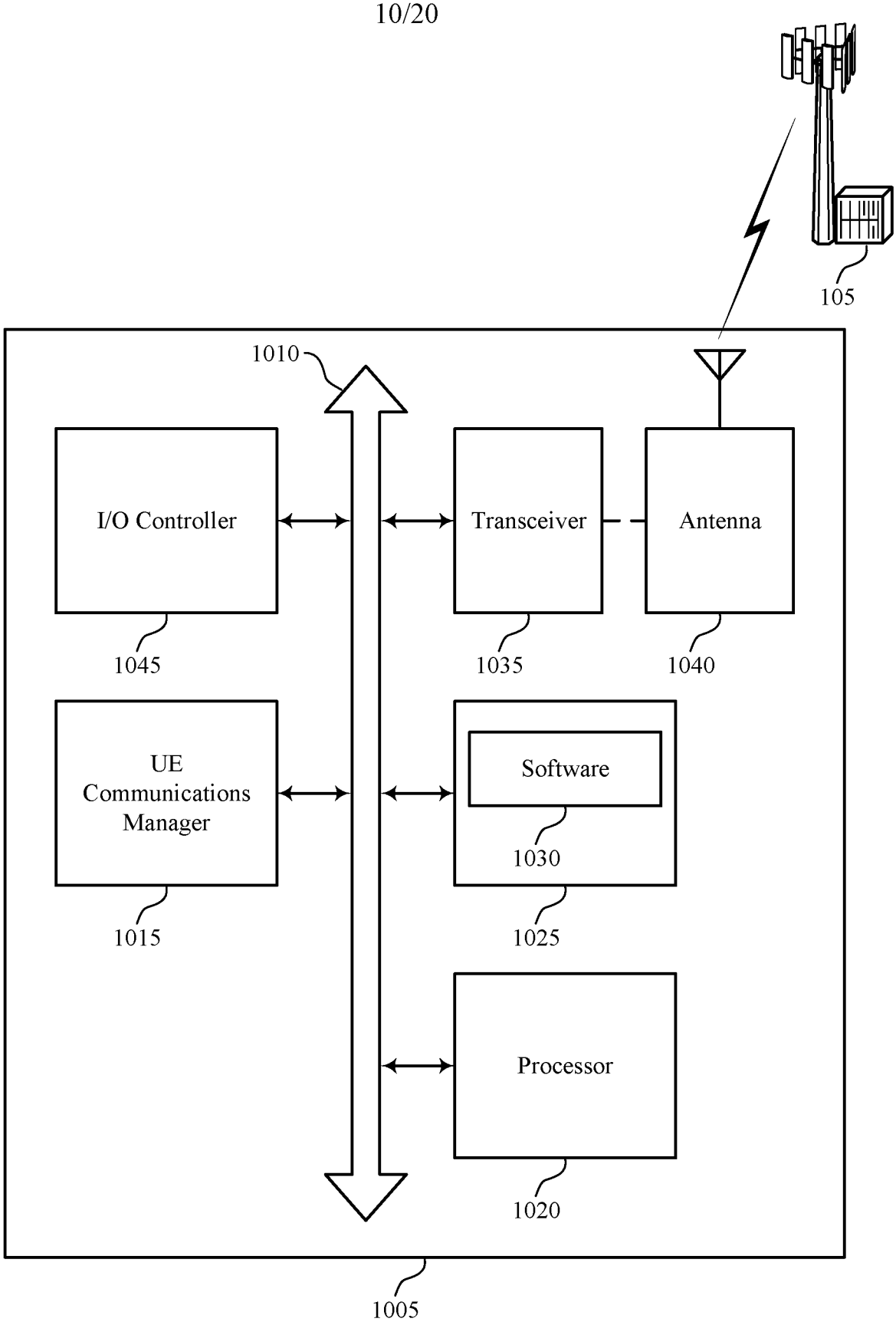
105
1010
I/O Controller
Transceiver
Antenna
1045
1035
1040
UE
Communications
Manager
Software
1030
1015
1025
Processor
1020
1005
1000

FIG. 10

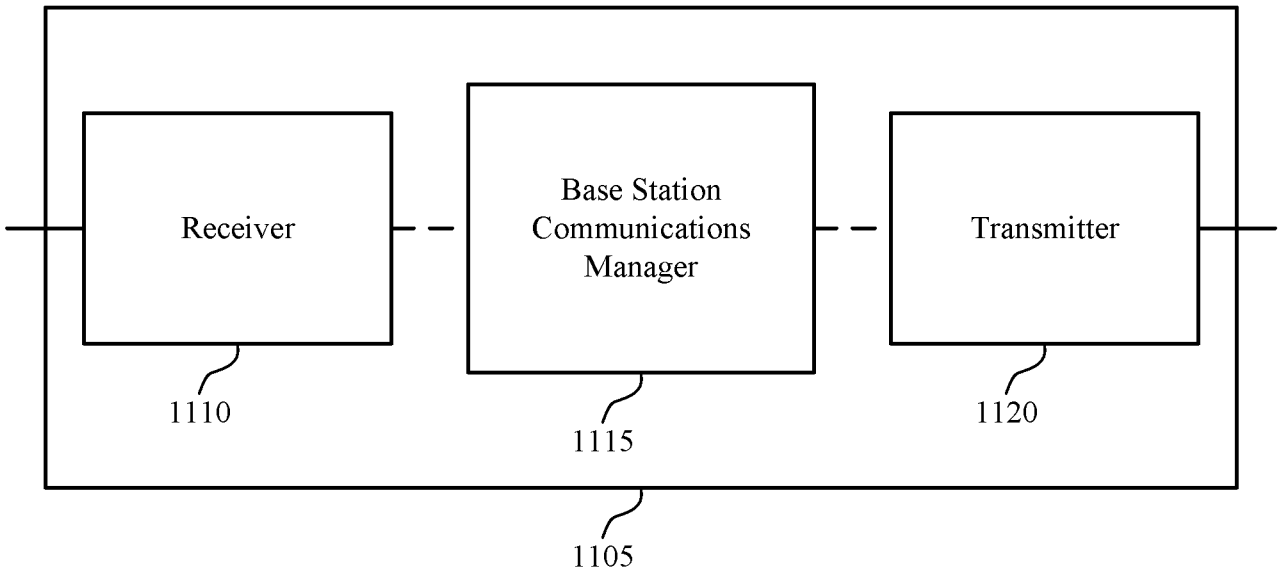
Receiver
Base Station Communications Manager
Transmitter
1110
1115
1120
1105
1100

FIG. 11

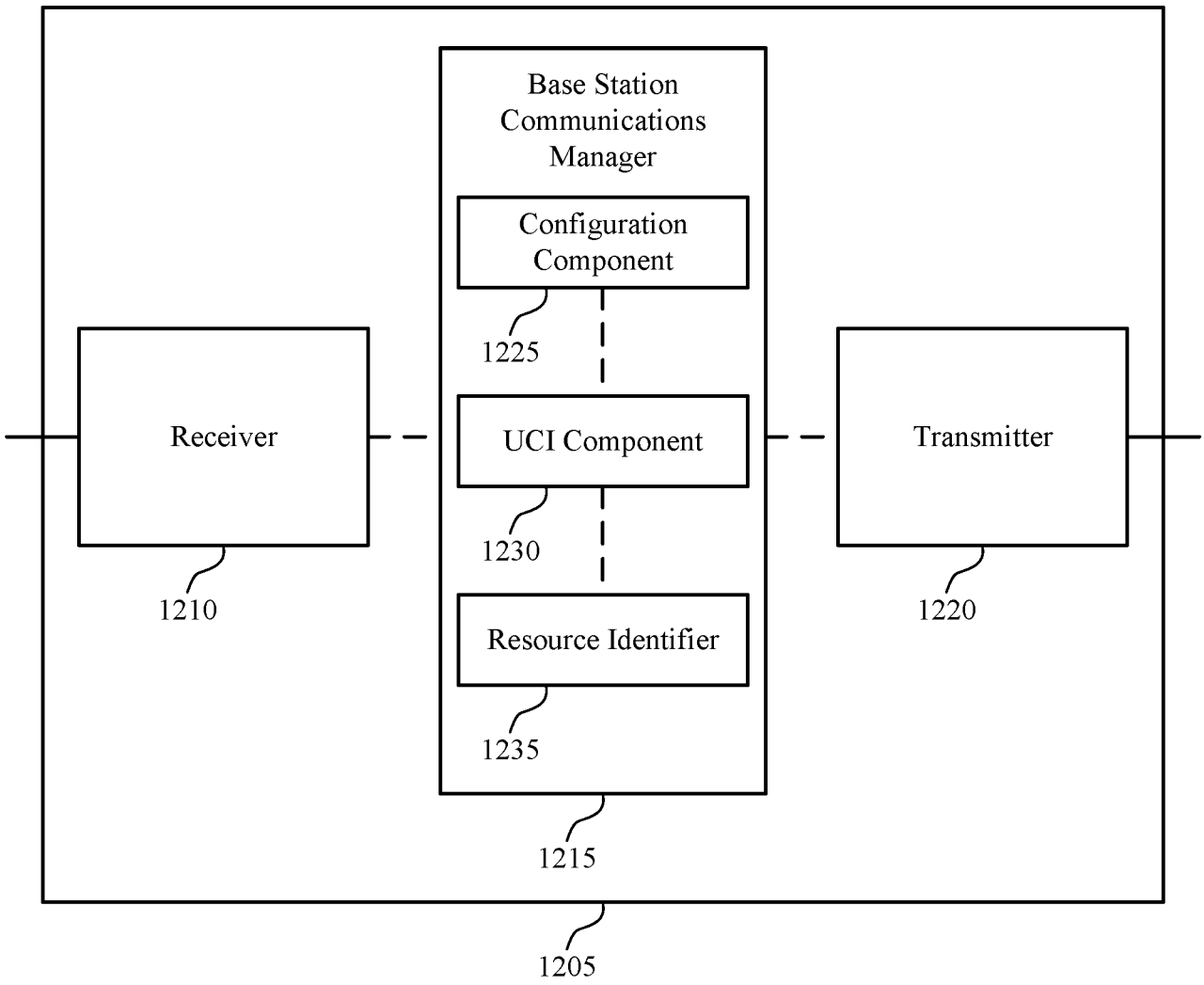
Base Station Communications Manager
Configuration Component
1225
UCI Component
1230
Resource Identifier
1235
1215
Receiver
1210
Transmitter
1220
1205
1200

FIG. 12

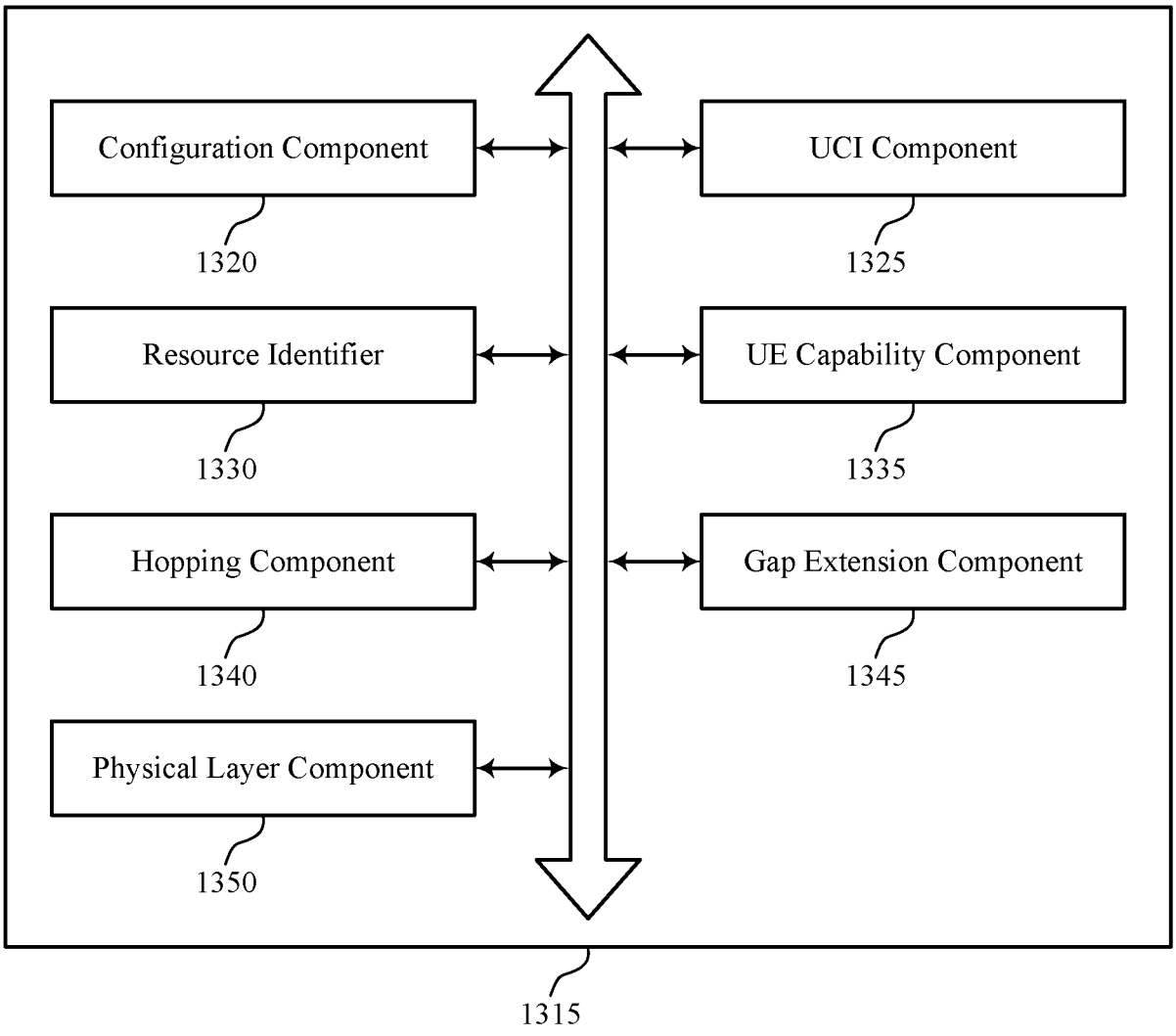
Configuration Component
1320
UCI Component
1325
Resource Identifier
1330
UE Capability Component
1335
Hopping Component
1340
Gap Extension Component
1345
Physical Layer Component
1350
1315
1300

FIG. 13

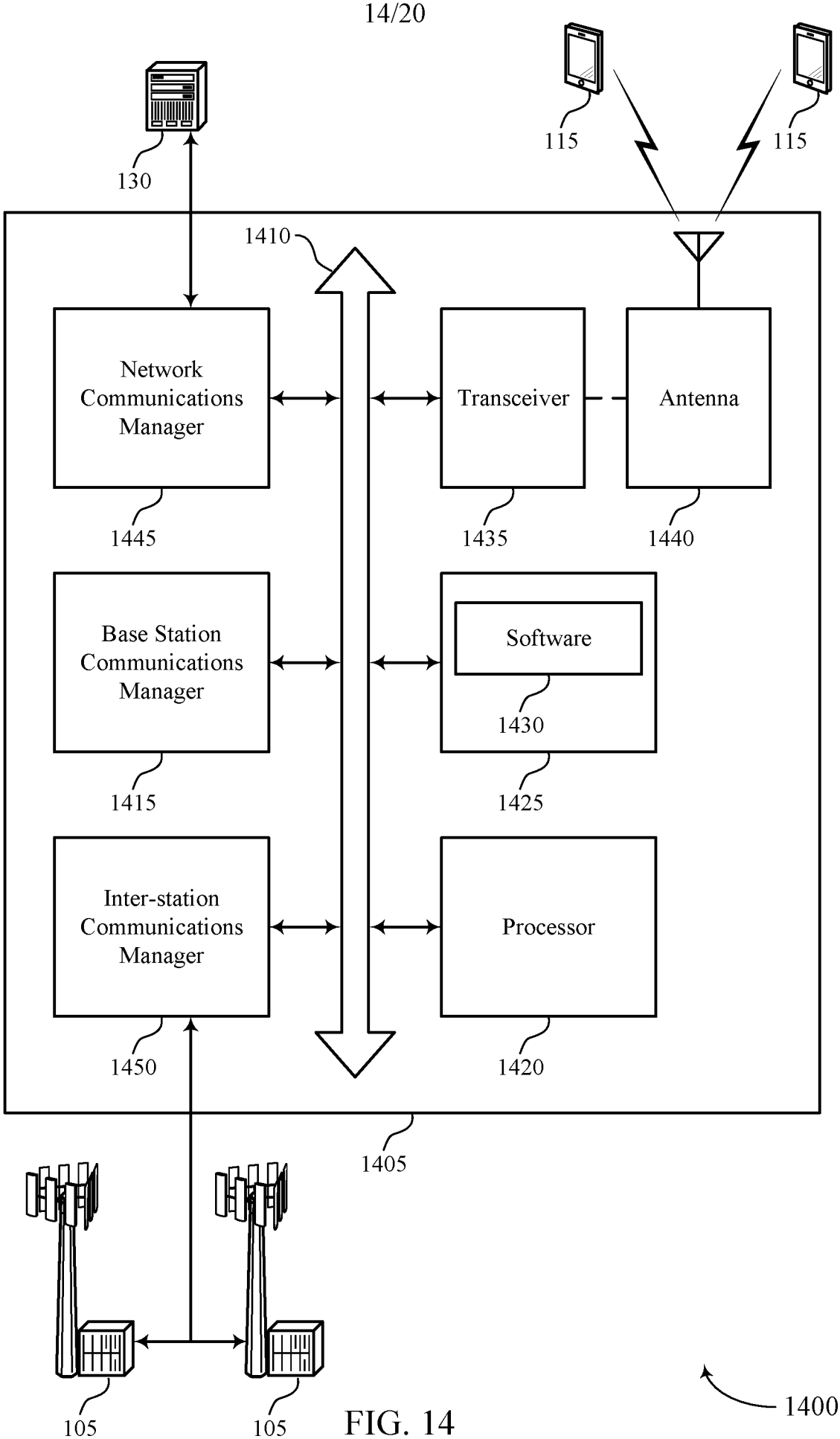
130
115
115
1410
Network Communications Manager
Transceiver
Antenna
1445
1435
1440
Base Station Communications Manager
Software
1430
1415
1425
Inter-station Communications Manager
Processor
1450
1420
1405
105
105
1400

FIG. 14

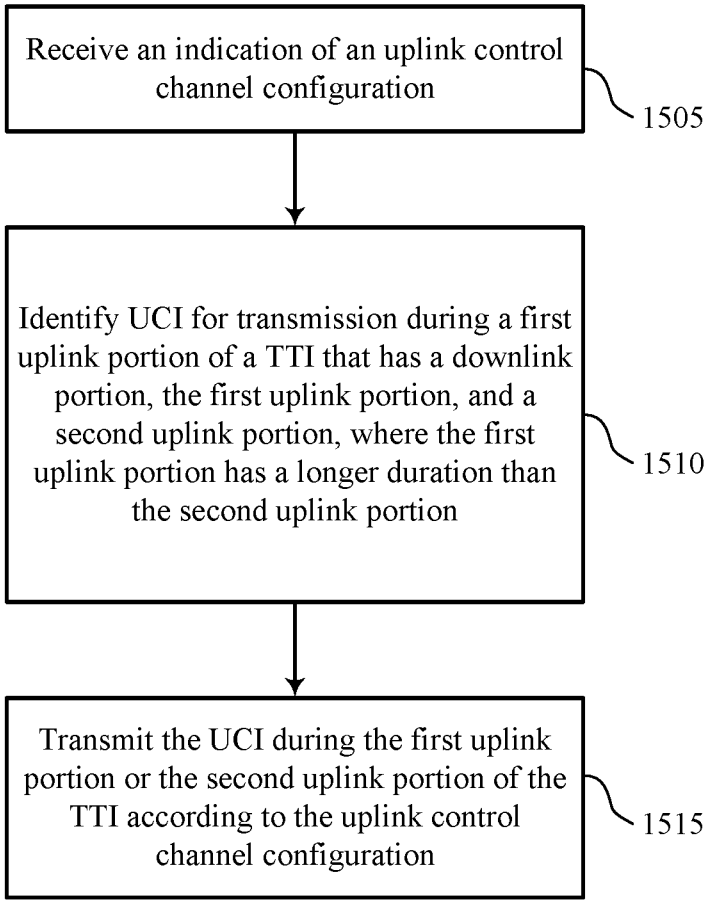
Receive an indication of an uplink control channel configuration
1505
Identify UCI for transmission during a first uplink portion of a TTI that has a downlink portion, the first uplink portion, and a second uplink portion, where the first uplink portion has a longer duration than the second uplink portion
1510
Transmit the UCI during the first uplink portion or the second uplink portion of the TTI according to the uplink control channel configuration
1515
1500

FIG. 15

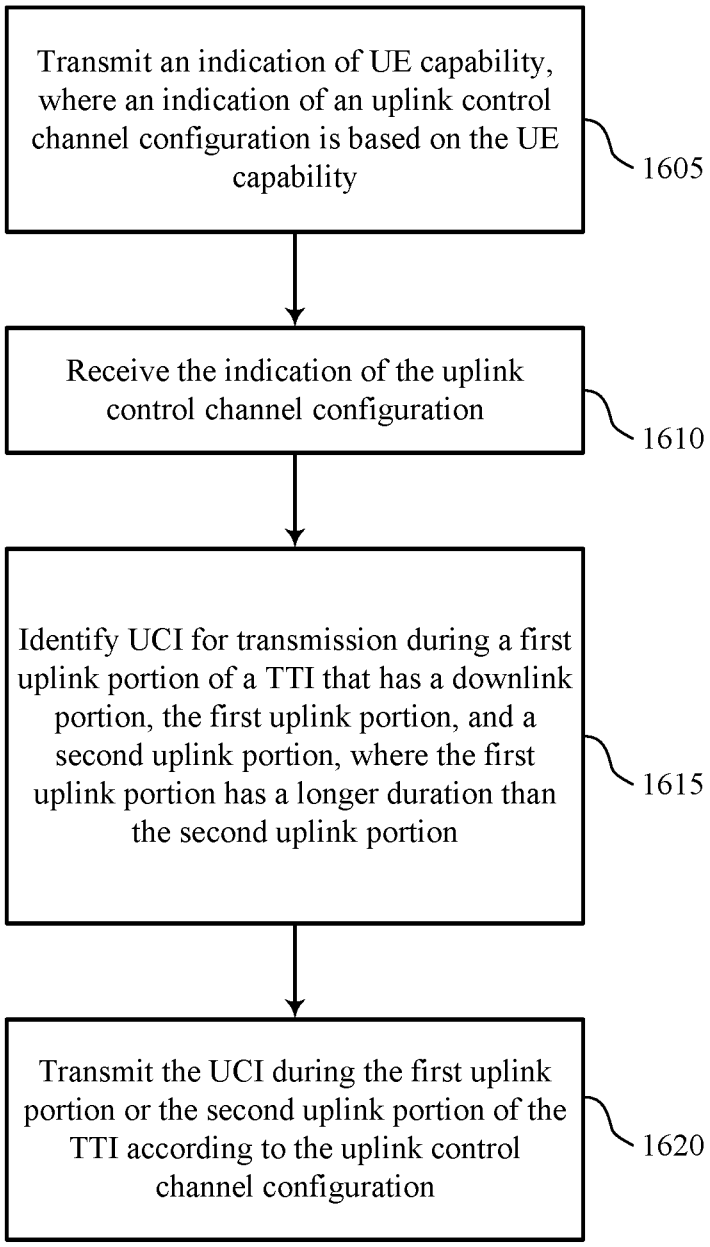
Transmit an indication of UE capability, where an indication of an uplink control channel configuration is based on the UE capability
1605
Receive the indication of the uplink control channel configuration
1610
Identify UCI for transmission during a first uplink portion of a TTI that has a downlink portion, the first uplink portion, and a second uplink portion, where the first uplink portion has a longer duration than the second uplink portion
1615
Transmit the UCI during the first uplink portion or the second uplink portion of the TTI according to the uplink control channel configuration
1620
1600

FIG. 16

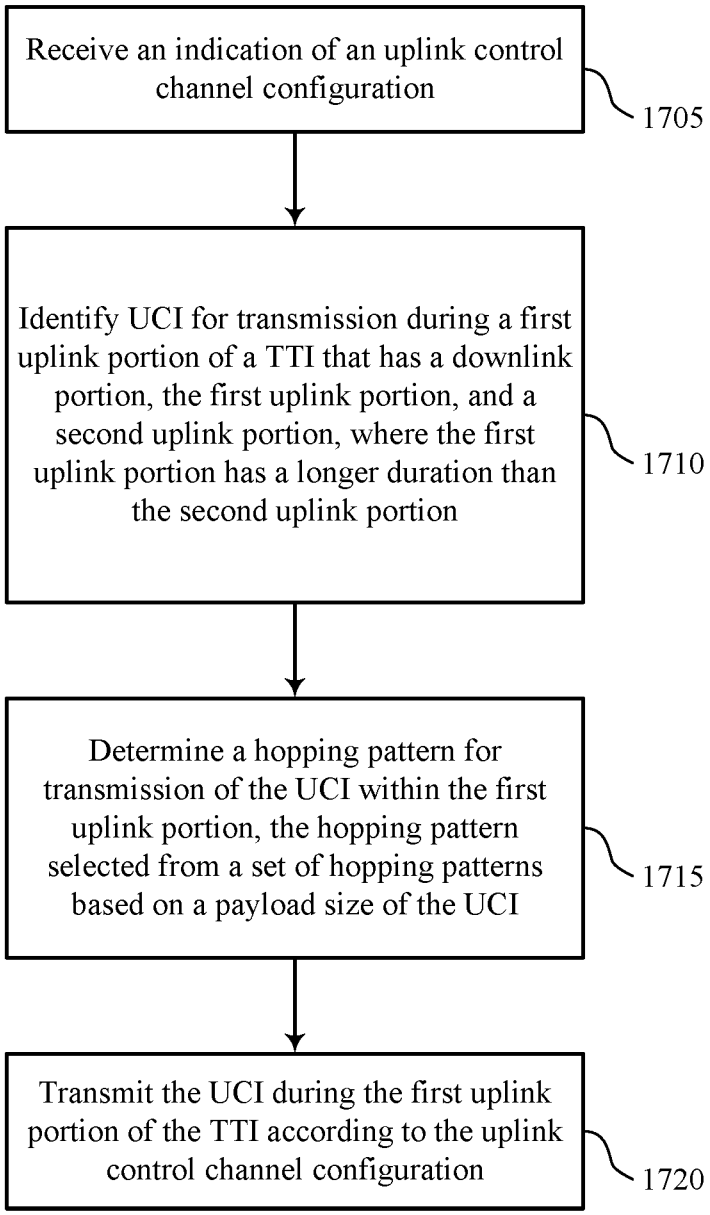
Receive an indication of an uplink control channel configuration
1705
Identify UCI for transmission during a first uplink portion of a TTI that has a downlink portion, the first uplink portion, and a second uplink portion, where the first uplink portion has a longer duration than the second uplink portion
1710
Determine a hopping pattern for transmission of the UCI within the first uplink portion, the hopping pattern selected from a set of hopping patterns based on a payload size of the UCI
1715
Transmit the UCI during the first uplink portion of the TTI according to the uplink control channel configuration
1720
1700

FIG. 17

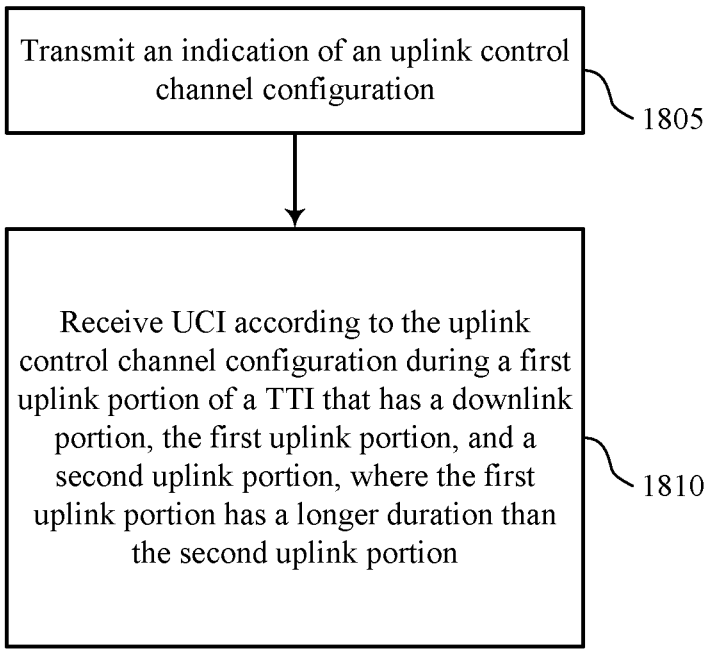
Transmit an indication of an uplink control channel configuration
1805
Receive UCI according to the uplink control channel configuration during a first uplink portion of a TTI that has a downlink portion, the first uplink portion, and a second uplink portion, where the first uplink portion has a longer duration than the second uplink portion
1810
1800

FIG. 18

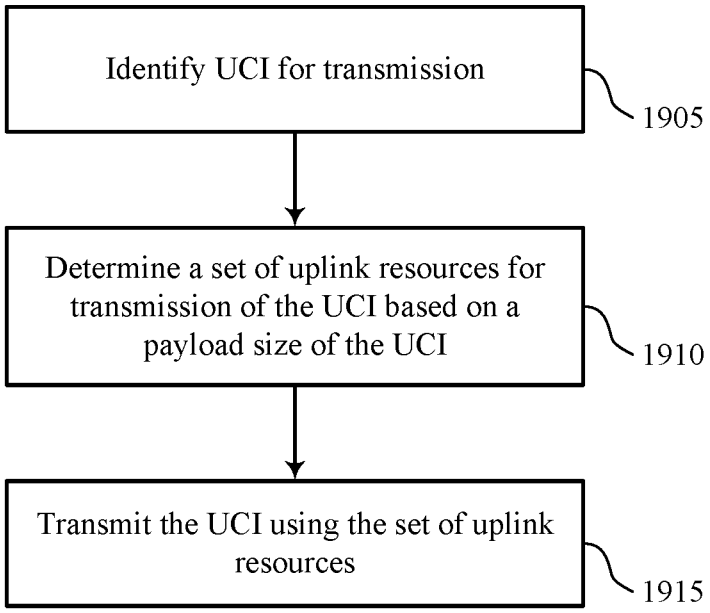
Identify UCI for transmission
1905
Determine a set of uplink resources for transmission of the UCI based on a payload size of the UCI
1910
Transmit the UCI using the set of uplink resources
1915
1900

FIG. 19

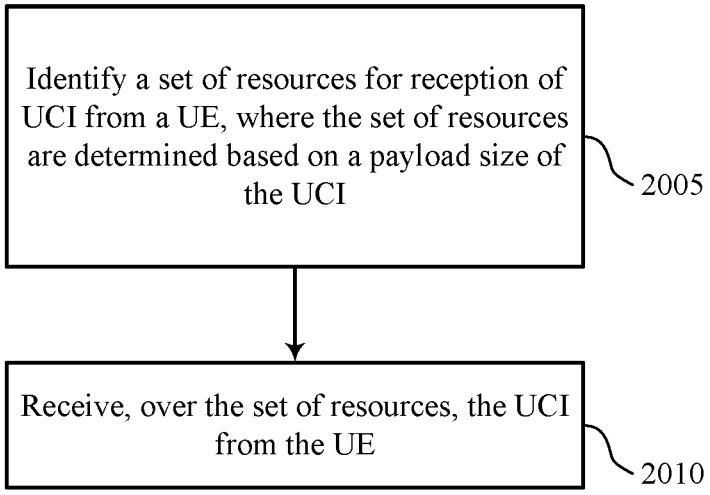
Identify a set of resources for reception of UCI from a UE, where the set of resources are determined based on a payload size of the UCI
2005
Receive, over the set of resources, the UCI from the UE
2010
2000

FIG. 20