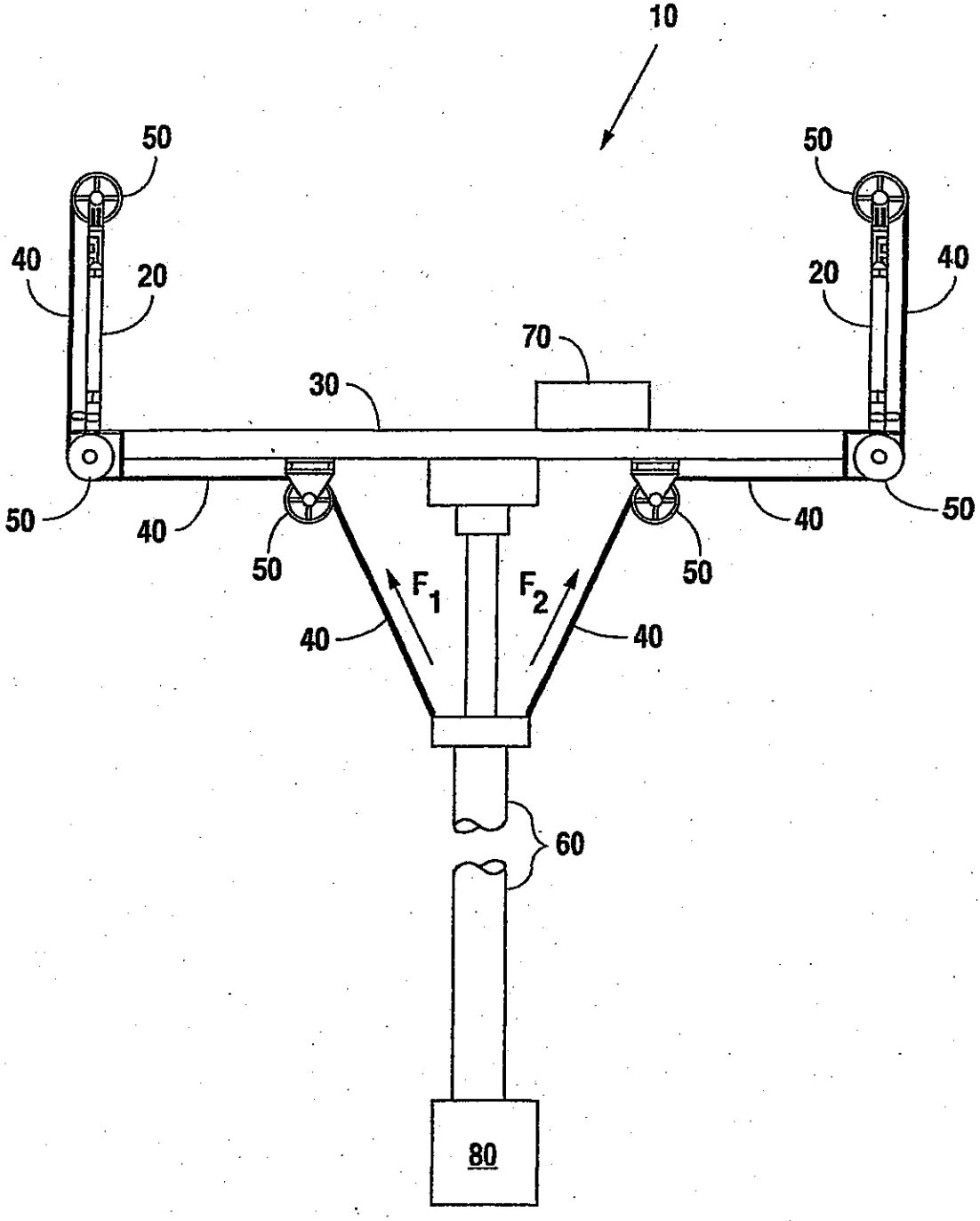


Fig. 1

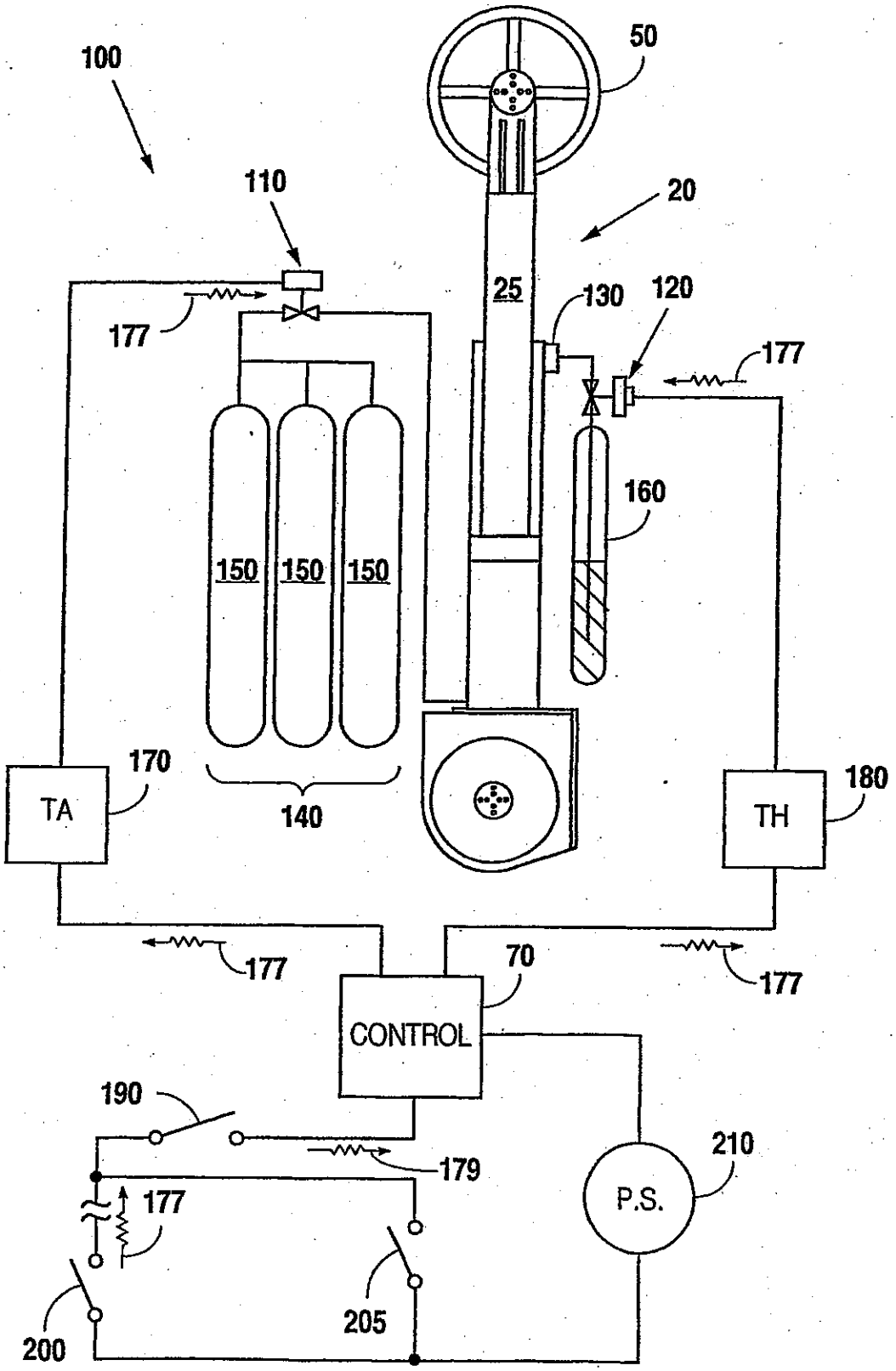
100
50
110
20
25
130
120
177
177
160
150
150
150
170
TA
140
180
TH
177
177
70
CONTROL
190
179
210
P.S.
177
205
200

Fig. 2

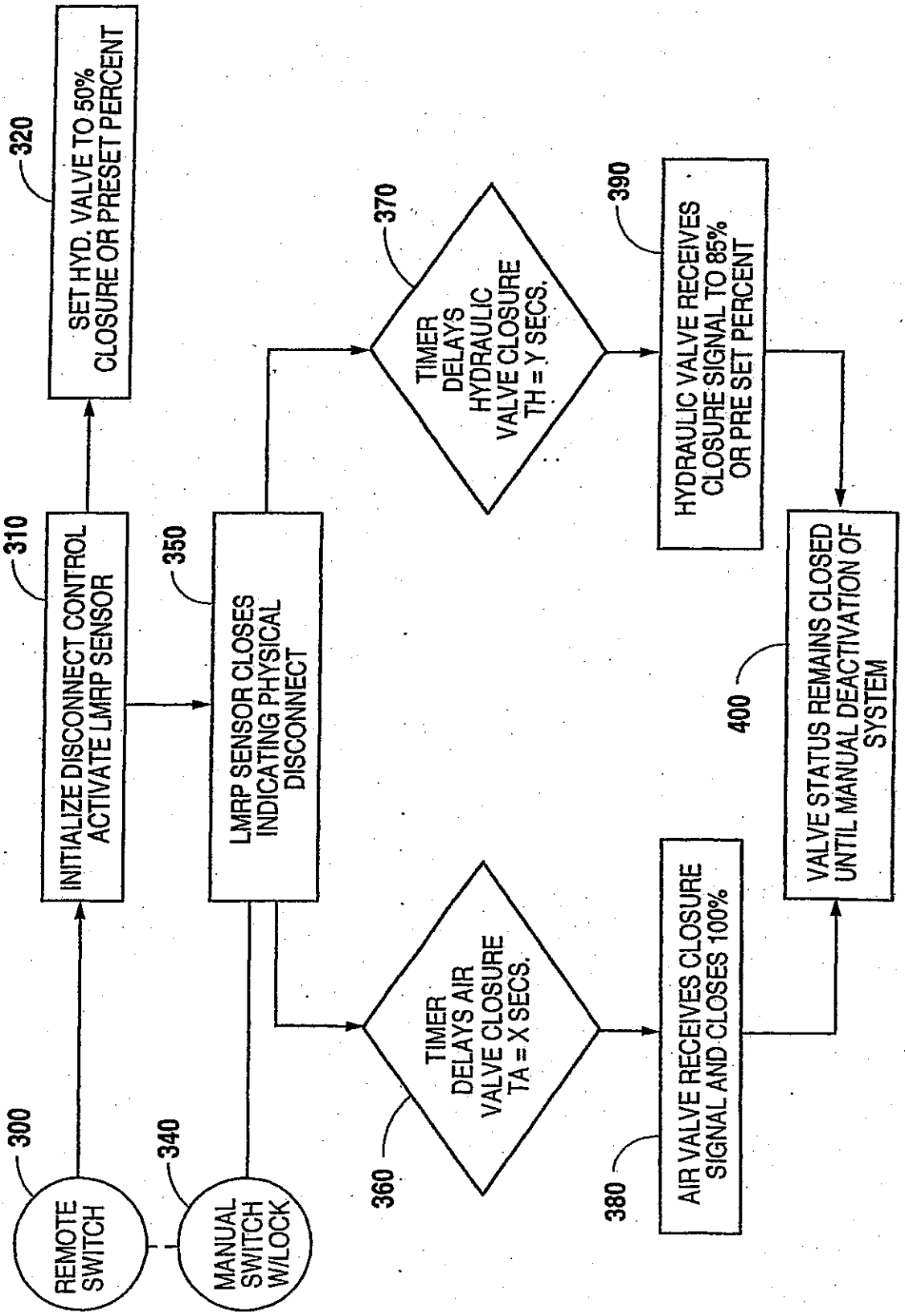
300
REMOTE SWITCH
340
MANUAL SWITCH W/LOCK
310
INITIALIZE DISCONNECT CONTROL ACTIVATE LMRP SENSOR
320
SET HYD. VALVE TO 50% CLOSURE OR PRESET PERCENT
350
LMRP SENSOR CLOSES INDICATING PHYSICAL DISCONNECT
360
TIMER DELAYS AIR VALVE CLOSURE TA = X SECS.
370
TIMER DELAYS HYDRAULIC VALVE CLOSURE TH = Y SECS.
380
AIR VALVE RECEIVES CLOSURE SIGNAL AND CLOSES 100%
390
HYDRAULIC VALVE RECEIVES CLOSURE SIGNAL TO 85% OR PRE SET PERCENT
400
VALVE STATUS REMAINS CLOSED UNTIL MANUAL DEACTIVATION OF SYSTEM

Fig. 3