(12) INTERNATIONAL APPLICATION PUBLISHED UNDER THE PATENT COOPERATION TREATY (PCT)

(19) World Intellectual Property Organization
International Bureau

(43) International Publication Date
18 October 2001 (18.10.2001)

PCT

(10) International Publication Number
WO 01/76346 A2

(51) International Patent Classification: Not classified

(21) International Application Number: PCT/US01/10381

(22) International Filing Date: 29 March 2001 (29.03.2001)

(25) Filing Language: English

(26) Publication Language: English

(30) Priority Data:
09/547,748 12 April 2000 (12.04.2000) US

(71) Applicant *(for all designated States except US)*: **INTEL CORPORATION** [US/US]; 2200 Mission College Boulevard, Santa Clara, CA 95052 (US).

(72) Inventor; and

(75) Inventor/Applicant *(for US only)*: **BAZES, Melvin** [IL/IL]; P.O. Box 6943, 31060 Haifa (IL).

(74) Agents: **KALSON, Seth, Z.** et al.; Intel Corporation, 2200 Mission College Boulevard, SC4-202A, Santa Clara, CA 95052 (US).

(81) Designated States *(national)*: AE, AG, AL, AM, AT, AU, AZ, BA, BB, BG, BR, BY, BZ, CA, CH, CN, CO, CR, CU, CZ, DE, DK, DM, DZ, EE, ES, FI, GB, GD, GE, GH, GM, HR, HU, ID, IL, IN, IS, JP, KE, KG, KP, KR, KZ, LC, LK, LR, LS, LT, LU, LV, MA, MD, MG, MK, MN, MW, MX, MZ, NO, NZ, PL, PT, RO, RU, SD, SE, SG, SI, SK, SL, TJ, TM, TR, TT, TZ, UA, UG, US, UZ, VN, YU, ZA, ZW.

(84) Designated States *(regional)*: ARIPO patent (GH, GM, KE, LS, MW, MZ, SD, SL, SZ, TZ, UG, ZW), Eurasian patent (AM, AZ, BY, KG, KZ, MD, RU, TJ, TM), European patent (AT, BE, CH, CY, DE, DK, ES, FI, FR, GB, GR, IE, IT, LU, MC, NL, PT, SE, TR), OAPI patent (BF, BJ, CF, CG, CI, CM, GA, GN, GW, ML, MR, NE, SN, TD, TG).

**Published:**
— *without international search report and to be republished upon receipt of that report*

*[Continued on next page]*

(54) Title: HIGH-GAIN, VERY WIDE COMMON MODE RANGE, SELF BIASED OPERATIONAL AMPLIFIER

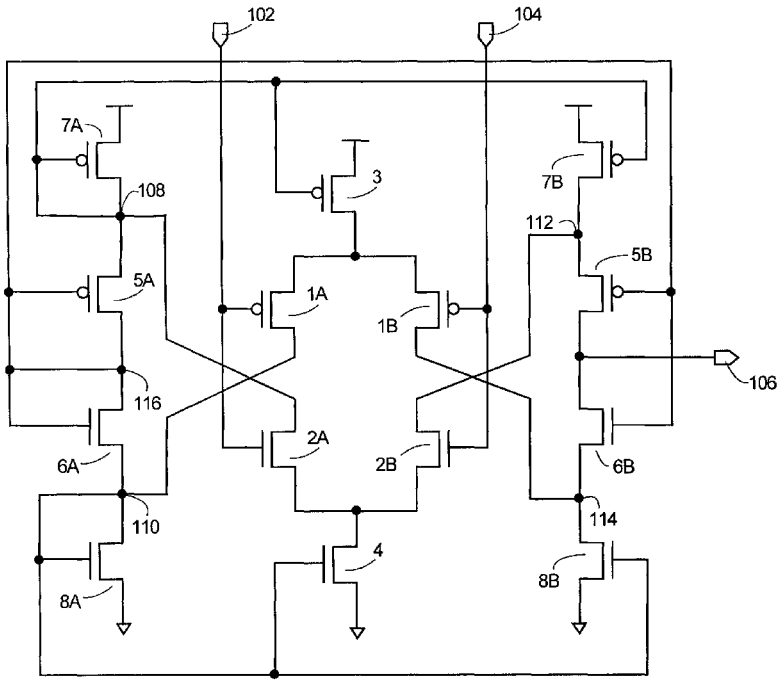


(57) Abstract: A high gain, very wide common mode range, self-biased operational amplifier comprising complementary differential transistor pairs biased by biasing transistors and current mirrors, and further comprising cascode transistors to provide a high amplifier output impedance, wherein the biasing transistors, current mirrors, and cascode transistors are all self-biased via negative feedback.

WO 01/76346 A2

*For two-letter codes and other abbreviations, refer to the "Guidance Notes on Codes and Abbreviations" appearing at the beginning of each regular issue of the PCT Gazette.*