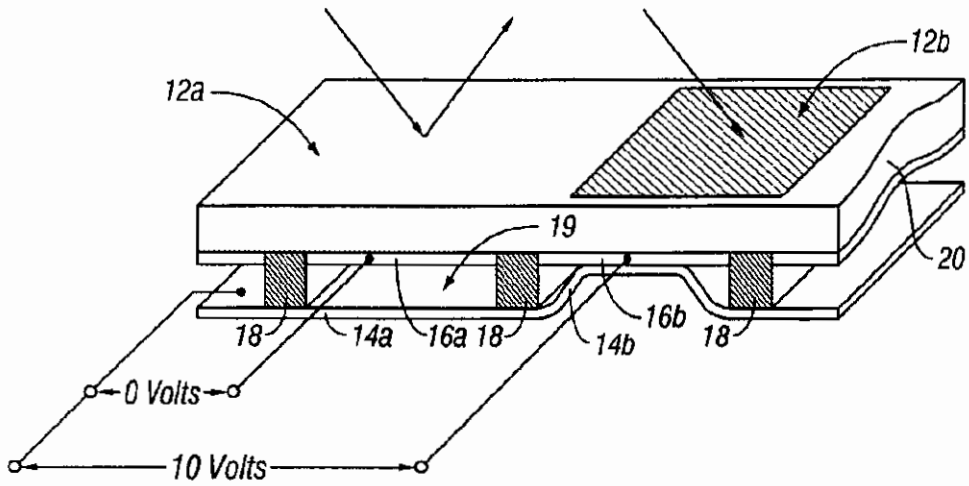

FIG. 1

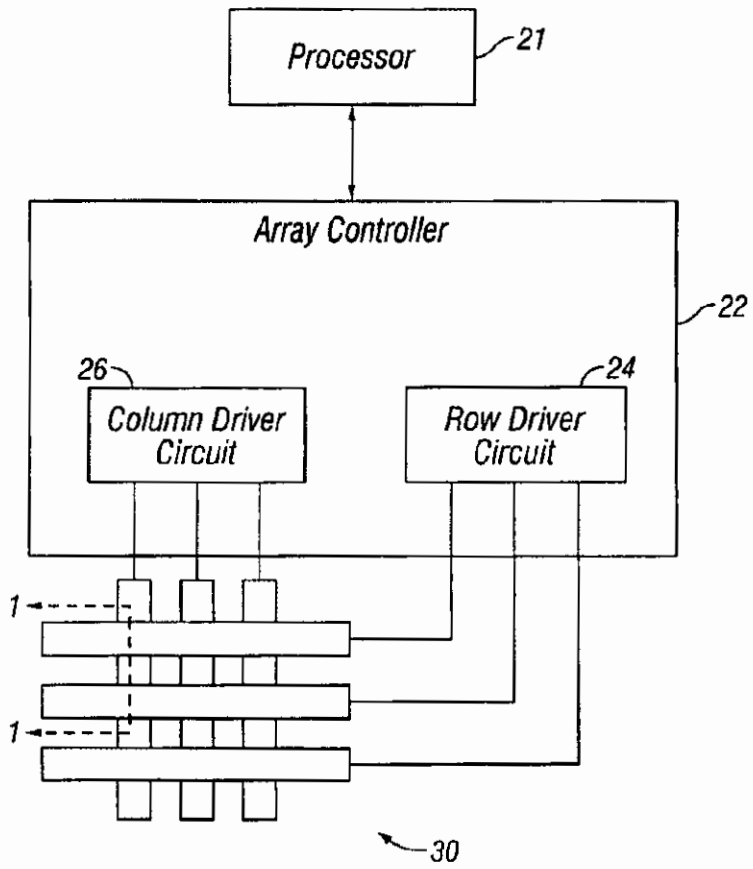
Processor
21
Array Controller
22
26
Column Driver Circuit
24
Row Driver Circuit
1
1
30

FIG. 2

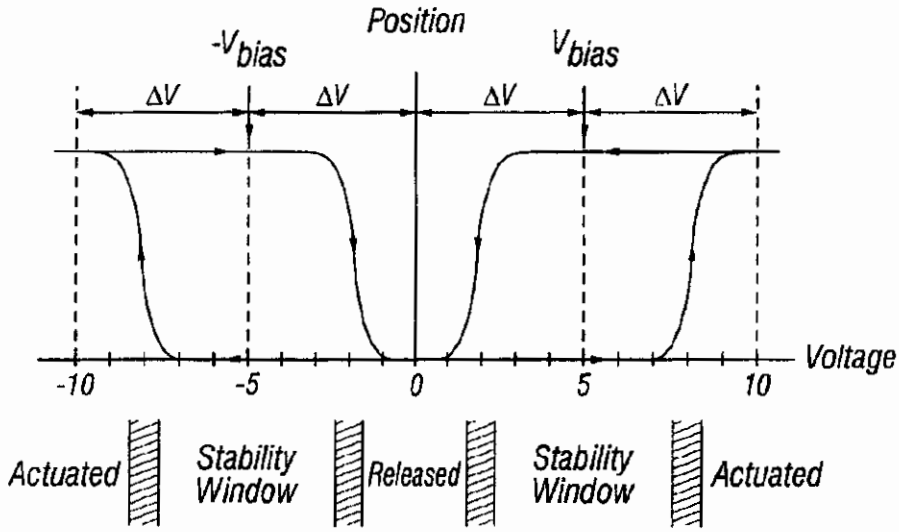

FIG. 3

Row Output Signals	Column Output Signals: $+V_{bias}$	Column Output Signals: $-V_{bias}$
0	Stable	Stable
$+\Delta V$	Release	Actuate
$-\Delta V$	Actuate	Release

FIG. 4

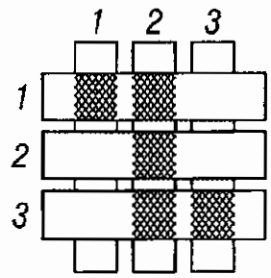
1
2
3
1
2
3

FIG. 5A

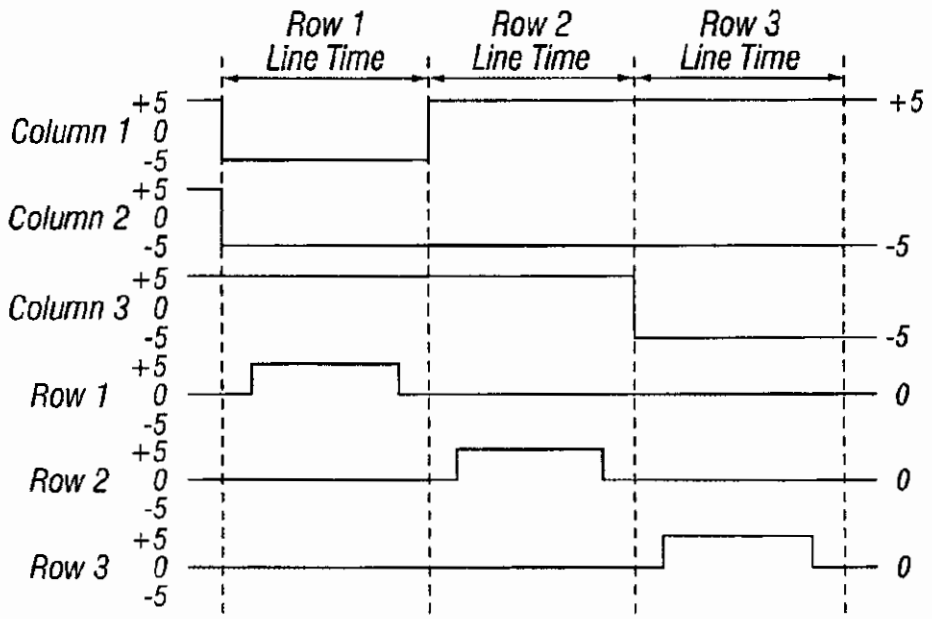
Row 1
Line Time
Row 2
Line Time
Row 3
Line Time
Column 1
Column 2
Column 3
Row 1
Row 2
Row 3
+5
0
-5
+5
-5
-5
0
0
0

FIG. 5B

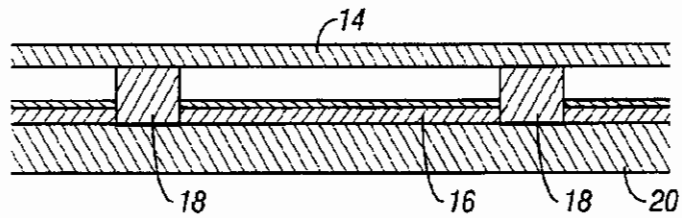

FIG. 6A

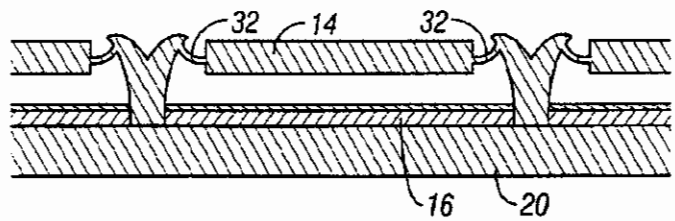

FIG. 6B

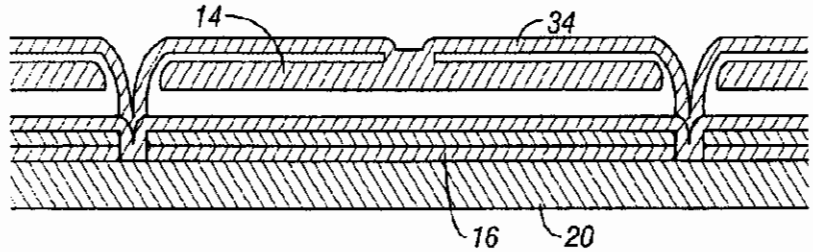

FIG. 6C

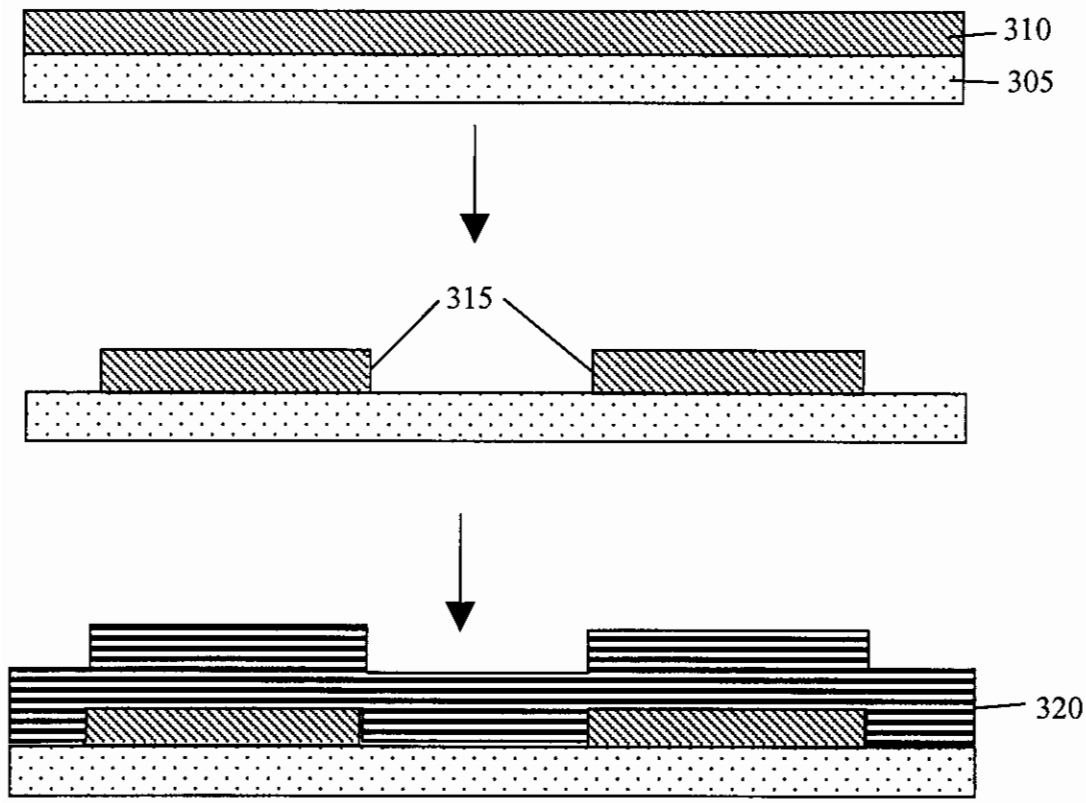

FIG. 7

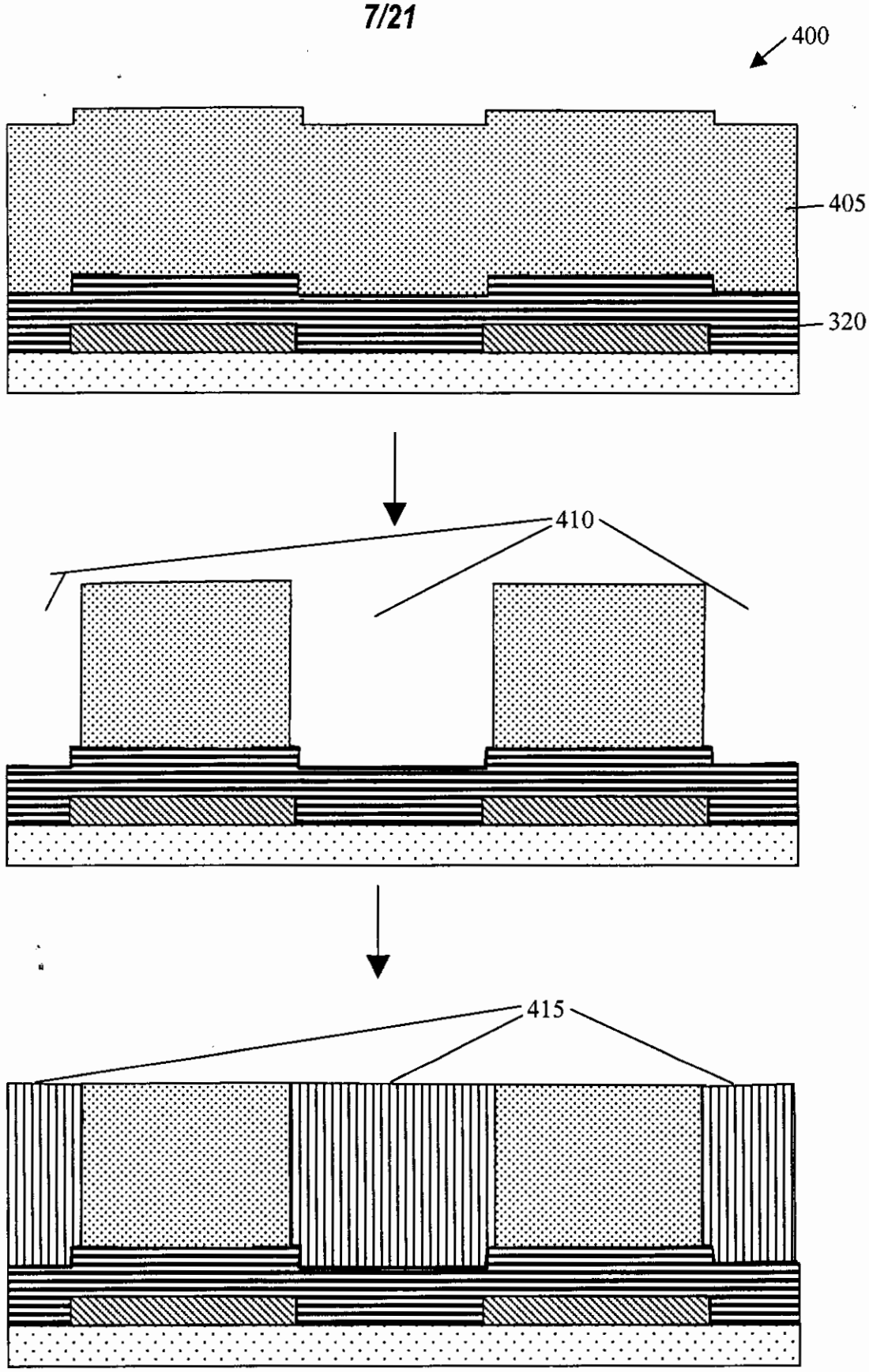

FIG. 8

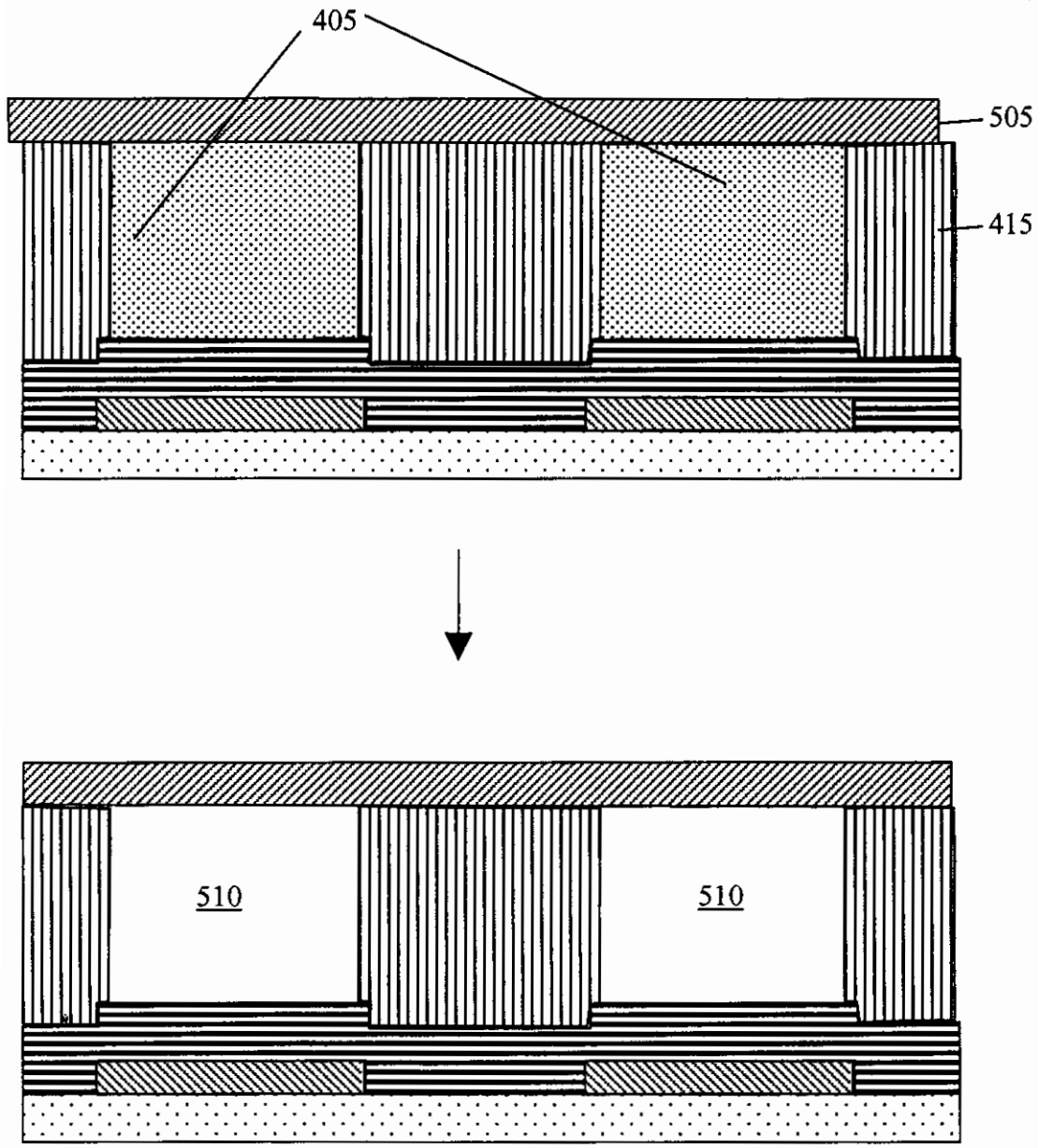

FIG. 9

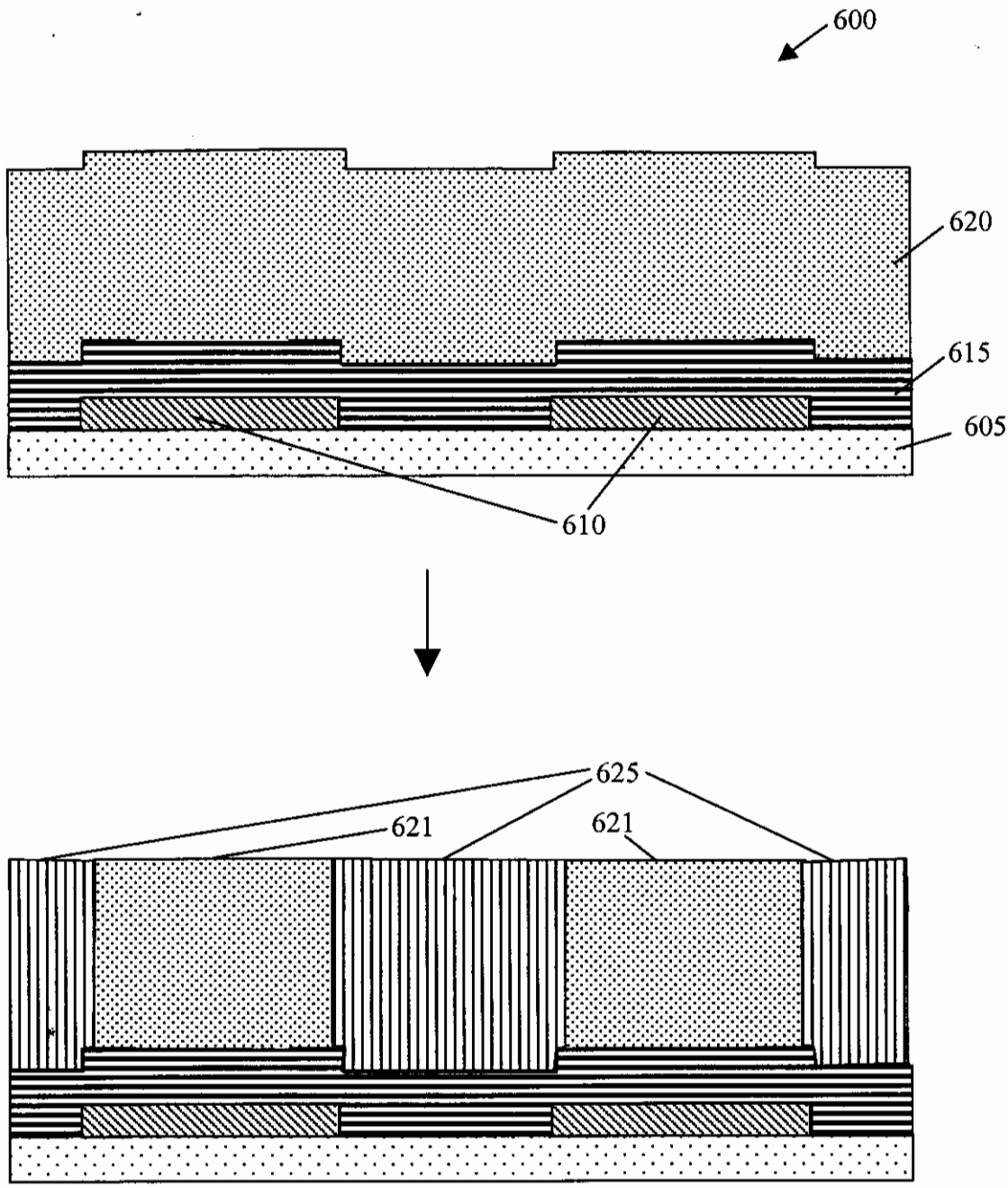

FIG. 10

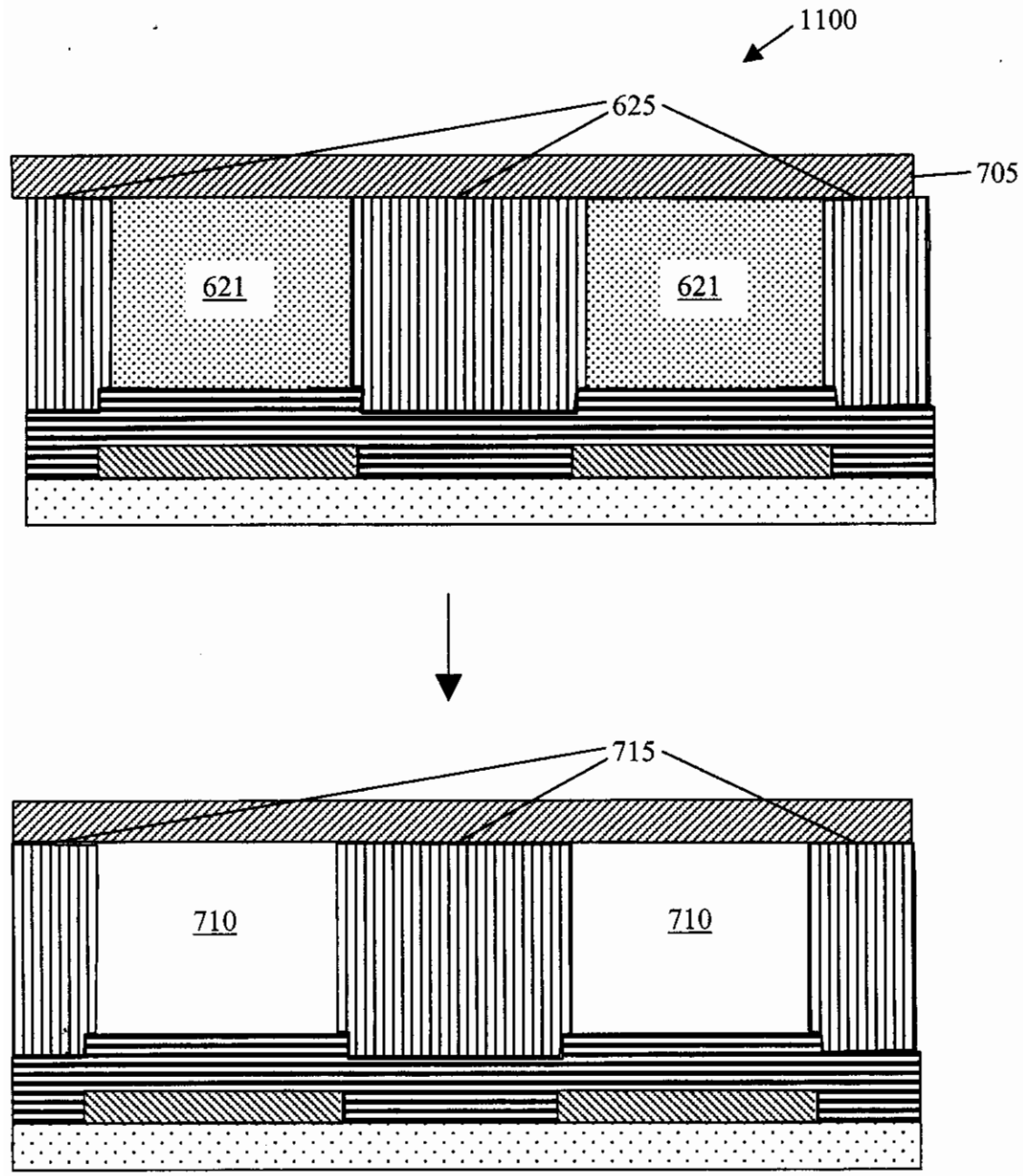

FIG. 11

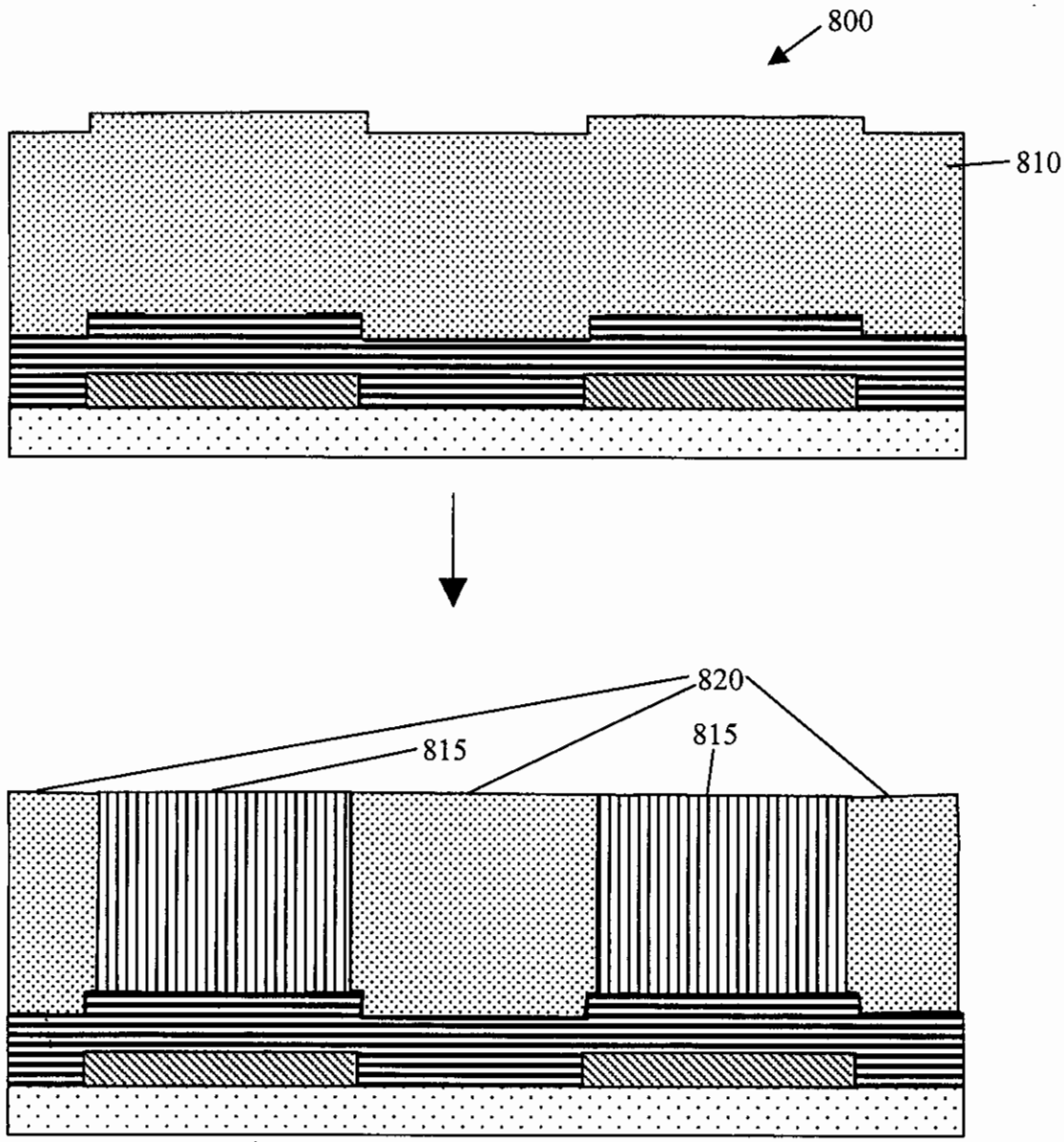

FIG. 12

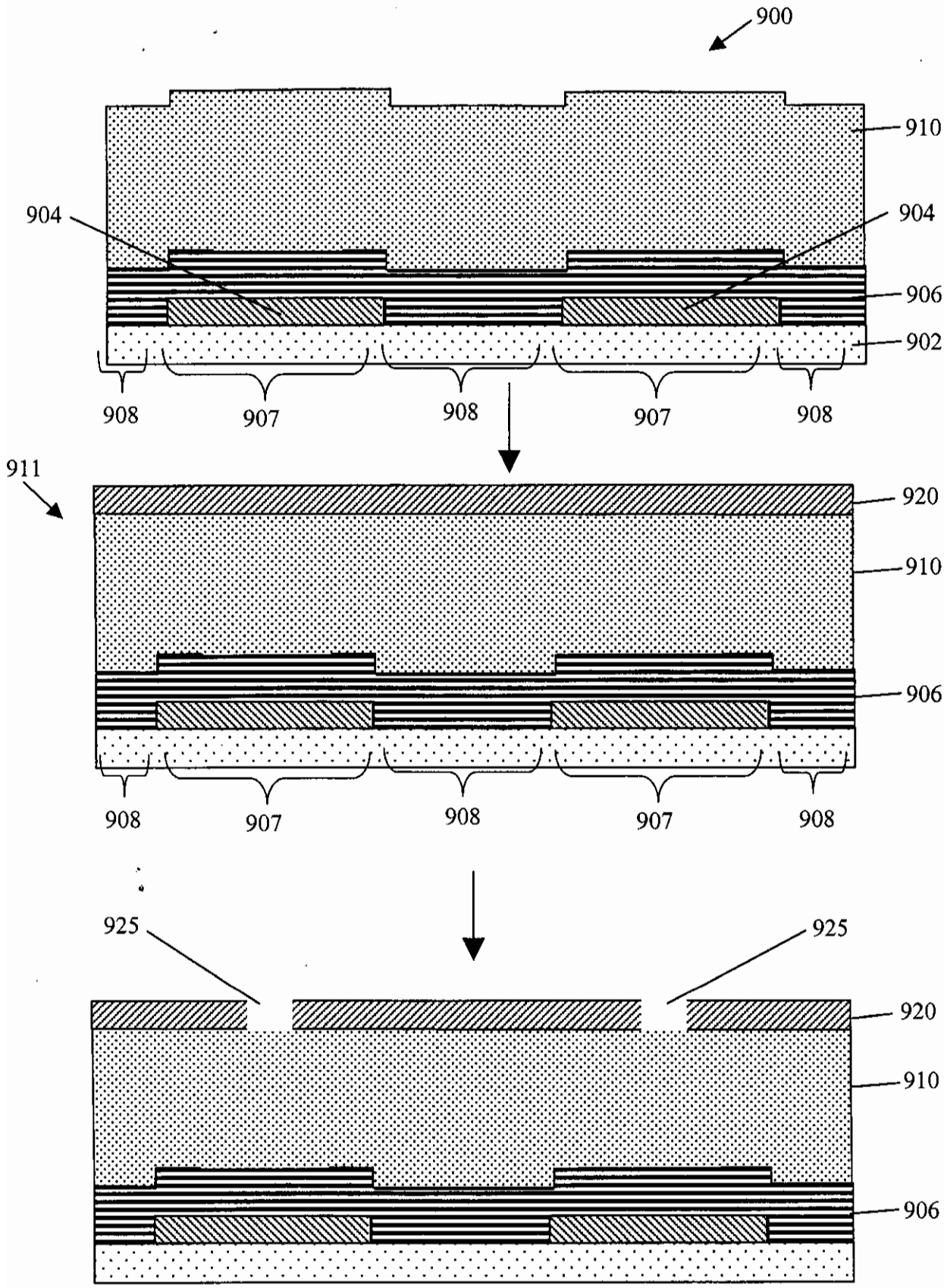
900
910
904
904
906
902
908
907
908
907
908
911
920
910
906
908
907
908
907
908
925
925
920
910
906

FIG. 13

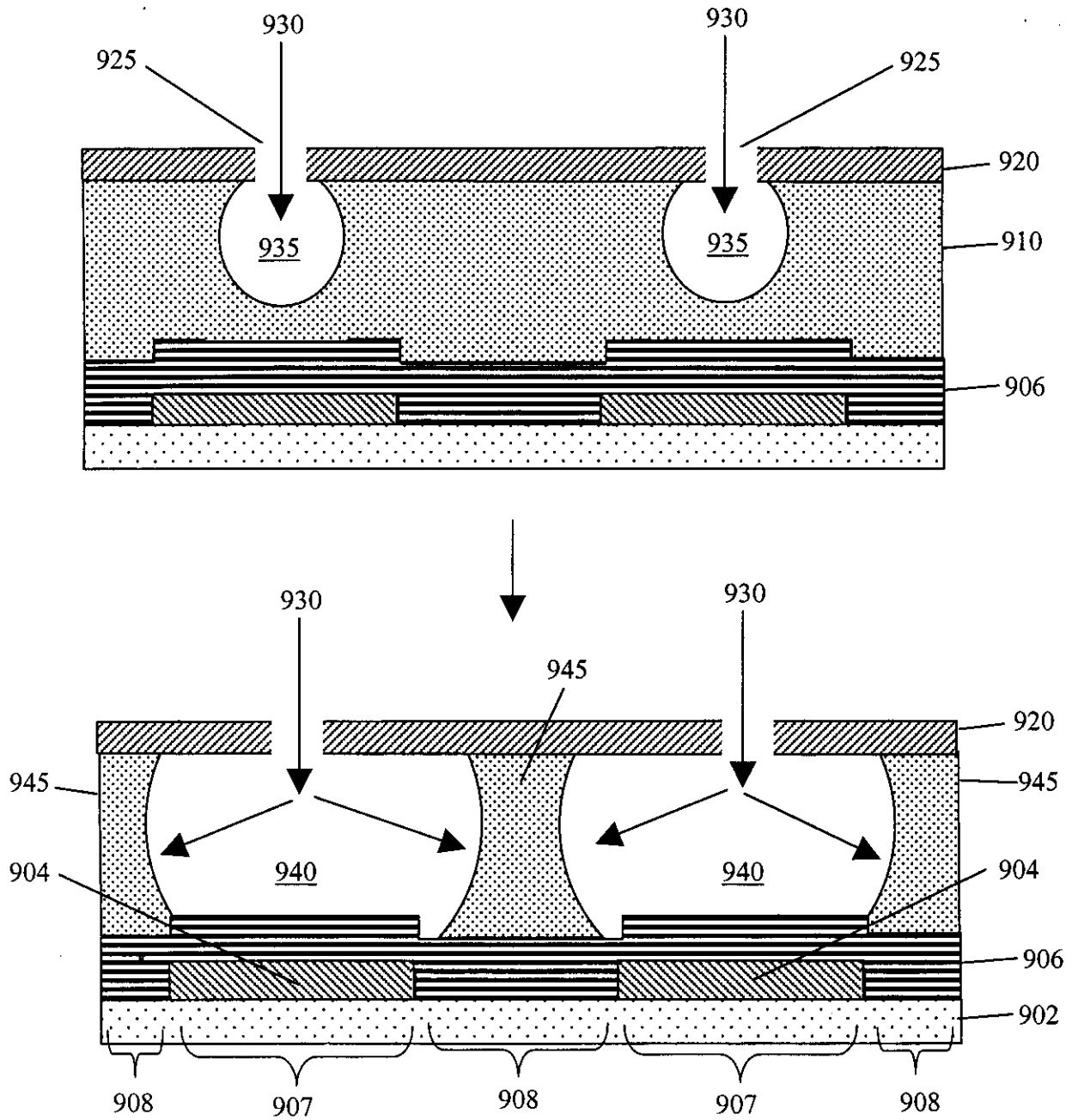
930
930
925
925
920
935
935
910
906
930
930
945
920
945
945
940
940
904
904
906
902
908
907
908
907
908

FIG. 14

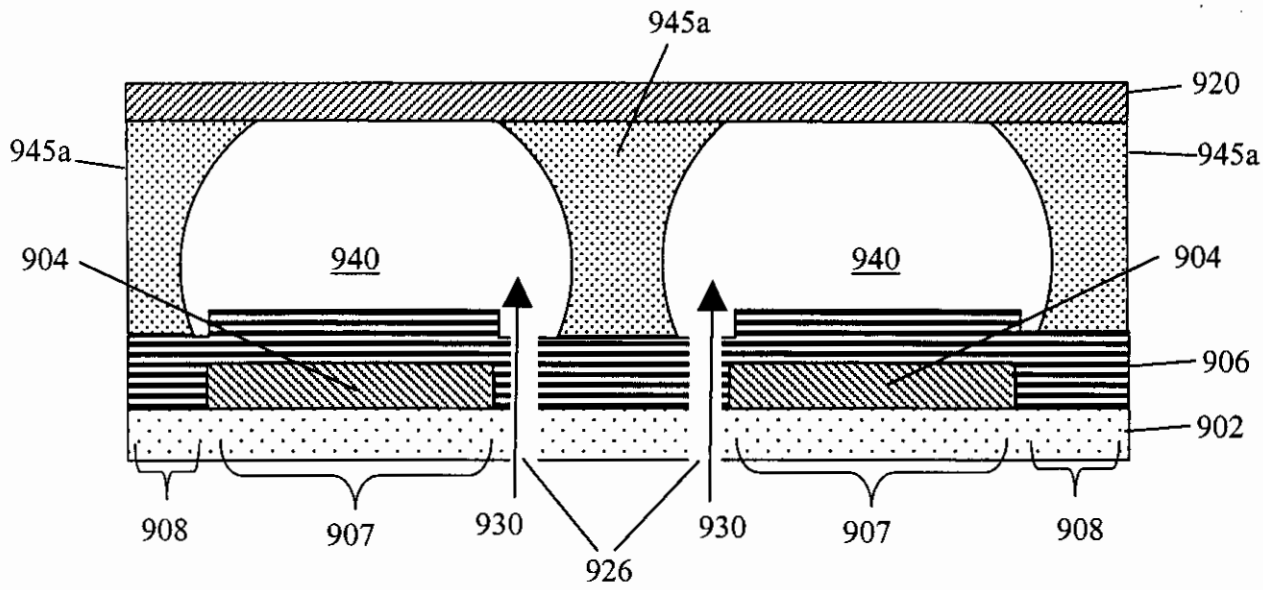

FIG. 15A

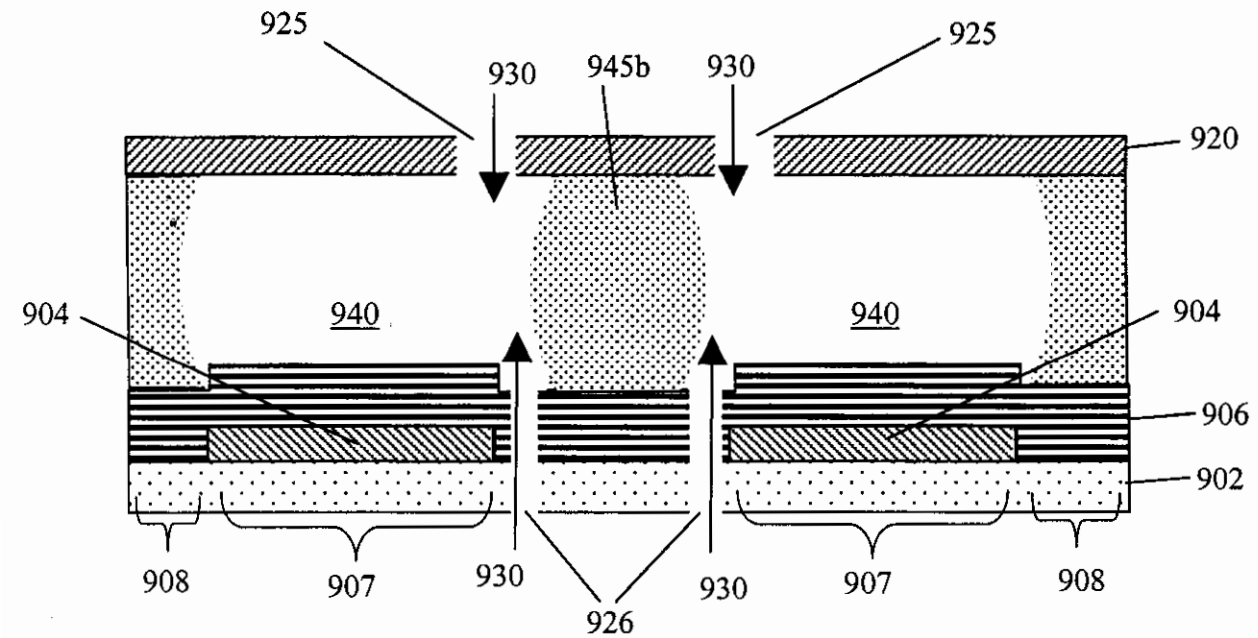

FIG. 15B

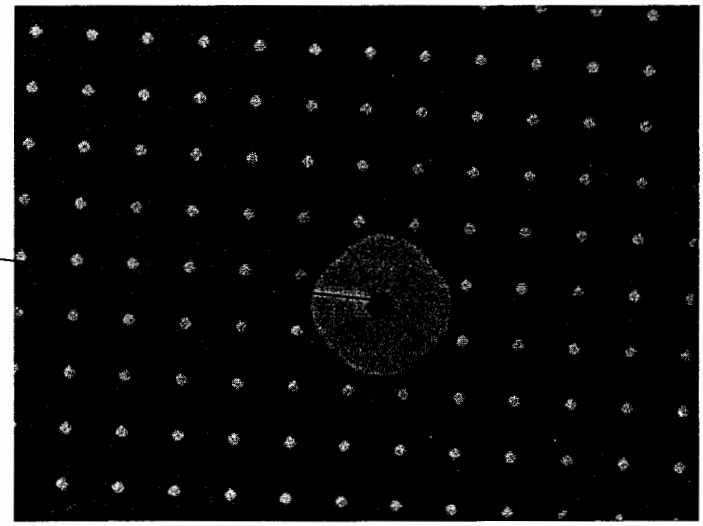

FIG. 16

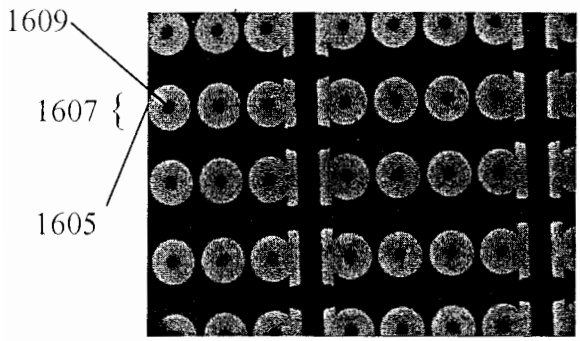

FIG. 17A

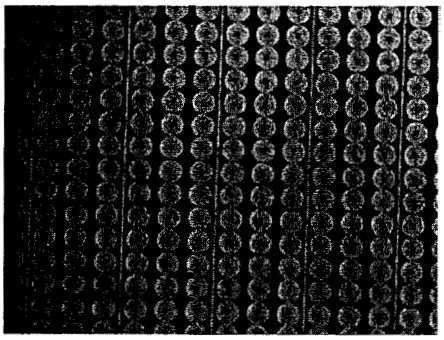

FIG. 17B

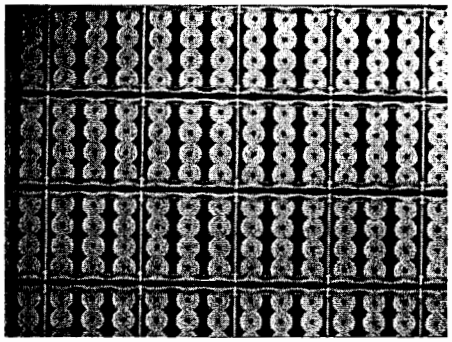

FIG. 17C

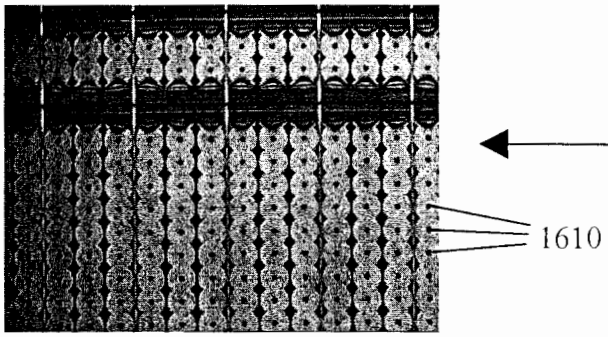

FIG. 17D

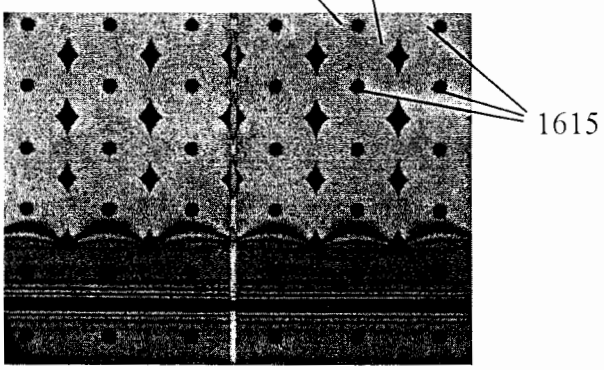

FIG. 17E

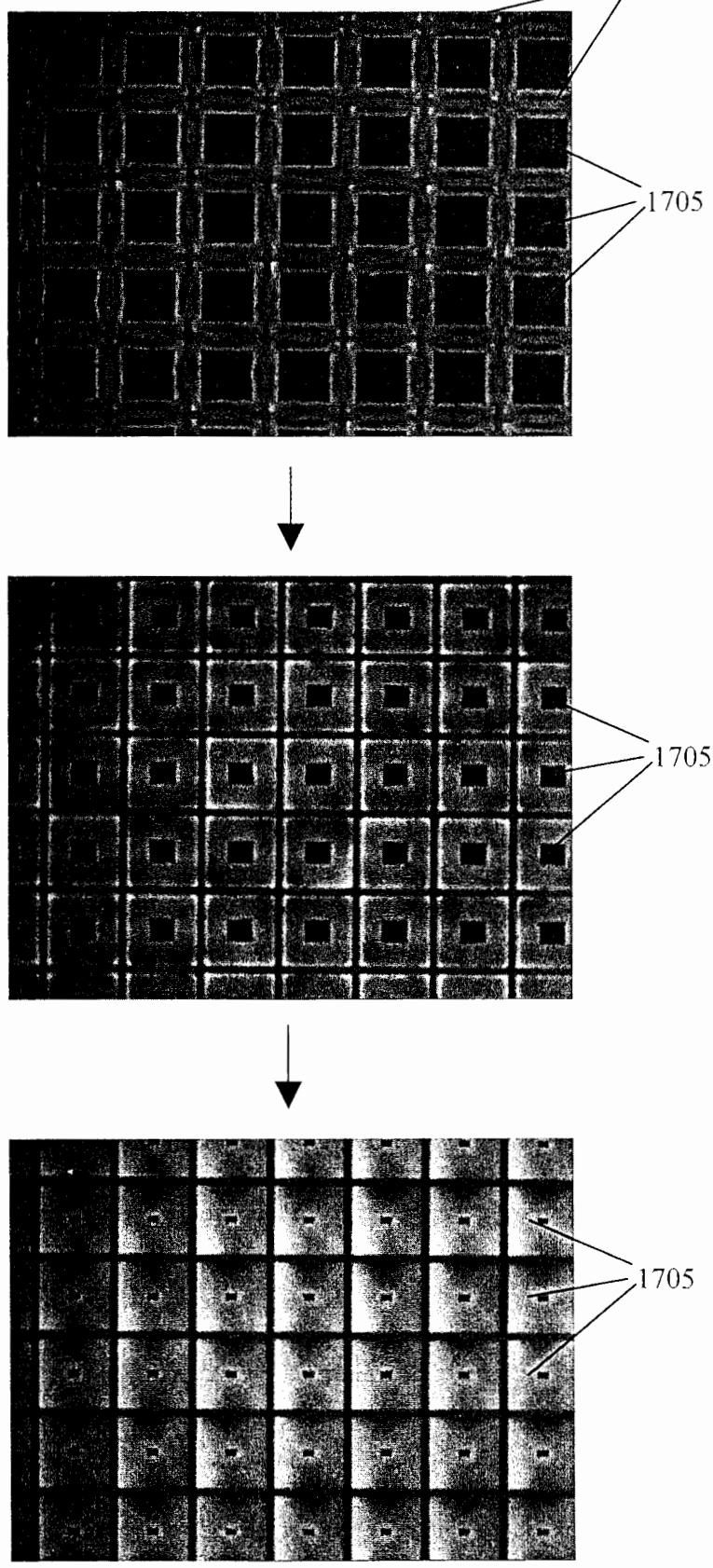

FIG. 18

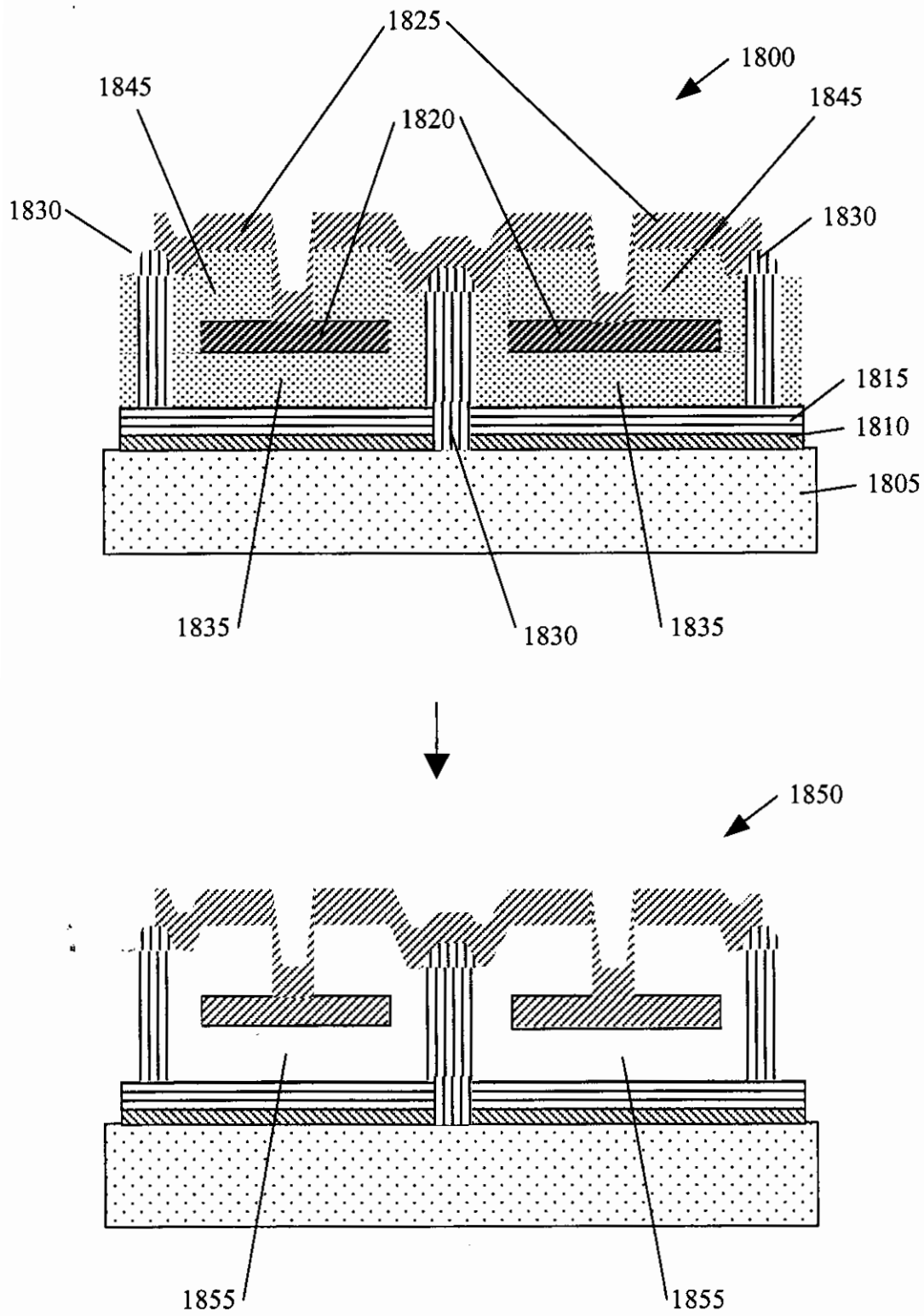
1825
1800
1845
1845
1820
1830
1830
1815
1810
1805
1835
1830
1835
1850
1855
1855

FIG. 19

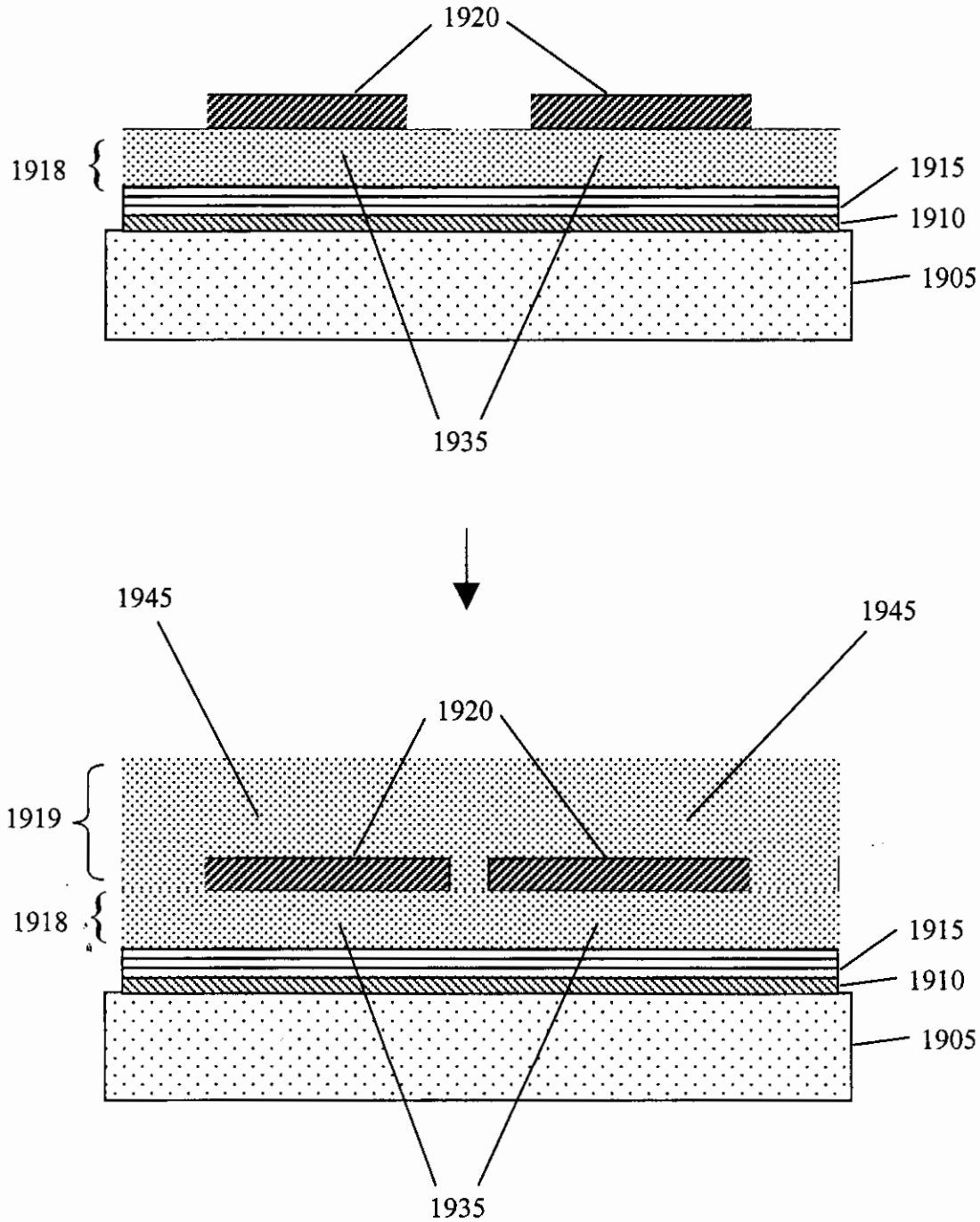
1920
1918
1915
1910
1905
1935
1945
1945
1920
1919
1918
1915
1910
1905
1935

FIG. 20A

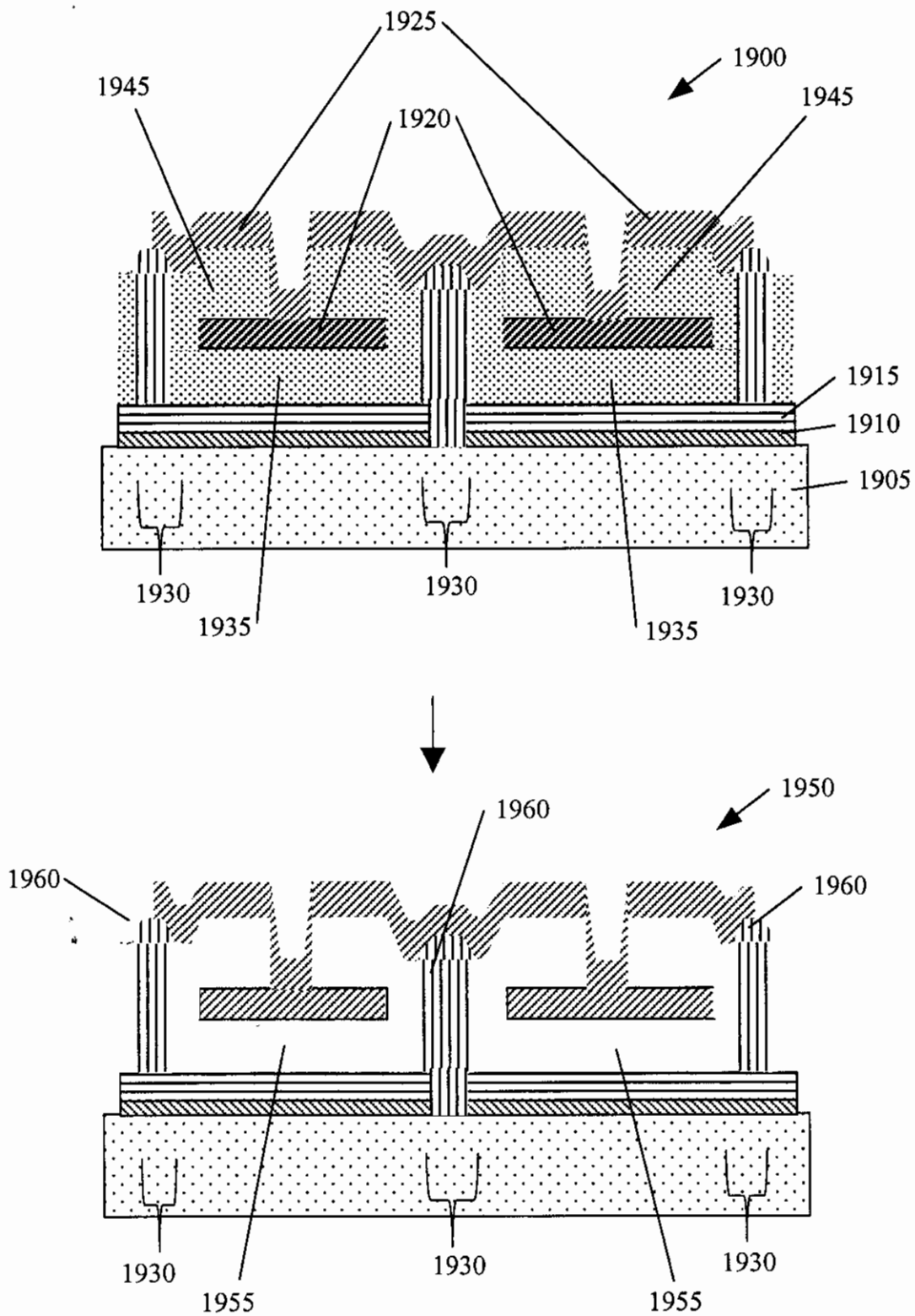
1925
1900
1945
1945
1920
1915
1910
1905
1930
1930
1930
1935
1935
1950
1960
1960
1960
1930
1930
1930
1955
1955

FIG. 20B

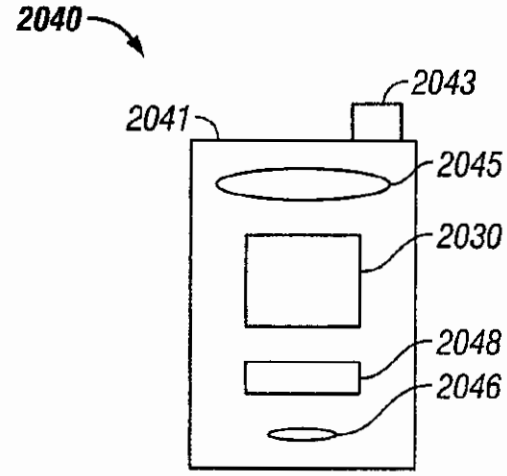

FIG. 21A

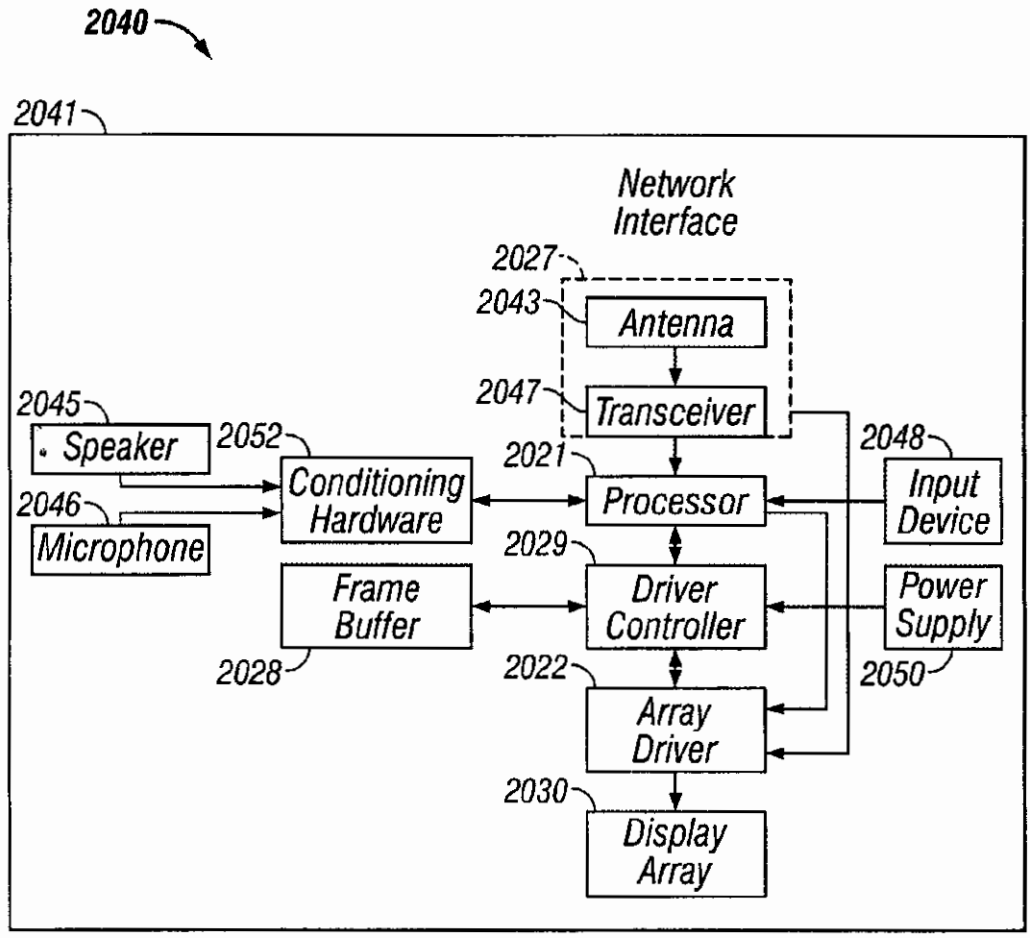

FIG. 21B