Fig.1

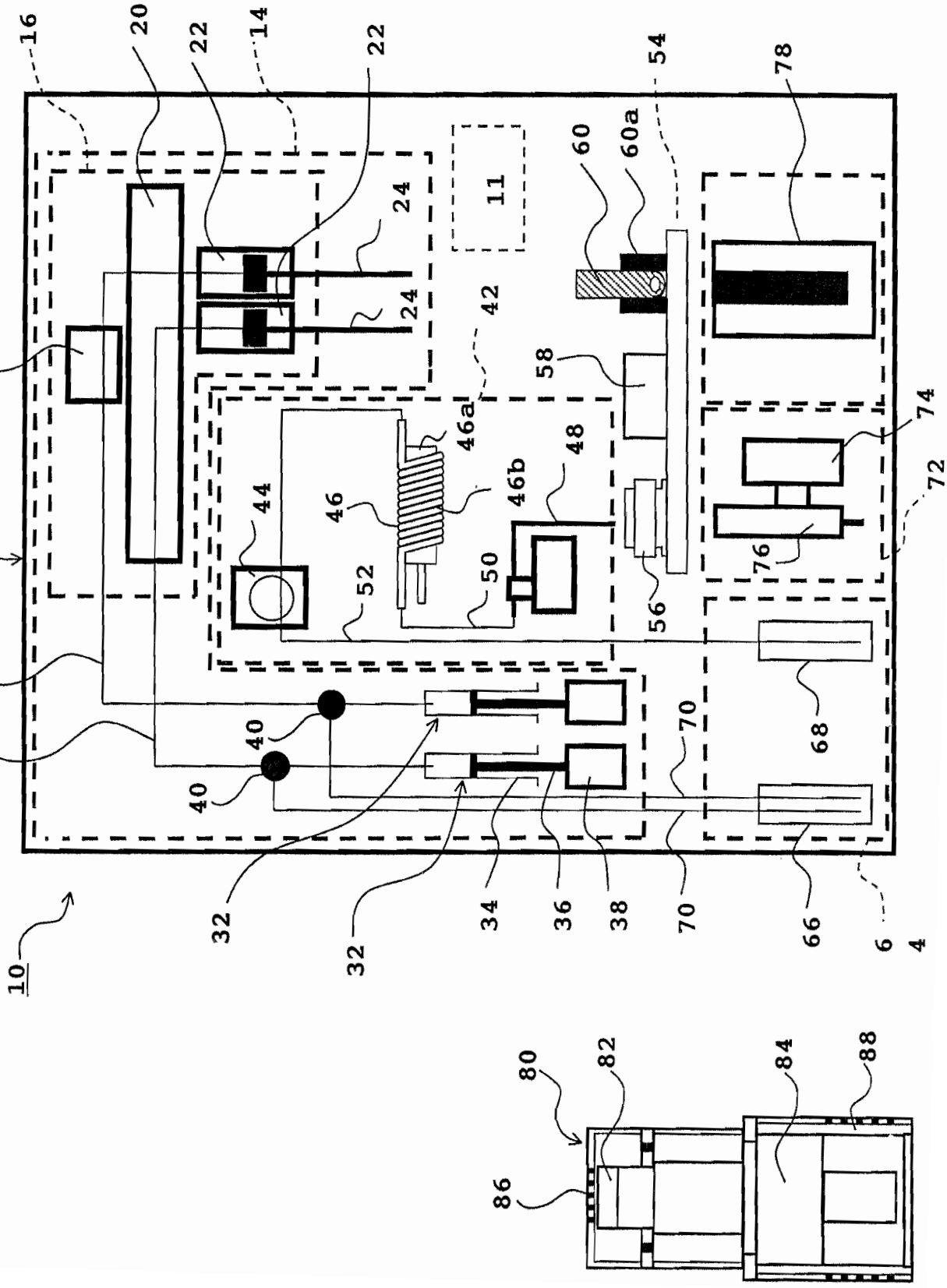
10
12
14
16
18
20
22
24
30
32
34
36
38
40
42
44
46
46a
46b
48
50
52
54
56
58
60
60a
66
68
70
72
74
76
78
80
82
84
86
88

Fig.2

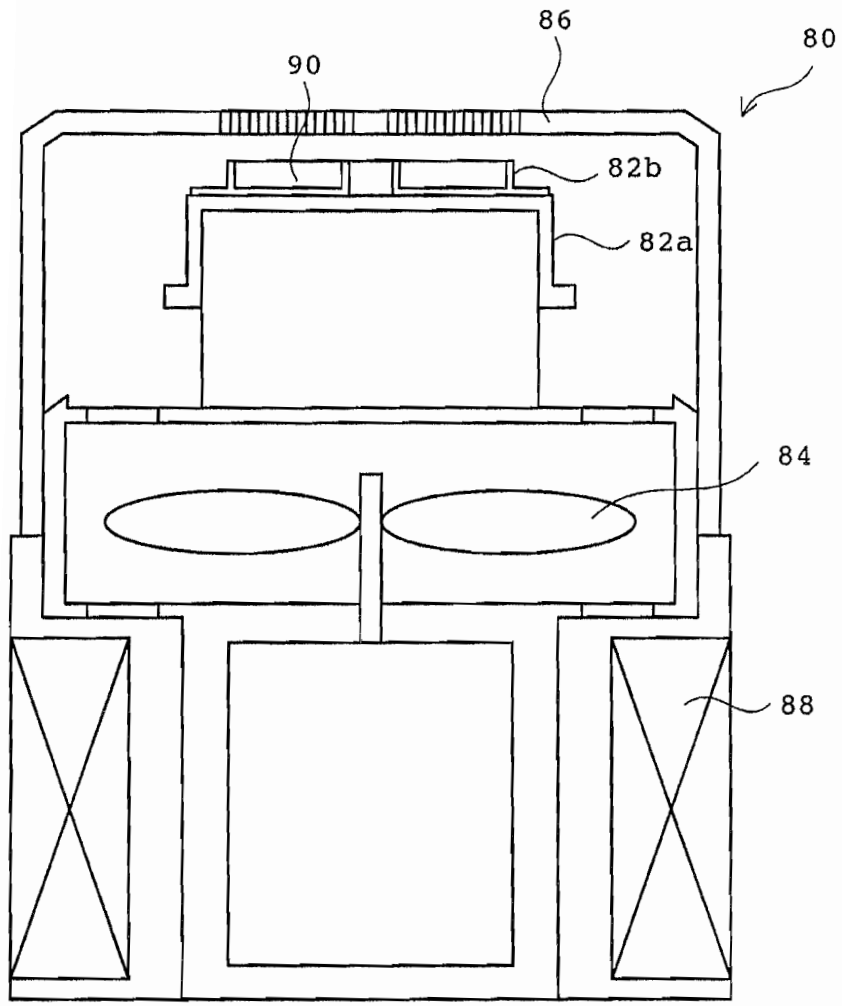

Fig.3

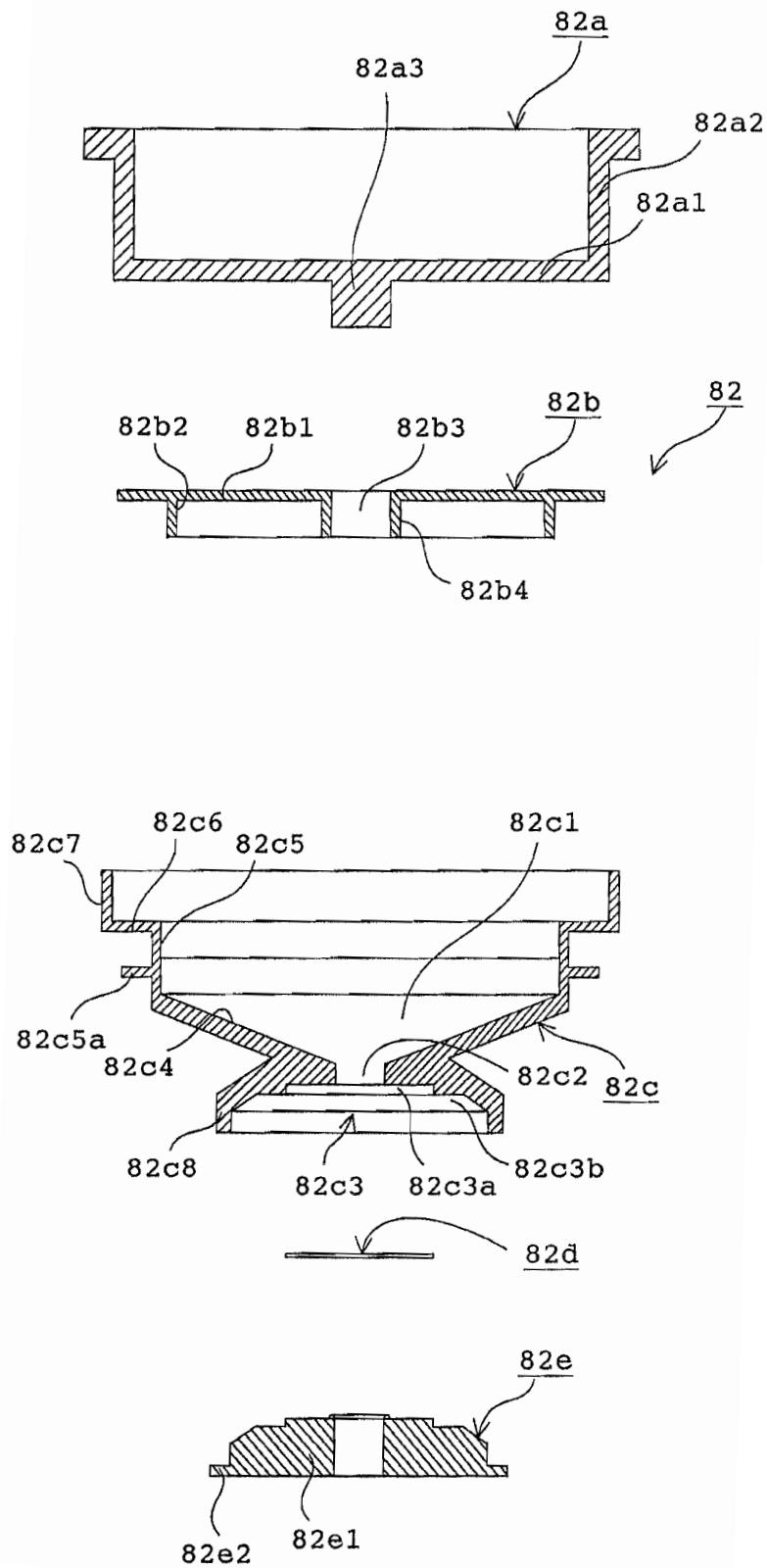
82a
82a3
82a2
82a1
82
82b
82b2
82b1
82b3
82b4
82c6
82c7
82c5
82c1
82c5a
82c4
82c2
82c
82c8
82c3
82c3a
82c3b
82d
82e
82e2
82e1

Fig.4-A

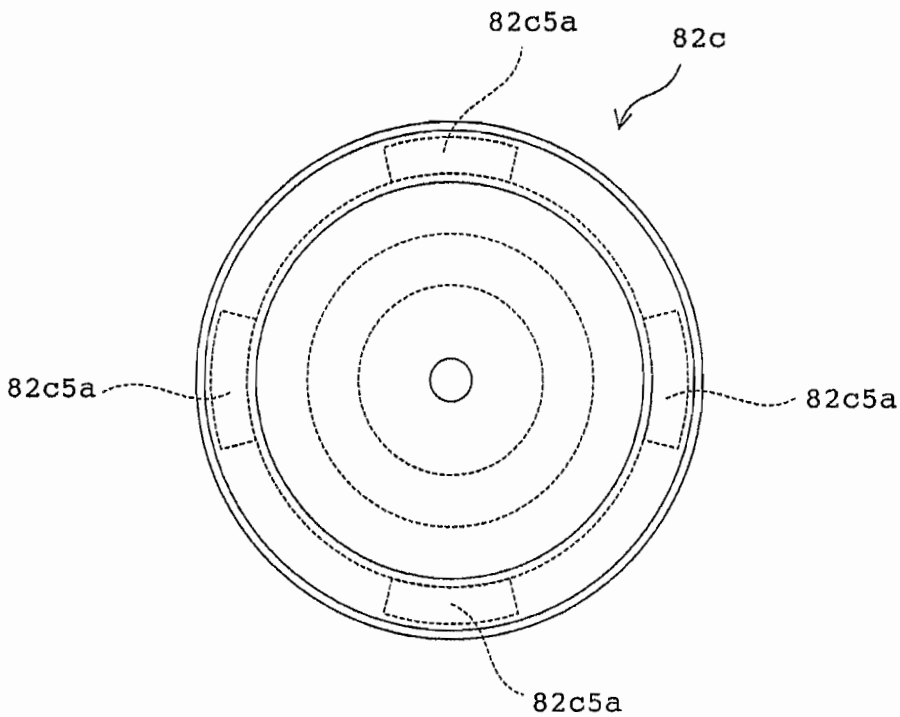
82c5a
82c
82c5a
82c5a
82c5a

Fig.4-B

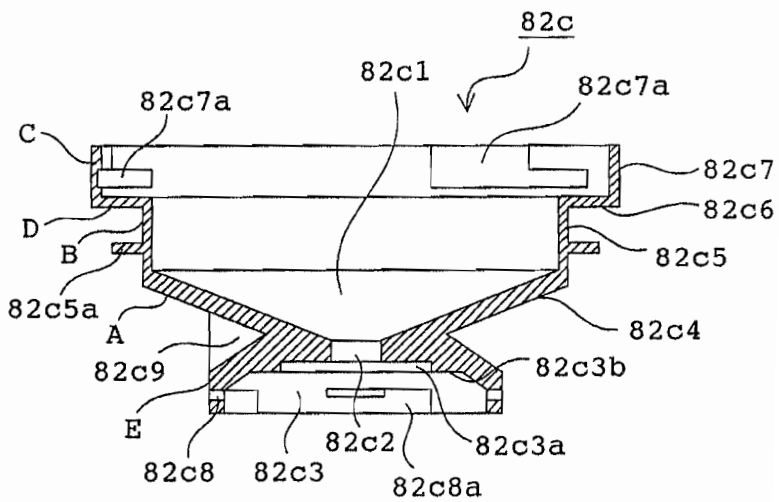
82c
82c1
82c7a
82c7a
C
82c7
82c6
D
B
82c5
82c5a
A
82c4
82c9
82c3b
E
82c2
82c3a
82c8
82c3
82c8a

Fig.5

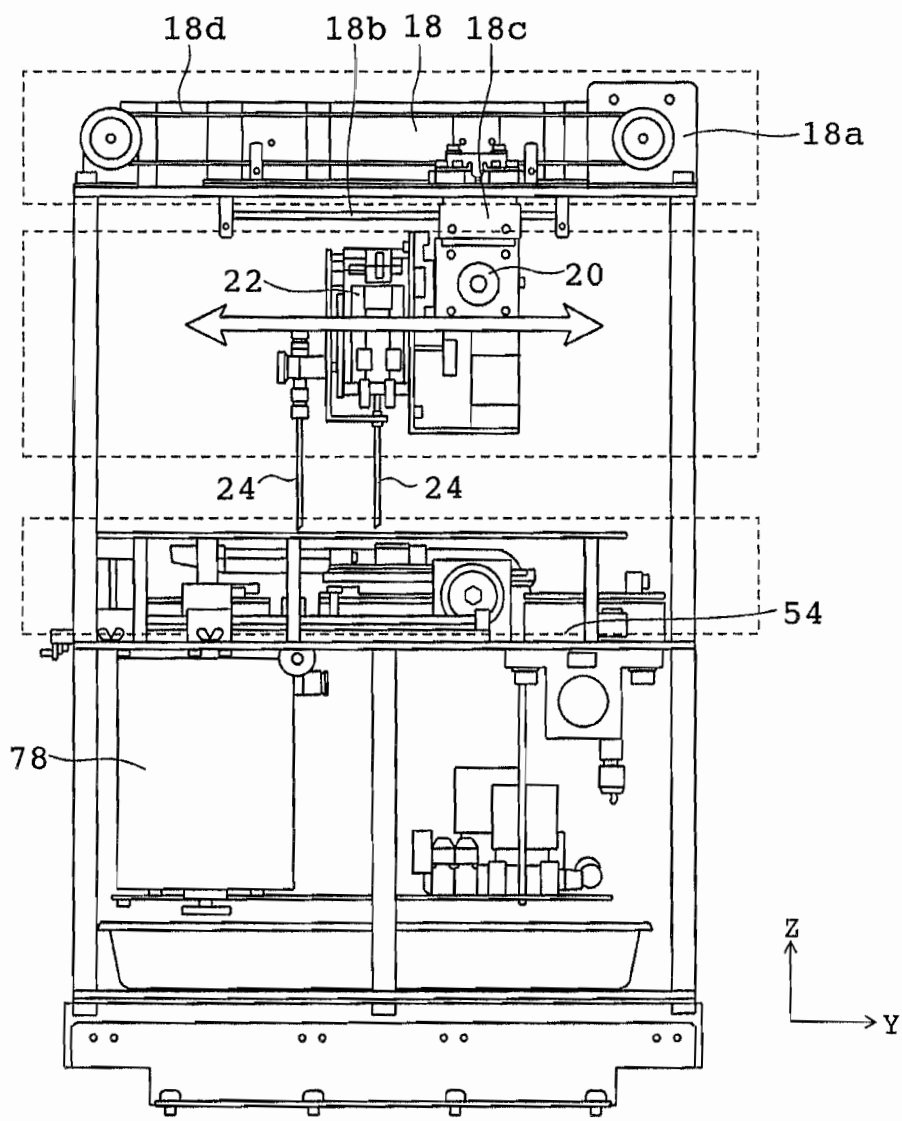

Fig.6-A

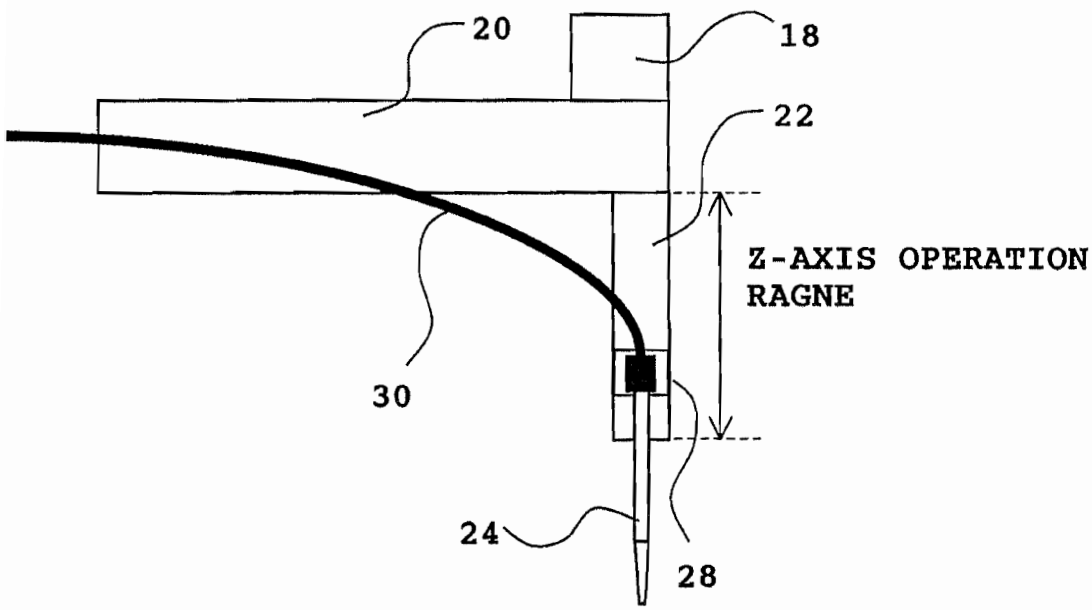
20
18
22
Z-AXIS OPERATION RAGNE
30
24
28

Fig.6-B

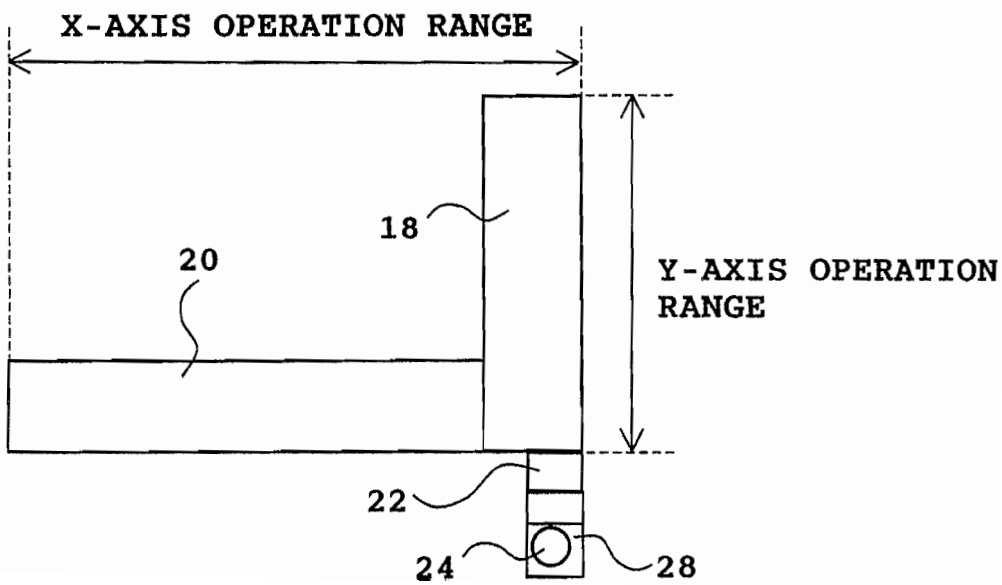
X-AXIS OPERATION RANGE
18
20
Y-AXIS OPERATION RANGE
22
24
28

Fig.7

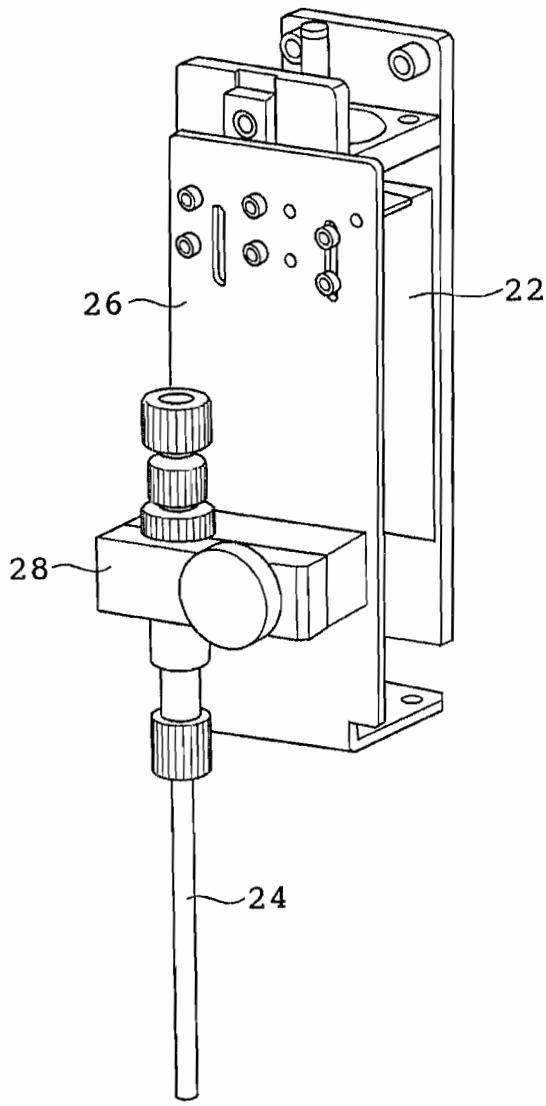

Fig.8-A

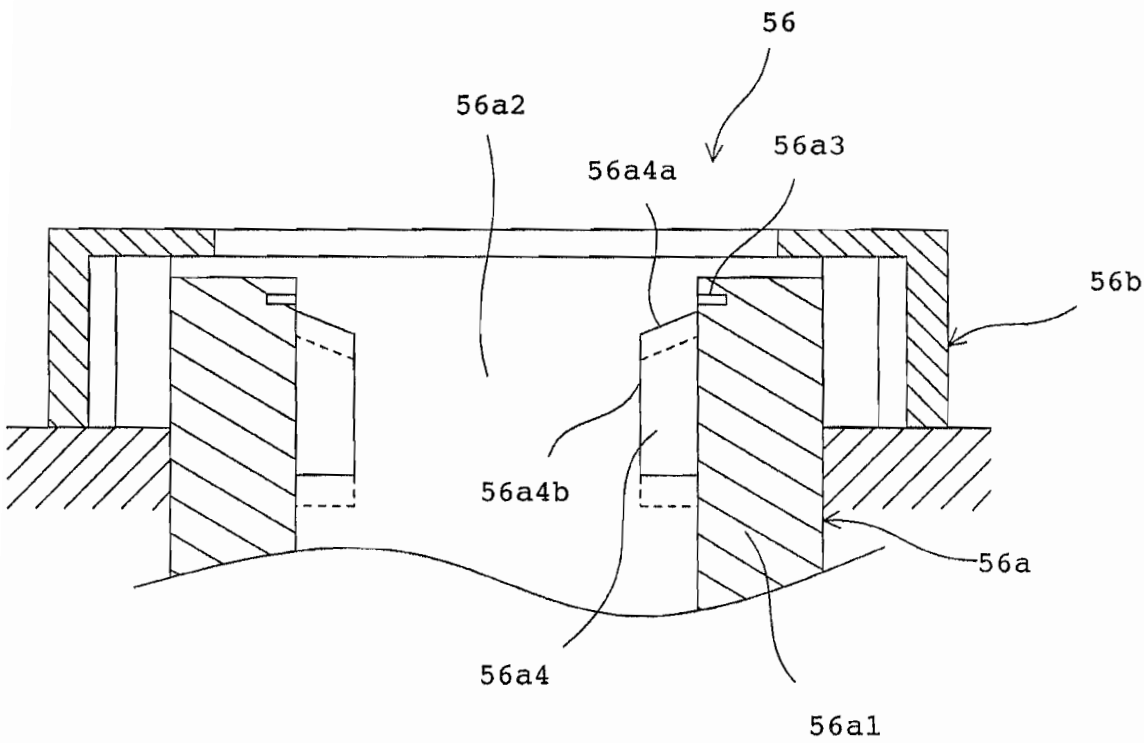
56
56a2
56a4a
56a3
56b
56a4b
56a
56a4
56a1

Fig.8-B

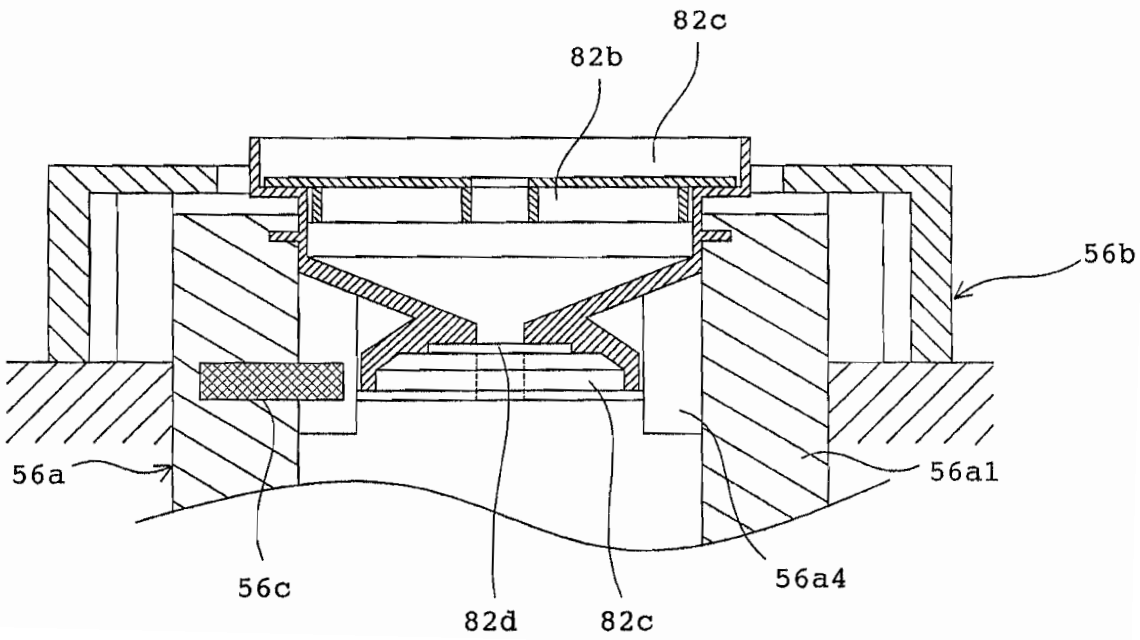
82c
82b
56b
56a
56a1
56c
56a4
82d
82c

Fig.9-A

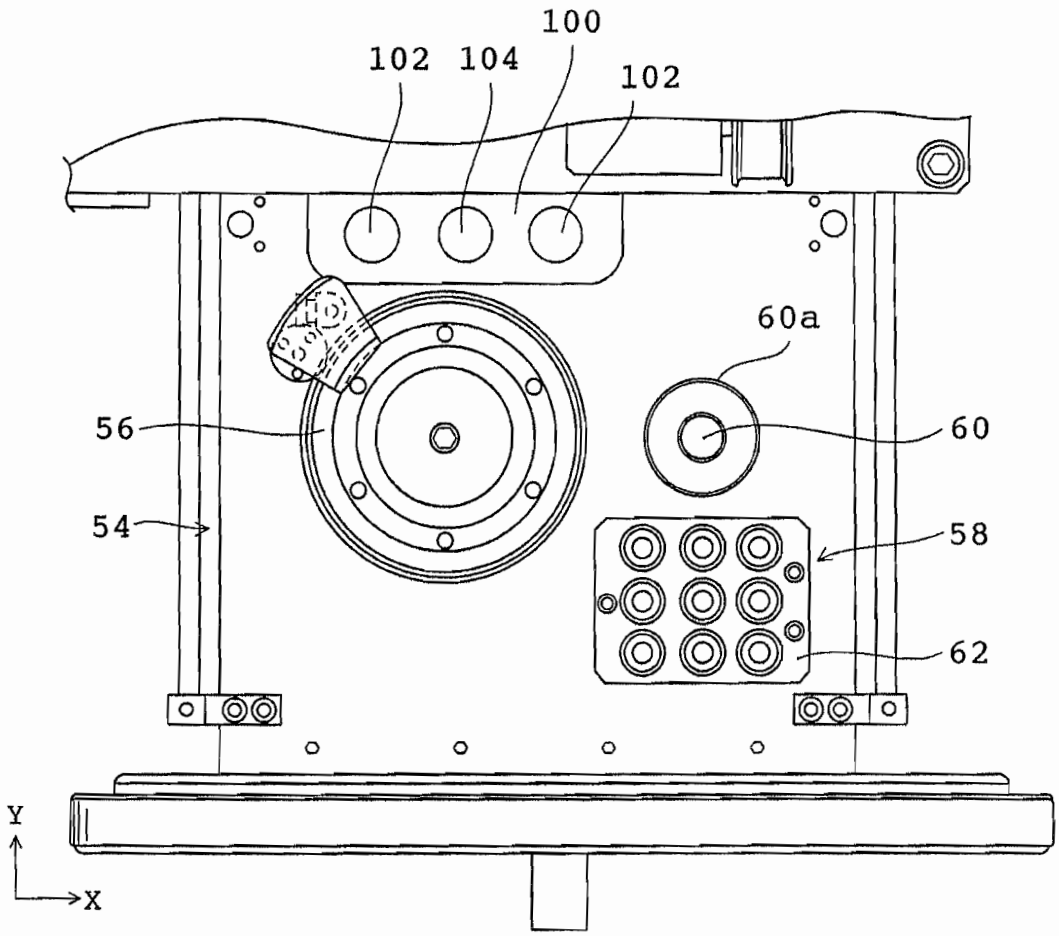

Fig.9-B

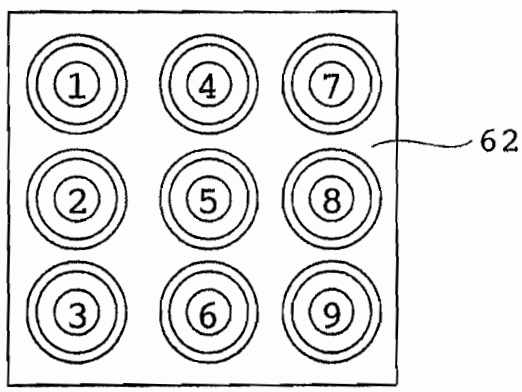

Fig.10

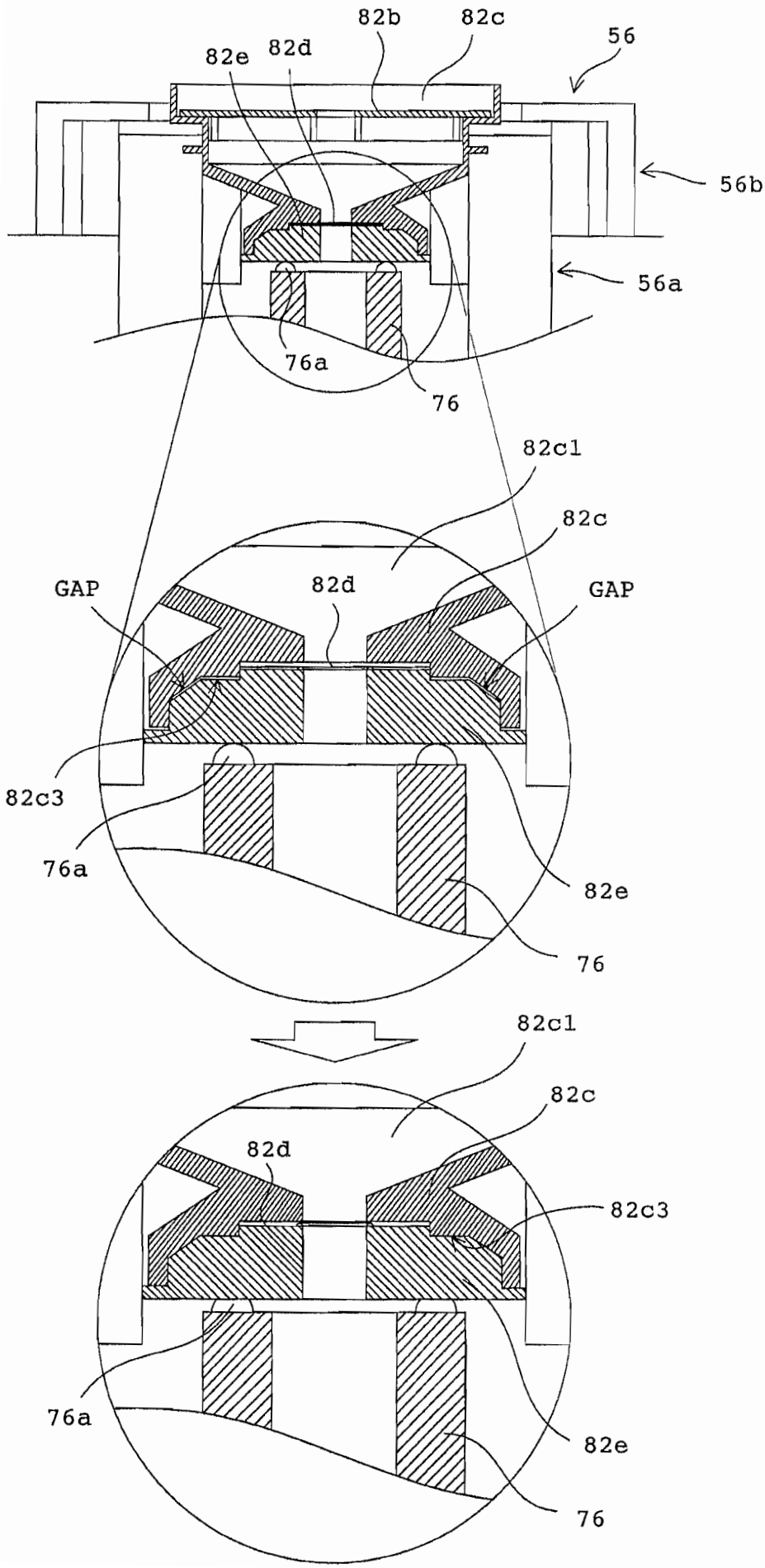
82b
82c
56
82e
82d
56b
56a
76a
76
82c1
82c
GAP
82d
GAP
82c3
76a
82e
76
82c1
82c
82d
82c3
76a
82e
76

Fig.11

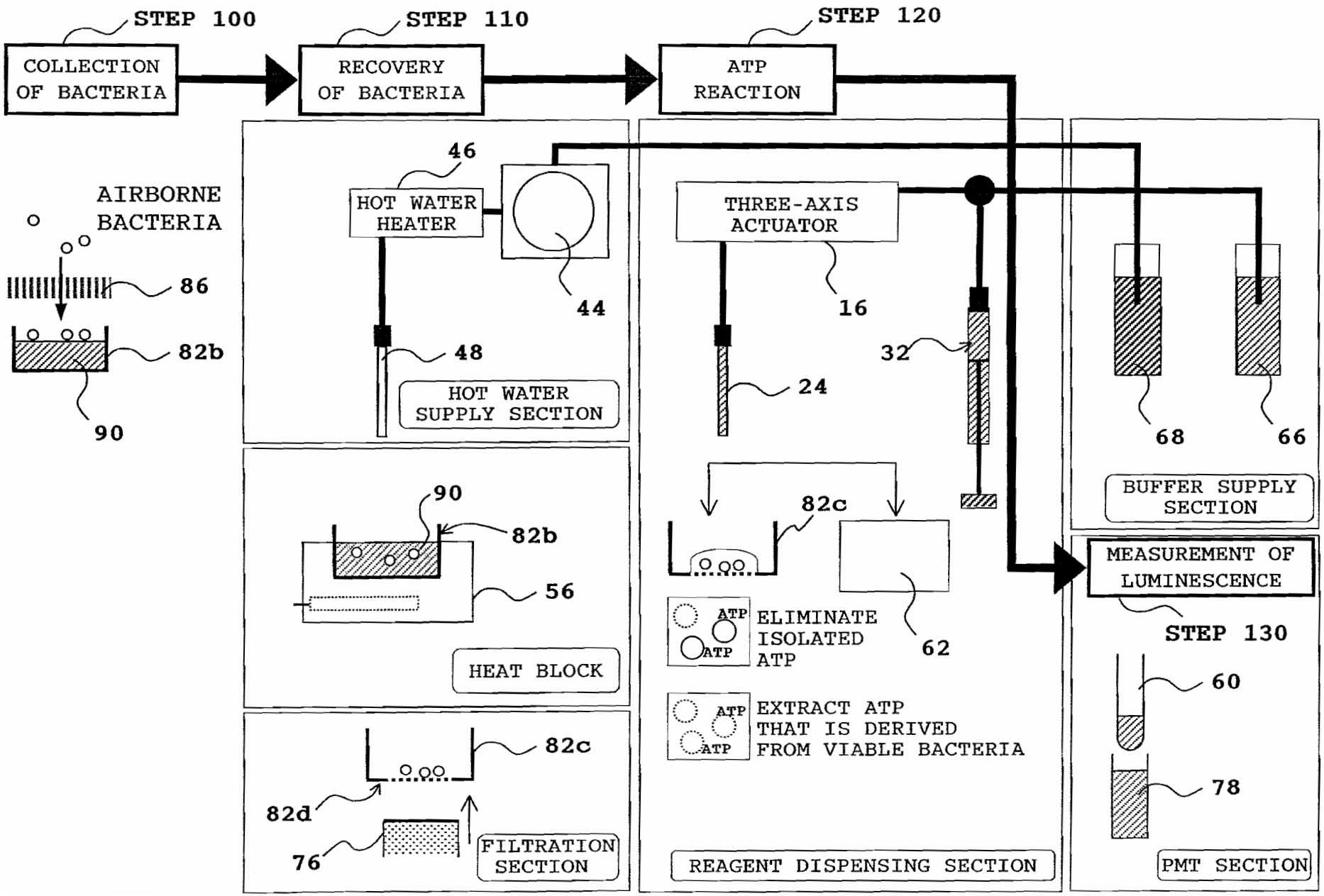
STEP 100
COLLECTION OF BACTERIA
STEP 110
RECOVERY OF BACTERIA
STEP 120
ATP REACTION
AIRBORNE BACTERIA
86
82b
90
46
HOT WATER HEATER
44
48
HOT WATER SUPPLY SECTION
THREE-AXIS ACTUATOR
16
24
32
68
66
BUFFER SUPPLY SECTION
90
82b
56
HEAT BLOCK
82c
ATP
ATP
ELIMINATE ISOLATED ATP
62
MEASUREMENT OF LUMINESCENCE
STEP 130
60
78
82c
82d
76
FILTRATION SECTION
ATP
ATP
EXTRACT ATP THAT IS DERIVED FROM VIABLE BACTERIA
REAGENT DISPENSING SECTION
PMT SECTION