[図1]

(a)

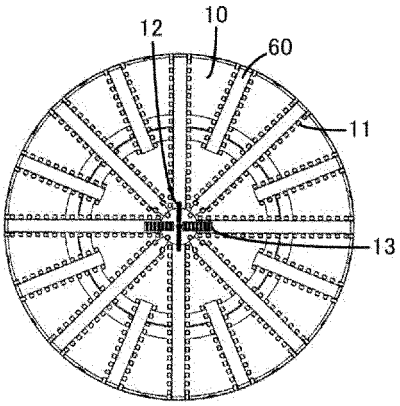

(b)

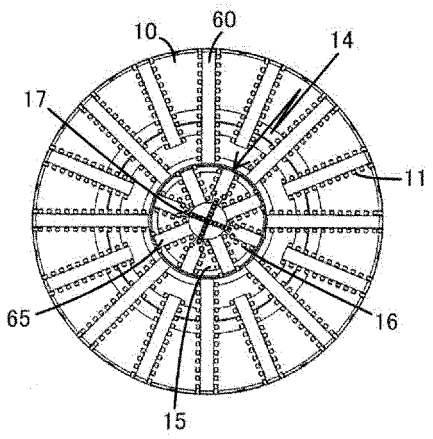

(c)

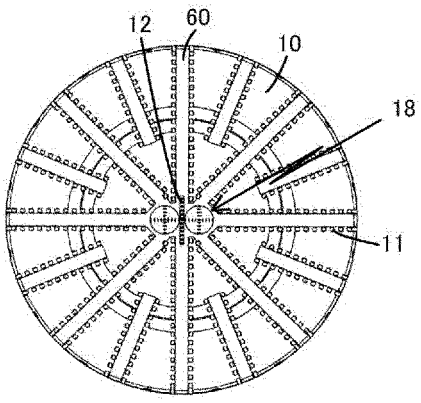

[図2]

(a)

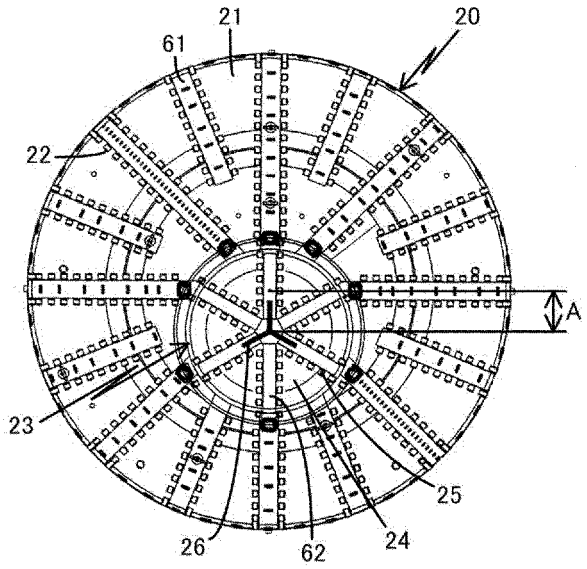

(b)

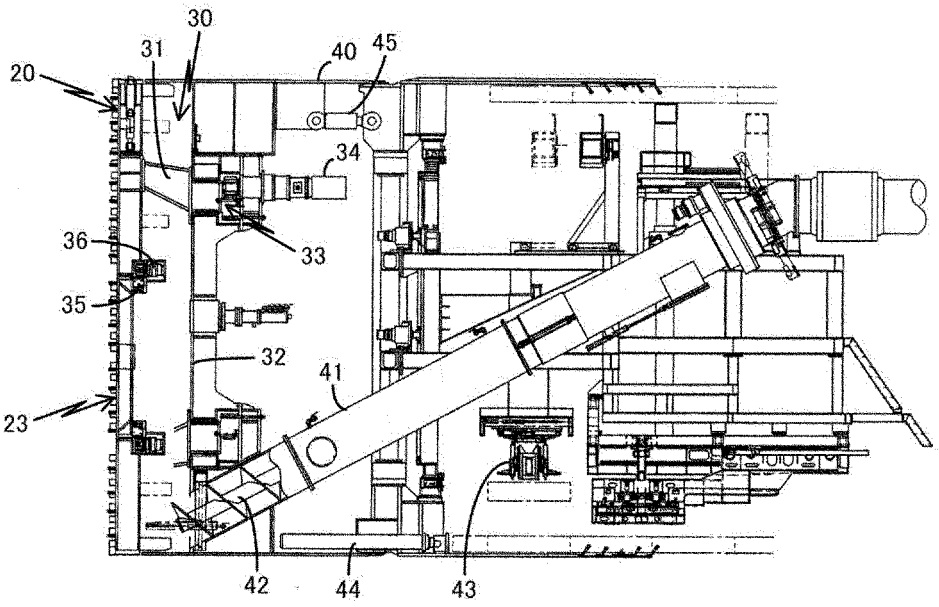

[図3]

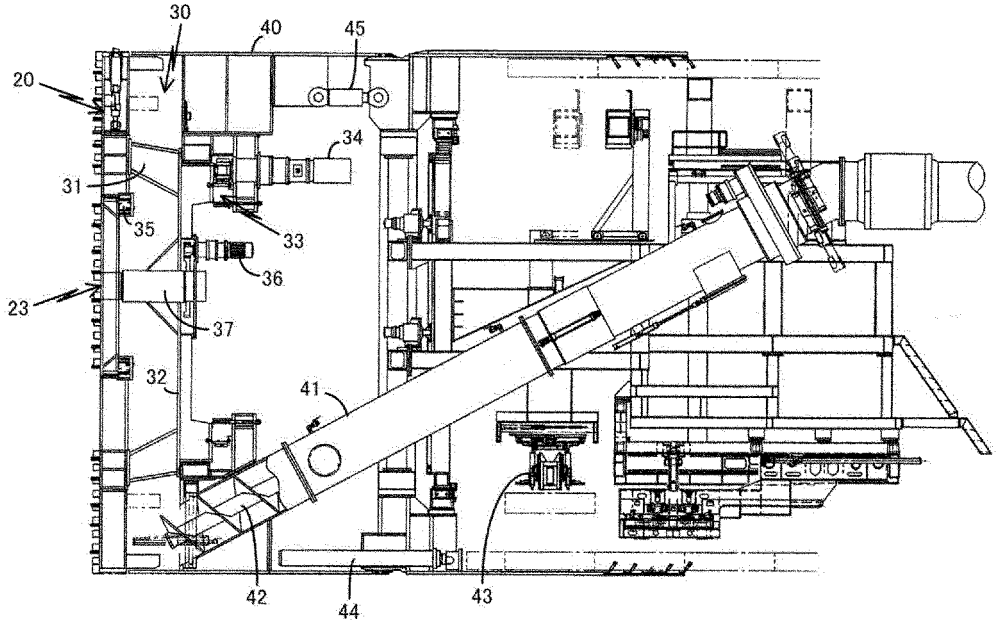

[図4]

(a)

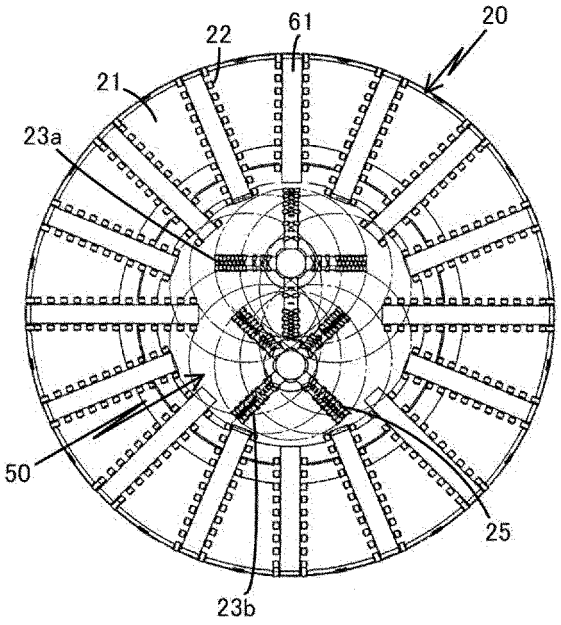
22
61
20
21
23a
50
25
23b

(b)

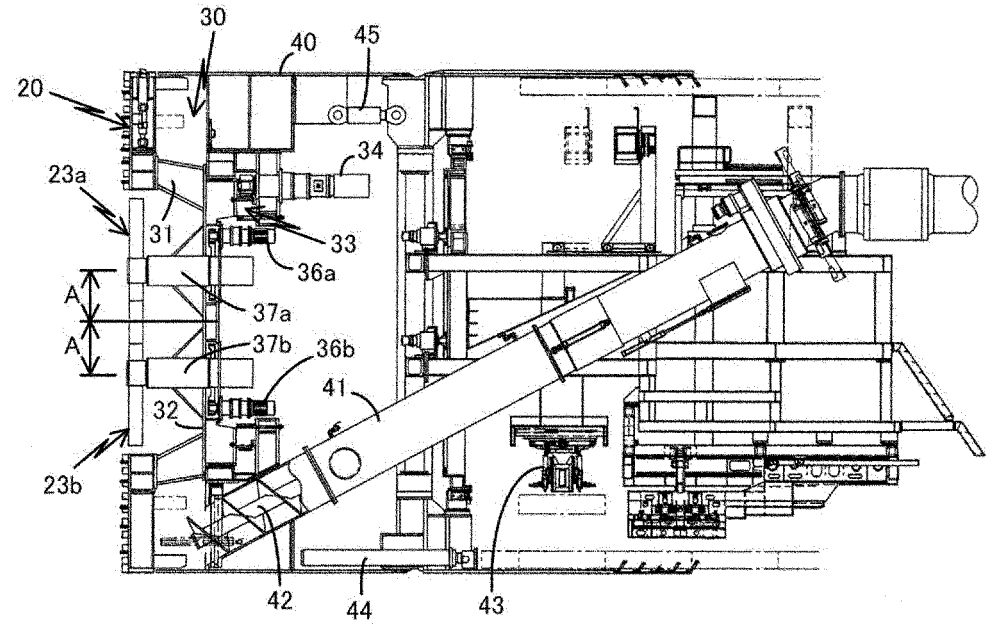
30
40
45
20
34
23a
31
33
36a
A
37a
A
37b
36b
41
32
23b
42
44
43