Claims

What is claimed is:

1. A compound of formula II

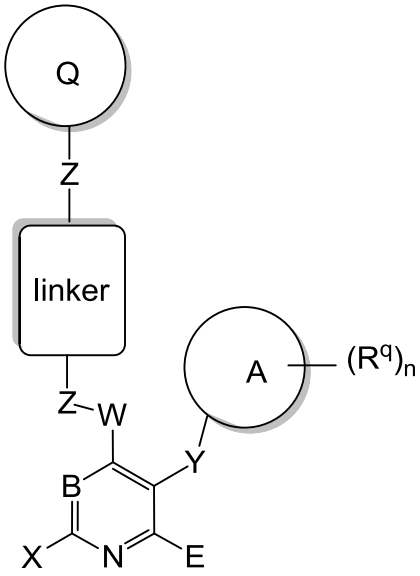

Formula (II),

wherein:

X	is H or CH3 or NH2,
Y	is H, Hal or is absent,
B	is N or CH,
E	is NH2 or H,
W	is NR, O or a cyclic amine,
Z	is, independently, CH_2, CH_3, CH_2-CH_2, CH-CH_2, H, NH or is absent,
"linker"	is $(CH_2)_n$, wherein: n is 1, 2 or 3or an optionally substituted group selected from a phenyl ring, an aryl ring, heteroaryl ring, branched or unbranched alkyl group, a 5-6 membered monocyclic heteroaryl ring having 1-4 heteroatoms independently selected from nitrogen, or oxygen, a 4-7 membered saturated or partially unsaturated heterocycle having 1-3 heteroatoms independently selected from nitrogen, or oxygen, or a 7-10 membered bicyclic saturated or partially unsaturated heterocyclic ring having 1-5 heteroatoms independently selected from nitrogen, or oxygen, or a 7-10 membered bicyclic saturated or partially unsaturated heterocyclic

ring having 1-5 heteroatoms attached to a hetero saturated ring. Linkers may also be cycloalkanes optionally substituted by heteroatoms (independently selected from nitrogen, or oxygen), cycloalkanes optionally substituted with -NH or OH, fused or bridged rings or optionally substituted spirocyclic rings that optionally contain heteroatoms,

A is a mono- or bicyclic aromatic homo- or heterocycle having 0, 1, 2, 3 or 4 N, and/or O atoms and 5, 6, 7, 8, 9, or 10 skeleton C atoms, which may be unsubstituted or, independently of one another, mono-, di- or trisubstituted by Hal, OH or OR,

Hal is F, Cl, Br or I,

R is independently hydrogen, oxygen or an optionally substituted group selected from C1-6 linear or cyclic aliphatic, benzyl, phenyl, a phenyl group optionally substituted with 1, 2 or 3 O atoms, a 4-7 membered heterocylic ring having 1-2 heteroatoms independently selected from nitrogen, oxygen, or a 5-6 membered monocyclic heteroaryl ring having 1-4 heteroatoms independently selected from nitrogen, or oxygen or a mono- or bicyclic aromatic homo- or heterocycle having 0, 1, 2, 3 or 4 N, O atoms and 5, 6, 7, or 8 C skeleton atoms, which may be unsubstituted or, independently of one another, mono-, di- or trisubstituted by Hal, A, OH, NH2, nitrile, and/or CH(Hal)3 or is an unbranched or branched linear alkyl having 1, 2, 3, 4, 5, 6, 7 or 8 C atoms, in which one or two CH2 groups may be replaced by an O atom and/or by an –NH-, -CO-, -NHCOO-, -NHCONH-, -CONH-, -NHCO- or –CH=CH– group, and in which 1 3 H atoms may be replaced by Hal,

R^q is selected from --R, --A, halogen, --OR, --O(CH2)rOR, --R(NH), --NO2, --C(O)R, --CO2R, --C(O)N(R)2, --NRC(O)R, --NRC(O)NR2, --NRSO2R, or --N(R)2,

r is 1-4,

n is 0-4, and

Q is an electrophilic group.

2. The compound according to Claim 1, wherein Q is

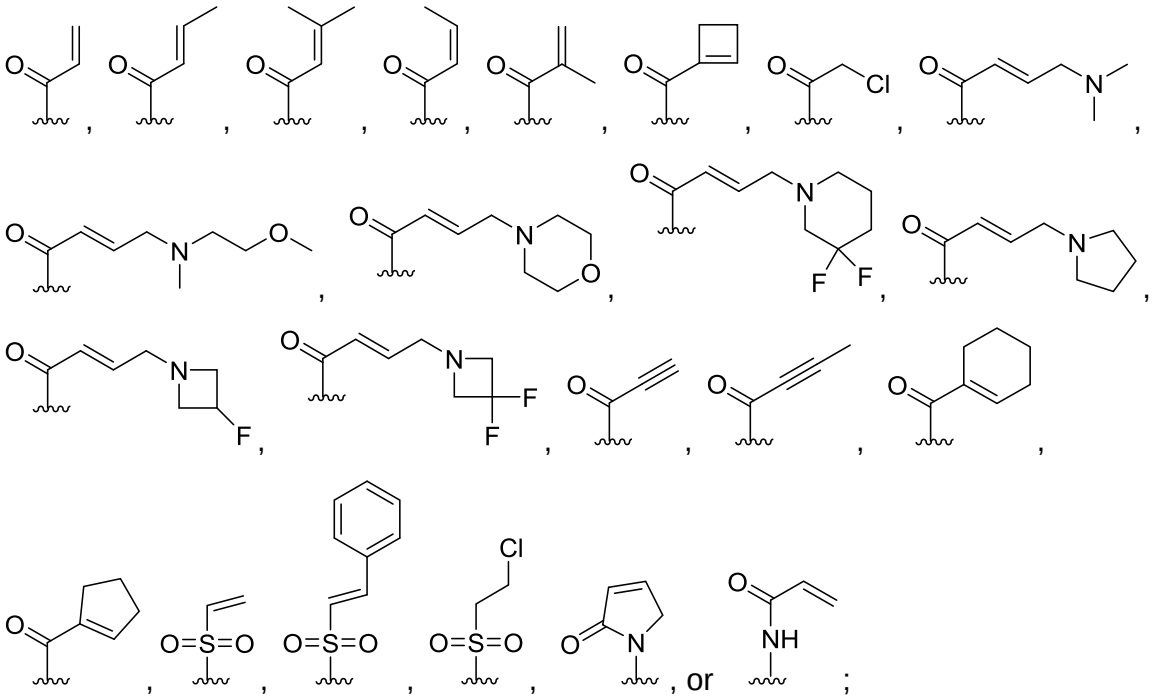

or a pharmaceutically acceptable salt, tautomer or stereoisomer thereof.

3. The compound according to Claim 2, wherein Q is

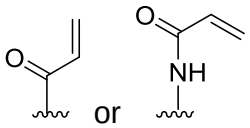

; or a pharmaceutically acceptable salt, tautomer or stereoisomer thereof.

4. The compound according to formula IV

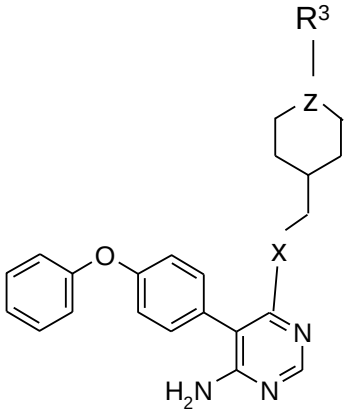

Formula (IV)

wherein:

Z is N or CH,

X is O or NH, and

R^3 is

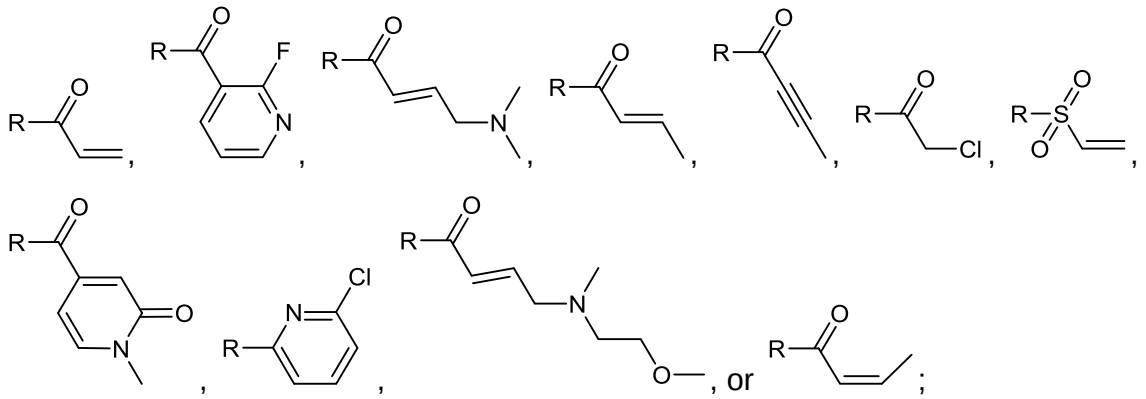

wherein, “R” denotes the bonding point to Z in Formula IV

or a pharmaceutically acceptable salt, tautomer or stereoisomer thereof.

5. The compound according to Claim 1, selected from the group

No.	Chemical Name
“A1”	(R)-1-(3-((6-amino-5-(4-phenoxyphenyl)pyrimidin-4-yl)amino)pyrrolidin-1-yl)prop-2-en-1-one
“A2”	(R)-1-(3-((6-amino-5-(4-phenoxyphenyl)pyrimidin-4-yl)oxy)piperidin-1-yl)prop-2-en-1-one
“A3”	N-(3-((6-amino-5-(4-phenoxyphenyl)pyrimidin-4-yl)amino)phenyl)acrylamide
“A4”	(R)-1-(3-(((6-amino-5-(4-phenoxyphenyl)pyrimidin-4-yl)amino)methyl)pyrrolidin-1-yl)prop-2-en-1-one
“A5”	N-((1-(6-amino-5-(4-phenoxyphenyl)pyrimidin-4-yl)pyrrolidin-3-yl)methyl)acrylamide
“A6”	1-(4-(((5-(4-phenoxyphenyl)pyrimidin-4-yl)oxy)methyl)piperidin-1-yl)prop-2-en-1-one
“A7”	N-((1-(6-amino-5-(4-phenoxyphenyl)pyrimidin-4-yl)piperidin-4-yl)methyl)acrylamide
“A8”	4-(4-(((6-amino-5-(4-phenoxyphenyl)pyrimidin-4-yl)amino)methyl)piperidine-1-carbonyl)-1-methylpyridin-2(1H)-one
“A9”	1-(4-(((6-amino-5-(4-phenoxyphenyl)pyrimidin-4-yl)oxy)methyl)piperidin-1-yl)but-2-yn-1-one
“A10”	5-(4-phenoxyphenyl)-N4-((1-(vinylsulfonyl)piperidin-4-yl)methyl)pyrimidine-4,6-diamine

“A11”	(E)-1-(4-(((6-amino-5-(4-phenoxyphenyl)pyrimidin-4-yl)amino)methyl)piperidin-1-yl)-4-((2-methoxyethyl)(methyl)amino)but-2-en-1-one
“A12”	(4-(((6-amino-5-(4-phenoxyphenyl)pyrimidin-4-yl)amino)methyl)piperidin-1-yl)(2-fluoropyridin-3-yl)methanone
“A13”	(E)-1-(4-(((6-amino-5-(4-phenoxyphenyl)pyrimidin-4-yl)amino)methyl)piperidin-1-yl)but-2-en-1-one
“A14”	N4-((1-(cyclopropylsulfonyl)piperidin-4-yl)methyl)-5-(4-phenoxyphenyl)pyrimidine-4,6-diamine
“A15”	(Z)-1-(4-(((6-amino-5-(4-phenoxyphenyl)pyrimidin-4-yl)amino)methyl)piperidin-1-yl)but-2-en-1-one
“A16”	1-(4-(2-((6-amino-5-(4-phenoxyphenyl)pyrimidin-4-yl)amino)ethyl)piperidin-1-yl)prop-2-en-1-one
“A17”	1-(3-(((6-amino-5-(4-phenoxyphenyl)pyrimidin-4-yl)oxy)methyl)piperidin-1-yl)prop-2-en-1-one
“A18”	N-(2-((6-amino-5-(4-phenoxyphenyl)pyrimidin-4-yl)amino)ethyl)acrylamide
“A19”	(R)-1-(3-((6-amino-5-(4-phenoxyphenyl)pyrimidin-4-yl)oxy)pyrrolidin-1-yl)prop-2-en-1-one
“A20”	N-(1-(((6-amino-5-(4-phenoxyphenyl)pyrimidin-4-yl)amino)methyl)cyclopentyl)acrylamide
“A21”	1-(3-(((6-amino-5-(4-phenoxyphenyl)pyrimidin-4-yl)oxy)methyl)pyrrolidin-1-yl)prop-2-en-1-one
“A22”	1-(4-(((5-fluoro-3-(4-phenoxyphenyl)pyridin-2-yl)amino)methyl)piperidin-1-yl)prop-2-en-1-one
“A23”	1-(4-(((6-amino-5-(4-phenoxyphenyl)pyrimidin-4-yl)amino)methyl)piperidin-1-yl)ethanone
“A24”	(E)-7-(3-(4-(4-((3-((6-amino-5-(4-phenoxyphenyl)pyrimidin-4-yl)oxy)phenyl)amino)-4-oxobut-2-en-1-yl)piperazin-1-yl)-3-oxopropyl)-5,5-difluoro-1,3-dimethyl-5H-dipyrrolo[1,2-c:2',1'-f][1,3,2]diazaborinin-4-ium-5-uide
“A25”	1-(4-(((2-amino-5-(4-phenoxyphenyl)pyrimidin-4-yl)amino)methyl)piperidin-1-yl)prop-2-en-1-one

“A26”	(S)-1-(3-(((6-amino-5-(4-phenoxyphenyl)pyrimidin-4-yl)oxy)methyl)pyrrolidin-1-yl)prop-2-en-1-one
“A27”	N-(2-((6-amino-5-(4-phenoxyphenyl)pyrimidin-4-yl)oxy)ethyl)acrylamide
“A28”	(S)-1-(3-(((6-amino-5-(4-phenoxyphenyl)pyrimidin-4-yl)amino)methyl)pyrrolidin-1-yl)prop-2-en-1-one
“A29”	1-(4-(((6-amino-5-(4-phenoxyphenyl)pyrimidin-4-yl)amino)methyl)piperidin-1-yl)-2-methylprop-2-en-1-one
“A30”	(4-(((6-amino-5-(4-phenoxyphenyl)pyrimidin-4-yl)amino)methyl)piperidin-1-yl)(cyclohex-1-en-1-yl)methanone
“A31”	1-(4-(((6-amino-5-(4-phenoxyphenyl)pyrimidin-4-yl)amino)methyl)piperidin-1-yl)-3-methylbut-2-en-1-one
“A32”	(4-(((6-amino-5-(4-phenoxyphenyl)pyrimidin-4-yl)amino)methyl)piperidin-1-yl)(cyclopent-1-en-1-yl)methanone
“A33”	1-(4-(((6-amino-5-(1-benzyl-1H-pyrazol-4-yl)pyrimidin-4-yl)amino)methyl)piperidin-1-yl)prop-2-en-1-one
“A34”	1-(4-(((6-amino-5-(4-(3-fluorophenoxy)phenyl)pyrimidin-4-yl)amino)methyl)piperidin-1-yl)prop-2-en-1-one
“A35”	(E)-7-(3-((2-(4-(4-((3-((6-amino-5-(4-phenoxyphenyl)pyrimidin-4-yl)oxy)phenyl)amino)-4-oxobut-2-en-1-yl)piperazin-1-yl)ethyl)amino)-3-oxopropyl)-5,5-difluoro-1,3-dimethyl-5H-dipyrrolo[1,2-c:2',1'-f][1,3,2]diazaborinin-4-ium-5-uide
“A36”	1-(4-(((6-amino-2-methyl-5-(4-phenoxyphenyl)pyrimidin-4-yl)amino)methyl)piperidin-1-yl)prop-2-en-1-one
“A37”	1-(4-(((6-amino-5-(4-phenoxyphenyl)pyrimidin-4-yl)amino)methyl)-4-hydroxypiperidin-1-yl)prop-2-en-1-one
“A38”	
“A39”	1-(4-(((6-amino-5-(4-(phenylamino)phenyl)pyrimidin-4-yl)amino)methyl)piperidin-1-yl)prop-2-en-1-one
“A40”	1-(3-((6-amino-5-(4-phenoxyphenyl)pyrimidin-4-yl)oxy)phenyl)-1H-pyrrol-2(5H)-one
“A41”	1-(4-(((6-amino-5-(4-benzylphenyl)pyrimidin-4-yl)amino)methyl)piperidin-1-yl)prop-2-en-1-one

“A42”	(4-(((6-amino-5-(4-phenoxyphenyl)pyrimidin-4-yl)amino)methyl)piperidin-1-yl)(cyclobut-1-en-1-yl)methanone
“A43”	(Z)-1-(4-(((6-amino-5-(4-phenoxyphenyl)pyrimidin-4-yl)oxy)methyl)piperidin-1-yl)but-2-en-1-one
“A44”	1-(4-(((6-amino-2-methyl-5-(4-phenoxyphenyl)pyrimidin-4-yl)(methyl)amino)methyl)piperidin-1-yl)prop-2-en-1-one
“A45”	1-(4-(((6-amino-5-(4-phenoxyphenyl)pyrimidin-4-l)amino)methyl)piperidin-1-yl)-2-chloroethanone
“A46”	1-(4-(((6-amino-5-(4-phenoxyphenyl)pyrimidin-4-l)amino)methyl)piperidin-1-yl)prop-2-yn-1-one
“A47”	1-(4-(((6-amino-5-(4-phenoxyphenyl)pyrimidin-4-yl)(methyl)amino)methyl)piperidin-1-yl)prop-2-en-1-one
“A48”	1-(3-(((6-amino-5-(4-phenoxyphenyl)pyrimidin-4-yl)amino)methyl)-8-azabicyclo[3.2.1]octan-8-yl)prop-2-en-1-one
“A49”	N-((1S,3S)-3-((6-amino-5-(4-phenoxyphenyl)pyrimidin-4-yl)amino)cyclopentyl)acrylamide
“A50”	N-(4-((6-amino-5-(4-phenoxyphenyl)pyrimidin-4-yl)amino)butyl)acrylamide
“A51”	N-(cis-3-((6-amino-5-(4-phenoxyphenyl)pyrimidin-4-yl)amino)cyclohexyl)acrylamide
“A52”	1-(3-((6-amino-5-(4-phenoxyphenyl)pyrimidin-4-yl)amino)azepan-1-yl)prop-2-en-1-one
“A53”	N-(trans-3-((6-amino-5-(4-phenoxyphenyl)pyrimidin-4-yl)amino)cyclohexyl)acrylamide
“A54”	(E)-5-(4-phenoxyphenyl)-N4-((1-(styrylsulfonyl)piperidin-4-yl)methyl)pyrimidine-4,6-diamine
“A55”	N4-((1-(methylsulfonyl)piperidin-4-yl)methyl)-5-(4-phenoxyphenyl)pyrimidine-4,6-diamine
“A56”	1-(4-(((6-amino-5-(4-phenoxyphenyl)pyrimidin-4-yl)amino)methyl)piperidin-1-yl)-2,3-dihydroxypropan-1-one
“A57”	4-(((6-amino-5-(4-phenoxyphenyl)pyrimidin-4-yl)amino)methyl)piperidin-2-one
“A58”	N-(3-((6-amino-5-(4-phenoxyphenyl)pyrimidin-4-yl)oxy)phenyl)ethenesulfonamide

“A59”	N-(3-((6-amino-5-(4-phenoxyphenyl)pyrimidin-4-yl)amino)propyl)acrylamide
“A60”	N-(5-((6-amino-5-(4-phenoxyphenyl)pyrimidin-4-yl)oxy)pyridin-3-yl)acrylamide
“A61”	(R)-1-(3-(((6-amino-5-(4-phenoxyphenyl)pyrimidin-4-yl)amino)methyl)pyrrolidin-1-yl)prop-2-yn-1-one
“A62”	(R,E)-1-(3-(((6-amino-5-(4-phenoxyphenyl)pyrimidin-4-yl)amino)methyl)pyrrolidin-1-yl)-4-(dimethylamino)but-2-en-1-one
“A63”	(E)-N-(cis-3-((6-amino-5-(4-phenoxyphenyl)pyrimidin-4-yl)amino)cyclohexyl)-4-(dimethylamino)but-2-enamide
“A64”	N-(cis-3-((6-amino-5-(4-phenoxyphenyl)pyrimidin-4-yl)amino)cyclohexyl)propiolamide
“A65”	(S)-1-(2-(((6-amino-5-(4-phenoxyphenyl)pyrimidin-4-yl)oxy)methyl)morpholino)prop-2-en-1-one
“A66”	(R)-1-(2-(((6-amino-5-(4-phenoxyphenyl)pyrimidin-4-yl)oxy)methyl)morpholino)prop-2-en-1-one
“A67”	N-(3-((6-amino-5-(1-(3-fluorobenzyl)-1H-pyrazol-4-yl)pyrimidin-4-yl)oxy)phenyl)acrylamide
“A68”	1-(3-(((6-amino-5-(4-phenoxyphenyl)pyrimidin-4-yl)amino)methyl)-8-azabicyclo[3.2.1]octan-8-yl)prop-2-yn-1-one
“A69”	N-(3-((6-amino-5-(1-(4-cyanobenzyl)-1H-pyrazol-4-yl)pyrimidin-4-yl)oxy)phenyl)acrylamide
“A70”	N-(3-((6-amino-5-(1-benzyl-1H-pyrazol-4-yl)pyrimidin-4-yl)amino)phenyl)acrylamide
“A71”	(E)-1-(3-(((6-amino-5-(4-phenoxyphenyl)pyrimidin-4-yl)amino)methyl)-8-azabicyclo[3.2.1]octan-8-yl)-4-(dimethylamino)but-2-en-1-one
“A72”	N-(3-((6-amino-5-(1-(4-methoxybenzyl)-1H-pyrazol-4-yl)pyrimidin-4-yl)oxy)phenyl)acrylamide
“A73”	(R,E)-1-(3-((6-amino-5-(4-phenoxyphenyl)pyrimidin-4-yl)amino)pyrrolidin-1-yl)-4-(dimethylamino)but-2-en-1-one
“A74”	(R,E)-1-(3-((6-amino-5-(4-phenoxyphenyl)pyrimidin-4-yl)amino)piperidin-1-yl)-4-(dimethylamino)but-2-en-1-one
“A75”	1-(trans-3-((6-amino-5-(4-phenoxyphenyl)pyrimidin-4-yl)amino)-4-hydroxypyrrolidin-1-yl)prop-2-en-1-one

“A76”	1-(4-(((2-amino-3-(4-phenoxyphenyl)pyridin-4-yl)amino)methyl)piperidin-1-yl)prop-2-en-1-one
“A77”	1-(4-(((6-amino-5-(4-fluorophenyl)pyrimidin-4-yl)amino)methyl)piperidin-1-yl)prop-2-en-1-one
“A78”	1-(4-(((6-amino-5-(4-(trifluoromethoxy)phenyl)pyrimidin-4-yl)amino)methyl)piperidin-1-yl)prop-2-en-1-one
“A79”	1-(4-(((6-amino-5-(4-(4-(trifluoromethyl)phenoxy)phenyl)pyrimidin-4-yl)amino)methyl)piperidin-1-yl)prop-2-en-1-one
“A80”	1-(4-(((6-amino-5-(4-(4-(fluorophenoxy)phenyl)pyrimidin-4-yl)amino)methyl)piperidin-1-yl)prop-2-en-1-one
“A81”	1-(4-(((6-amino-5-(4-(trifluoromethyl)phenyl)pyrimidin-4-yl)amino)methyl)piperidin-1-yl)prop-2-en-1-one
“A82”	1-(4-(((6-amino-5-(3,4-dimethoxyphenyl)pyrimidin-4-yl)amino)methyl)piperidin-1-yl)prop-2-en-1-one
“A83”	1-(4-(((6-amino-5-(3,4,5-trimethoxyphenyl)pyrimidin-4-yl)amino)methyl)piperidin-1-yl)prop-2-en-1-one
“A84”	1-(4-(((6-amino-5-(2,3-dihydrobenzo[b][1,4]dioxin-6-yl)pyrimidin-4-yl)amino)methyl)piperidin-1-yl)prop-2-en-1-one
“A85”	1-(4-(((6-amino-5-(4-methoxyphenyl)pyrimidin-4-yl)amino)methyl)piperidin-1-yl)prop-2-en-1-one
“A86”	4-(4-(4-(((1-acryloylpiperidin-4-yl)methyl)amino)-6-aminopyrimidin-5-yl)phenoxy)benzonitrile
“A87”	1-(4-(((6-amino-5-(2,5-difluoro-4-phenoxyphenyl)pyrimidin-4-yl)amino)methyl)piperidin-1-yl)prop-2-en-1-one
“A88”	1-(4-(((6-amino-5-(2,3-difluoro-4-phenoxyphenyl)pyrimidin-4-yl)amino)methyl)piperidin-1-yl)prop-2-en-1-one
“A89”	1-(4-(((6-amino-5-(4-((1-methylpiperidin-4-yl)oxy)phenyl)pyrimidin-4-yl)amino)methyl)piperidin-1-yl)prop-2-en-1-one
“A90”	1-(4-(((6-amino-5-(4-phenoxy-2-(trifluoromethyl)phenyl)pyrimidin-4-yl)amino)methyl)piperidin-1-yl)prop-2-en-1-one
“A91”	1-(2-(6-amino-5-(4-phenoxyphenyl)pyrimidin-4-yl)-2,7-diazaspiro[3.5]nonan-7-yl)prop-2-en-1-one
“A92”	1-(8-(6-amino-5-(4-phenoxyphenyl)pyrimidin-4-yl)-2,8-diazaspiro[4.5]decan-2-yl)prop-2-en-1-one

“A93”	1-(7-(6-amino-5-(4-phenoxyphenyl)pyrimidin-4-yl)-2,7-diazaspiro[4.4]nonan-2-yl)prop-2-en-1-one
“A94”	1-(4-(((6-amino-5-(4-(4-hydroxyphenoxy)phenyl)pyrimidin-4-yl)amino)methyl)piperidin-1-yl)prop-2-en-1-one
“A95”	1-(4-(((6-amino-5-(4-(3-(trifluoromethyl)phenoxy)phenyl)pyrimidin-4-yl)amino)methyl)piperidin-1-yl)prop-2-en-1-one
“A96”	1-(4-(((6-amino-5-(4-(pyridin-3-yloxy)phenyl)pyrimidin-4-yl)amino)methyl)piperidin-1-yl)prop-2-en-1-one
“A97”	1-(4-(((6-amino-5-(4-(pyridin-4-yloxy)phenyl)pyrimidin-4-yl)amino)methyl)piperidin-1-yl)prop-2-en-1-one
“A98”	1-(4-(((6-amino-5-(4-(p-tolyloxy)phenyl)pyrimidin-4-yl)amino)methyl)piperidin-1-yl)prop-2-en-1-one
“A99”	1-(4-(((6-amino-5-(4-(cyclohexyloxy)phenyl)pyrimidin-4-yl)amino)methyl)piperidin-1-yl)prop-2-en-1-one
“A100”	N4-((1R,5S,6r)-3-azabicyclo[3.1.0]hexan-6-ylmethyl)-5-(4-phenoxyphenyl)pyrimidine-4,6-diamine hydrochloride
“A101”	(3S,4S)-4-(((6-amino-5-(4-phenoxyphenyl)pyrimidin-4-yl)amino)methyl)piperidin-3-ol hydrochloride
“A102”	(E)-1-(6-((6-amino-5-chloropyrimidin-4-yl)oxy)-2-azaspiro[3.3]heptan-2-yl)-4-(dimethylamino)but-2-en-1-one
“A103”	1-(3-(2-((6-amino-5-(4-phenoxyphenyl)pyrimidin-4-yl)amino)ethyl)azetidin-1-yl)prop-2-en-1-one
“A104”	1-(3-(2-((6-amino-5-(4-phenoxyphenyl)pyrimidin-4-yl)amino)ethyl)azetidin-1-yl)prop-2-yn-1-one
“A105”	(E)-1-(6-((6-amino-5-(4-phenoxyphenyl)pyrimidin-4-yl)oxy)-2-azaspiro[3.3]heptan-2-yl)-4-(dimethylamino)but-2-en-1-one
“A106”	1-(6-((6-amino-5-(1-benzyl-1H-pyrazol-4-yl)pyrimidin-4-yl)oxy)-2-azaspiro[3.3]heptan-2-yl)prop-2-en-1-one
“A107”	1-(6-((6-amino-5-(1-benzyl-1H-pyrazol-4-yl)pyrimidin-4-yl)amino)-2-azaspiro[3.3]heptan-2-yl)prop-2-en-1-one
“A108”	1-(6-((6-amino-5-(4-phenoxyphenyl)pyrimidin-4-yl)amino)-2-azaspiro[3.3]heptan-2-yl)but-2-yn-1-one
“A109”	1-((3S,4S)-4-(((6-amino-5-(1-benzyl-1H-pyrazol-4-yl)pyrimidin-4-yl)amino)methyl)-3-hydroxypiperidin-1-yl)prop-2-en-1-one

“A110”	1-((3S,4S)-4-(((6-amino-5-(1-benzyl-1H-pyrazol-4-yl)pyrimidin-4-yl)amino)methyl)-3-hydroxypiperidin-1-yl)prop-2-yn-1-one
“A111”	1-(6-((6-amino-5-(1-benzyl-1H-pyrazol-4-yl)pyrimidin-4-yl)amino)-2-azaspiro[3.3]heptan-2-yl)prop-2-yn-1-one
“A112”	1-(6-((6-amino-5-(1-benzyl-1H-pyrazol-4-yl)pyrimidin-4-yl)oxy)-2-azaspiro[3.3]heptan-2-yl)prop-2-yn-1-one
“A113”	1-(2-((6-amino-5-(4-phenoxyphenyl)pyrimidin-4-yl)amino)-6-azaspiro[3.4]octan-6-yl)prop-2-en-1-one
“A114”	1-(6-((6-amino-5-(4-(pyridin-4-yloxy)phenyl)pyrimidin-4-yl)oxy)-2-azaspiro[3.3]heptan-2-yl)prop-2-en-1-one
“A115”	1-(2-((6-amino-5-(4-phenoxyphenyl)pyrimidin-4-yl)amino)-6-azaspiro[3.4]octan-6-yl)prop-2-yn-1-one
“A116”	1-(6-((6-amino-5-(1-(pyridin-4-ylmethyl)-1H-pyrazol-4-yl)pyrimidin-4-yl)amino)-2-azaspiro[3.3]heptan-2-yl)prop-2-en-1-one
“A117”	N-(1,3-trans-3-((6-amino-5-(4-phenoxyphenyl)pyrimidin-4-yl)amino)cyclobutyl)acrylamide
“A118”	N-((1,3-cis-3-((6-amino-5-(4-phenoxyphenyl)pyrimidin-4-yl)amino)cyclobutyl)acrylamide
“A119”	N4-(2-((2-chloroethyl)sulfonyl)-2-azaspiro[3.3]heptan-6-yl)-5-(4-phenoxyphenyl)pyrimidine-4,6-diamine
“A120”	1-(6-((6-amino-5-(4-phenoxyphenyl)pyrimidin-4-yl)oxy)-2-azaspiro[3.3]heptan-2-yl) prop-2-en-1-one
“A121”	1-(4-(((6-amino-5-(4-phenoxyphenyl)pyrimidin-4-yl)amino)methyl)-4-methoxypiperidin-1-yl)prop-2-en-1-one
“A122”	N-(6-((6-amino-5-(4-phenoxyphenyl)pyrimidin-4-yl)amino)spiro[3.3]heptan-2-yl)acrylamide
“A123”	1-(1-((6-amino-5-(4-phenoxyphenyl)pyrimidin-4-yl)amino)-7-azaspiro[3.5]nonan-7-yl)prop-2-en-1-one
“A124”	1-(6-((6-amino-5-(4-phenoxyphenyl)pyrimidin-4-yl)amino)-2-azaspiro[3.3]heptan-2-yl)prop-2-en-1-one
“A125”	1-(8-((6-amino-5-(4-phenoxyphenyl)pyrimidin-4-yl)amino)-5-azaspiro[3.5]nonan-5-yl)prop-2-en-1-one

“A126”	(E)-1-((3S,4S)-4-(((6-amino-5-(4-phenoxyphenyl)pyrimidin-4-yl)amino)methyl)-3-hydroxypiperidin-1-yl)-4-(dimethylamino)but-2-en-1-one
“A127”	(E)-1-(6-((6-amino-5-(4-phenoxyphenyl)pyrimidin-4-yl)amino)-2-azaspiro[3.3]heptan-2-yl)-4-(dimethylamino)but-2-en-1-one
“A128”	3-((6-Amino-5-chloro-pyrimidin-4-ylamino)-methyl)-benzoic acid methyl ester
“A129”	Trans-3-(6-Amino-5-chloro-pyrimidin-4-ylamino)-cyclohexanecarboxylic acid methyl ester
“A130”	(1R,3S)-3-(6-Amino-5-chloro-pyrimidin-4-ylamino)-cyclohexanecarboxylic acid methyl ester
“A131”	3-((6-Amino-5-(4-phenoxy-phenyl)-pyrimidin-4-ylamino)-methyl)-benzoic acid methyl ester
“A132”	Trans-3-(6-amino-5-(4-phenoxyphenyl)-pyrimidin-4-ylamino)-cyclohexanecarboxylic acid methyl ester
“A133”	(1R,3S)-3-(6-Amino-5-(4-phenoxyphenyl)-pyrimidin-4-ylamino)-cyclohexanecarboxylic acid methyl ester
“A134”	-((6-Amino-5-(4-phenoxy-phenyl)-pyrimidin-4-ylamino)-methyl)-benzoic acid
“A135”	(1S,3S)-3-(6-Amino-5-(4-phenoxyphenyl)-pyrimidin-4-ylamino)-cyclohexanecarboxylic acid
“A136”	(1R,3S)-3-(6-Amino-5-(4-phenoxyphenyl)-pyrimidin-4-ylamino)-cyclohexanecarboxylic acid
“A137”	(4-(6-Amino-5-(4-phenoxyphenyl)-pyrimidin-4-ylamino)-phenyl)-N-methoxy-N-methyl-acetamide
“A138”	3-((6-Amino-5-(4-phenoxy-phenyl)-pyrimidin-4-ylamino)-methyl)-N-methoxy-N-methyl-benzamide
“A139”	(1S,3S)-3-(6-Amino-5-(4-phenoxyphenyl)-pyrimidin-4-ylamino)-cyclohexanecarboxylic acid methoxy-methyl-amide
“A140”	(1R,3S)-3-(6-Amino-5-(4-phenoxyphenyl)-pyrimidin-4-ylamino)-cyclohexanecarboxylic acid methoxy-methyl-amide
“A141”	1-(3-((6-Amino-5-(4-phenoxyphenyl)-pyrimidin-4-ylamino)-methyl)-phenyl)-but-2-yn-1-one

“A142”	1-(3-((6-Amino-5-(4-phenoxyphenyl)-pyrimidin-4-ylamino)-methyl)-phenyl)-but-2-en-1-one
“A143”	1-((1S,3S)-3-(6-Amino-5-(4-phenoxyphenyl)-pyrimidin-4-ylamino)-cyclohexyl)-propenone
“A144”	1-((1S,3S)-3-(6-Amino-5-(4-phenoxyphenyl)-pyrimidin-4-ylamino)-cyclohexyl)-but-2-en-1-one
“A145”	1-((1S,3S)-3-(6-Amino-5-(4-phenoxyphenyl)-pyrimidin-4-ylamino)-cyclohexyl)-but-2-yn-1-one
“A146”	1-((1S,3R)-3-(6-Amino-5-(4-phenoxyphenyl)-pyrimidin-4-ylamino)-cyclohexyl)-but-2-en-1-one
“A147”	1-((1S,3R)-3-(6-amino-5-(4-phenoxyphenyl)-pyrimidin-4-ylamino)-cyclohexyl)-but-2-yn-1-one
“A148”	(S)-1-(3-((6-amino-5-(4-phenoxyphenyl)pyrimidin-4-yl)amino)pyrrolidin-1-yl)prop-2-en-1-one
“A149”	N-(3-((2-amino-3-(4-(benzyloxy)phenyl)pyridin-4-yl)oxy)phenyl)acrylamide
“A150”	1-(3-((2-amino-5-(4-phenoxyphenyl)pyrimidin-4-yl)amino)piperidin-1-yl)prop-2-en-1-one
“A151”	(E)-N-(3-((2-amino-3-(4-phenoxyphenyl)pyridin-4-yl)oxy)phenyl)-4-(dimethylamino)but-2-enamide
“A152”	(E)-N-(3-((2-amino-3-(4-(benzyloxy)phenyl)pyridin-4-yl)oxy)phenyl)-4-(dimethylamino)but-2-enamide
“A153”	(E)-1-(4-(((6-amino-5-(4-phenoxyphenyl)pyrimidin-4-yl)amino)methyl)piperidin-1-yl)-4-(dimethylamino)but-2-en-1-one
“A154”	N-cis-4-((6-amino-5-(4-(benzyloxy)phenyl)pyrimidin-4-yl)amino)cyclohexyl)acrylamide
“A155”	4-(4-(((1-acryloylpyrrolidin-3-yl)methyl)amino)-6-aminopyrimidin-5-yl)-N-phenylbenzamide
“A156”	1-(3-(((6-amino-5-(4-(benzyloxy)phenyl)pyrimidin-4-yl)amino)methyl)pyrrolidin-1-yl)prop-2-en-1-one
“A157”	4-(4-(((1-acryloylpiperidin-4-yl)methyl)amino)-6-aminopyrimidin-5-yl)-N-phenylbenzamide
“A158”	N-(3-((2-amino-3-(4-phenoxyphenyl)pyridin-4-yl)oxy)-4-fluorophenyl)acrylamide

“A159”	4-(4-((cis-4-acrylamidocyclohexyl)amino)-6-aminopyrimidin-5-yl)-N-phenylbenzamide
“A160”	(E)-1-(3-((6-amino-5-(4-phenoxyphenyl)pyrimidin-4-yl)amino)piperidin-1-yl)-4-(dimethylamino)but-2-en-1-one
“A161”	N-(3-((6-amino-5-(6-phenoxypyridin-3-yl)pyrimidin-4-yl)oxy)-4-fluorophenyl)acrylamide
“A162”	N-(3-((6-amino-5-(4-(pyridin-2-yloxy)phenyl)pyrimidin-4-yl)oxy)phenyl)acrylamide
“A163”	N-(3-((6-amino-5-(3-sulfamoylphenyl)pyrimidin-4-yl)oxy)phenyl)acrylamide
“A164”	N-(3-((6-amino-5-(3-(trifluoromethoxy)phenyl)pyrimidin-4-yl)oxy)phenyl)acrylamide
“A165”	N-(3-((6-amino-5-(6-(2-fluorophenoxy)pyridin-3-yl)pyrimidin-4-yl)oxy)phenyl)acrylamide
“A166”	N-(3-((6-amino-5-(6-(4-fluorophenoxy)pyridin-3-yl)pyrimidin-4-yl)oxy)phenyl)acrylamide
“A167”	N-(6-((5-(4-phenoxyphenyl)pyrimidin-4-yl)amino)pyridin-2-yl)acrylamide
“A168”	1-(4-(((6-amino-5-(6-phenoxypyridin-3-yl)pyrimidin-4-yl)amino)methyl)piperidin-1-yl)prop-2-en-1-one
“A169”	1-(4-(((6-amino-5-(4-(3-(trifluoromethyl)phenoxy)phenyl)pyrimidin-4-yl)amino)methyl)-4-hydroxypiperidin-1-yl)prop-2-en-1-one
“A170”	1-((3S,4S)-4-(((6-amino-5-(4-(3-(trifluoromethyl)phenoxy)phenyl)pyrimidin-4-yl)amino)methyl)-3-hydroxypiperidin-1-yl)prop-2-en-1-one
“A171”	1-(4-(((6-amino-2'-phenoxy-[5,5'-bipyrimidin]-4-yl)amino)methyl)piperidin-1-yl)prop-2-en-1-one
“A172”	N-(3-((6-amino-5-(1-benzyl-1H-pyrazol-4-yl)pyrimidin-4-yl)oxy)phenyl)acrylamide
“A173”	N-((1S,3R)-3-((6-amino-5-(4-phenoxyphenyl)pyrimidin-4-yl)amino)cyclohexyl)acrylamide
“A174”	N-((1R,3S)-3-((6-amino-5-(4-phenoxyphenyl)pyrimidin-4-yl)amino)cyclohexyl)acrylamide

“A175”	N-((1R,3R)-3-((6-amino-5-(4-phenoxyphenyl)pyrimidin-4-yl)amino)cyclohexyl)acrylamide
“A176”	N-((1S,3S)-3-((6-amino-5-(4-phenoxyphenyl)pyrimidin-4-yl)amino)cyclohexyl)acrylamide
“A177”	N-(4-((6-amino-5-(4-phenoxyphenyl)pyrimidin-4-yl)amino)bicyclo[2.1.1]hexan-1-yl)acrylamide
“A178”	(R)-N4-(1-((perfluorophenyl)sulfonyl)pyrrolidin-3-yl)-5-(4-phenoxyphenyl)pyrimidine-4,6-diamine
“A179”	(R)-N4-(1-((perfluorophenyl)sulfonyl)piperidin-3-yl)-5-(4-phenoxyphenyl)pyrimidine-4,6-diamine
“A180”	(R)-1-(3-((6-amino-5-(1-benzyl-1H-pyrazol-4-yl)pyrimidin-4-yl)amino)piperidin-1-yl)prop-2-en-1-one
“A181”	N-(cis-3-((6-amino-5-(4-phenoxyphenyl)pyrimidin-4-yl)amino)cyclopentyl)acrylamide
“A182”	N-(3-(((6-amino-5-(4-phenoxyphenyl)pyrimidin-4-yl)amino)methyl)cyclobutyl)acrylamide
“A183”	N-(3-((6-amino-5-(1-(3,5-difluorobenzyl)-1H-pyrazol-4-yl)pyrimidin-4-yl)oxy)phenyl)acrylamide
“A184”	N-(3-((6-amino-5-(1-(2-fluorobenzyl)-1H-pyrazol-4-yl)pyrimidin-4-yl)oxy)phenyl)acrylamide
“A185”	1-(3-((6-amino-5-(4-phenoxyphenyl)pyrimidin-4-yl)amino)azetidin-1-yl)prop-2-en-1-one
“A186”	N-(5-((6-amino-5-(4-phenoxyphenyl)pyrimidin-4-yl)amino)pyridin-3-yl)acrylamide
“A187”	N-(3-((6-amino-5-(1-(4-fluorobenzyl)-1H-pyrazol-4-yl)pyrimidin-4-yl)oxy)phenyl)acrylamide
“A188”	N-((1R,3S,5R)-3-((6-amino-5-(4-phenoxyphenyl)pyrimidin-4-yl)amino)-5-hydroxycyclohexyl)acrylamide (racemic)
“A189”	N-(5-((6-amino-5-(1-benzyl-1H-pyrazol-4-yl)pyrimidin-4-yl)oxy)pyridin-3-yl)acrylamide
“A190”	N-(3-((6-amino-5-(1-(3-methylbenzyl)-1H-pyrazol-4-yl)pyrimidin-4-yl)oxy)phenyl)acrylamide
“A191”	N-(3-((6-amino-5-(1-(3-chlorobenzyl)-1H-pyrazol-4-yl)pyrimidin-4-yl)oxy)phenyl)acrylamide

“A192”	(R)-1-(2-(((6-amino-5-(1-benzyl-1H-pyrazol-4-yl)pyrimidin-4-yl)oxy)methyl)morpholino)prop-2-en-1-one
“A193”	(S)-1-(2-(((6-amino-5-(1-benzyl-1H-pyrazol-4-yl)pyrimidin-4-yl)oxy)methyl)morpholino)prop-2-en-1-one
“A194”	N-(3-((6-amino-5-(1-(2-cyanobenzyl)-1H-pyrazol-4-yl)pyrimidin-4-yl)oxy)phenyl)acrylamide
“A195”	N-(3-((6-amino-5-(1-(3-(trifluoromethyl)benzyl)-1H-pyrazol-4-yl)pyrimidin-4-yl)oxy)phenyl)acrylamide
“A196”	(R)-1-(3-(((6-amino-5-(1-benzyl-1H-pyrazol-4-yl)pyrimidin-4-yl)oxy)methyl)pyrrolidin-1-yl)prop-2-en-1-one
“A197”	N-(5-((6-amino-5-(4-(4-cyanophenoxy)phenyl)pyrimidin-4-yl)oxy)pyridin-3-yl)acrylamide
“A198”	N-(3-((6-amino-5-(1-(3-methoxybenzyl)-1H-pyrazol-4-yl)pyrimidin-4-yl)oxy)phenyl)acrylamide
“A199”	4-(4-(4-((((3S,4S)-1-acryloyl-3-hydroxypiperidin-4-yl)methyl)amino)-6-aminopyrimidin-5-yl)phenoxy)benzonitrile
“A200”	(R)-4-(4-(4-((4-acryloylmorpholin-2-yl)methoxy)-6-aminopyrimidin-5-yl)phenoxy)benzonitrile
“A201”	(R)-4-(4-(4-((1-acryloylpyrrolidin-3-yl)methoxy)-6-aminopyrimidin-5-yl)phenoxy)benzonitrile
“A202”	4-(4-(4-((2-acryloyl-2-azaspiro[3.3]heptan-6-yl)oxy)-6-aminopyrimidin-5-yl)phenoxy)benzonitrile
“A203”	N-(3-((6-amino-5-(1-(3-cyanobenzyl)-1H-pyrazol-4-yl)pyrimidin-4-yl)oxy)phenyl)acrylamide
“A204”	1-((3S,5S)-3-((6-amino-5-(4-phenoxyphenyl)pyrimidin-4-yl)amino)-5-fluoropiperidin-1-yl)prop-2-en-1-one
“A205”	1-((3R,5R)-3-((6-amino-5-(4-phenoxyphenyl)pyrimidin-4-yl)amino)-5-fluoropiperidin-1-yl)prop-2-en-1-one
“A206”	methyl 3-((4-(4-(3-acrylamidophenoxy)-6-aminopyrimidin-5-yl)-1H-pyrazol-1-yl)methyl)benzoate
“A207”	4-(4-(4-((2-acryloyl-2-azaspiro[3.3]heptan-6-yl)amino)-6-aminopyrimidin-5-yl)phenoxy)benzonitrile
“A208”	4-(4-(4-(((8-acryloyl-8-azabicyclo[3.2.1]octan-3-yl)methyl)amino)-6-aminopyrimidin-5-yl)phenoxy)benzonitrile

“A209”	1-(3-(((6-amino-5-(1-benzyl-1H-pyrazol-4-yl)pyrimidin-4-yl)amino)methyl)-8-azabicyclo[3.2.1]octan-8-yl)prop-2-en-1-one
“A210”	1-((3R,4R)-3-((6-amino-5-(4-phenoxyphenyl)pyrimidin-4-yl)amino)-4-hydroxypiperidin-1-yl)prop-2-en-1-one (racemic)
“A211”	N-(3-((6-amino-5-(1-(3-(methylsulfonyl)benzyl)-1H-pyrazol-4-yl)pyrimidin-4-yl)oxy)phenyl)acrylamide
“A212”	N-(3-((6-amino-5-(1-(3-(dimethylamino)benzyl)-1H-pyrazol-4-yl)pyrimidin-4-yl)oxy)phenyl)acrylamide
“A213”	N-(3-((6-amino-5-(4-(3-cyanophenoxy)phenyl)pyrimidin-4-yl)oxy)phenyl)acrylamide
“A214”	3-(4-(4-(((1-acryloylpiperidin-4-yl)methyl)amino)-6-aminopyrimidin-5-yl)phenoxy)benzonitrile
“A215”	1-((3S,4S)-4-(((6-amino-5-(4-phenoxyphenyl)pyrimidin-4-yl)amino)methyl)-3-hydroxypiperidin-1-yl)but-2-yn-1-one
“A216”	1-acryloyl-4-(((6-amino-5-(4-phenoxyphenyl)pyrimidin-4-yl)amino)methyl)piperidine-4-carboxylic acid
“A217”	(E)-4-(((6-amino-5-(4-phenoxyphenyl)pyrimidin-4-yl)amino)methyl)-1-(4-(dimethylamino)but-2-enoyl)piperidine-4-carboxylic acid
“A218”	(E)-1-(4-(((6-amino-5-(4-phenoxyphenyl)pyrimidin-4-yl)amino)methyl)piperidin-1-yl)-4-(3-fluoroazetidin-1-yl)but-2-en-1-one
“A219”	(E)-1-(4-(((6-amino-5-(4-phenoxyphenyl)pyrimidin-4-yl)amino)methyl)piperidin-1-yl)-4-(3,3-difluoroazetidin-1-yl)but-2-en-1-one
“A220”	(E)-1-(4-(((6-amino-5-(4-phenoxyphenyl)pyrimidin-4-yl)amino)methyl)piperidin-1-yl)-4-(pyrrolidin-1-yl)but-2-en-1-one
“A221”	1-(6-((6-amino-5-(4-(pyridin-3-yloxy)phenyl)pyrimidin-4-yl)oxy)-2-azaspiro[3.3]heptan-2-yl)prop-2-en-1-one
“A222”	(E)-1-(6-((6-amino-5-(4-phenoxyphenyl)pyrimidin-4-yl)oxy)-2-azaspiro[3.3]heptan-2-yl)-4-(3-fluoroazetidin-1-yl)but-2-en-1-one
“A223”	(E)-1-(6-((6-amino-5-(4-phenoxyphenyl)pyrimidin-4-yl)oxy)-2-azaspiro[3.3]heptan-2-yl)-4-(3-fluoroazetidin-1-yl)but-2-en-1-one
“A224”	(E)-N-(1,3-cis-3-((6-amino-5-(4-phenoxyphenyl)pyrimidin-4-yl)amino)cyclobutyl)-4-(dimethylamino)but-2-enamide

“A225”	1-(4-(((6-amino-5-(4-phenoxyphenyl)pyrimidin-4-yl)amino)methyl)-4-fluoropiperidin-1-yl)prop-2-en-1-one
“A226”	(E)-1-(2-((6-amino-5-(4-phenoxyphenyl)pyrimidin-4-yl)amino)-6-azaspiro[3.4]octan-6-yl)-4-(dimethylamino)but-2-en-1-one
“A227”	(E)-1-(4-(((6-amino-5-(4-phenoxyphenyl)pyrimidin-4-yl)amino)methyl)-4-fluoropiperidin-1-yl)-4-(dimethylamino)but-2-en-1-one
“A228”	(E)-N-(1,3-trans-3-((6-amino-5-(4-phenoxyphenyl)pyrimidin-4-yl)amino)cyclobutyl)-4-(dimethylamino)but-2-enamide
“A229”	N-(1,3-cis-3-((6-amino-5-(1-benzyl-1H-pyrazol-4-yl)pyrimidin-4-yl)amino)cyclobutyl)acrylamide
“A230”	(E)-N-(1,3-cis-3-((6-amino-5-(1-benzyl-1H-pyrazol-4-yl)pyrimidin-4-yl)amino)cyclobutyl)-4-(dimethylamino)but-2-enamide
“A231”	(E)-1-(4-(((6-amino-5-(4-phenoxyphenyl)pyrimidin-4-yl)amino)methyl)piperidin-1-yl)-3-phenylprop-2-en-1-one
“A232”	1-((3S,4S)-4-(((6-amino-5-(4-phenoxyphenyl)pyrimidin-4-yl)amino)methyl)-3-hydroxypiperidin-1-yl)-3-(dimethylamino)propan-1-one
“A233”	1-((3S,4S)-4-(((6-amino-5-(4-phenoxyphenyl)pyrimidin-4-yl)amino)methyl)-3-hydroxypiperidin-1-yl)-3-(piperidin-1-yl)propan-1-one
“A234”	1-((3S,4S)-4-(((6-amino-5-(4-phenoxyphenyl)pyrimidin-4-yl)amino)methyl)-3-hydroxypiperidin-1-yl)-3-morpholinopropan-1-one
“A235”	1-(4-(((6-amino-5-(4-phenoxyphenyl)pyrimidin-4-yl)amino)methyl)-4-fluoropiperidin-1-yl)-3-(piperidin-1-yl)propan-1-one
“A236”	(E)-N-(1,3-cis-3-((6-amino-5-(4-(3-(trifluoromethyl)phenoxy)phenyl)pyrimidin-4-yl)amino)cyclobutyl)-4-(dimethylamino)but-2-enamide
“A237”	N-(1,3-trans-3-((6-amino-5-(4-(3-(trifluoromethyl)phenoxy)phenyl)pyrimidin-4-yl)amino)cyclobutyl)acrylamide
“A238”	N-(1,3-cis-3-((6-amino-5-(4-(3-(trifluoromethyl)phenoxy)phenyl)pyrimidin-4-yl)amino)cyclobutyl)acrylamide

“A239”	1-acryloyl-4-(((6-amino-5-(4-(3-(trifluoromethyl)phenoxy)phenyl)pyrimidin-4-yl)amino)methyl)piperidine-4-carboxylic acid
“A240”	N-(3-((6-amino-5-(4-phenoxyphenyl)pyrimidin-4-yl)oxy)-2-fluorophenyl)acrylamide
“A241”	N-(3-(4-amino-6-((4-phenoxyphenyl)amino)pyrimidin-5-yl)phenyl)acrylamide
“A242”	N-(3-((6-amino-5-(4-phenoxyphenyl)pyrimidin-4-yl)oxy)phenyl)acrylamide
“A243”	N-(3-(2-amino-4-(4-phenoxyphenoxy)pyridin-3-yl)phenyl)acrylamide
“A244”	N-(3-((2-amino-3-(4-phenoxyphenyl)pyridin-4-yl)oxy)phenyl)acrylamide
“A245”	N-(3-(4-amino-6-(4-phenoxyphenoxy)pyrimidin-5-yl)phenyl)acrylamide
“A246”	N-(3-((6-amino-5-(4-phenoxyphenyl)pyrimidin-4-yl)oxy)-4-fluorophenyl)acrylamide
“A247”	(R)-1-(3-((6-amino-5-(4-phenoxyphenyl)pyrimidin-4-yl)amino)piperidin-1-yl)prop-2-en-1-one
“A248”	(E)-N-(3-(4-amino-6-(4-phenoxyphenoxy)pyrimidin-5-yl)phenyl)-4-(dimethylamino)but-2-enamide
“A249”	N-(3-((6-amino-5-(4-(benzyloxy)phenyl)pyrimidin-4-yl)oxy)phenyl)acrylamide
“A250”	1-(4-(((6-amino-5-(4-phenoxyphenyl)pyrimidin-4-yl)amino)methyl)piperidin-1-yl)prop-2-en-1-one
“A251”	N-(5-((6-amino-5-(4-phenoxyphenyl)pyrimidin-4-yl)oxy)-2,4-difluorophenyl)acrylamide
“A252”	(E)-N-(3-((6-amino-5-(4-phenoxyphenyl)pyrimidin-4-yl)oxy)phenyl)-4-(dimethylamino)but-2-enamide
“A253”	1-(3-((6-amino-5-(4-phenoxyphenyl)pyrimidin-4-yl)amino)piperidin-1-yl)prop-2-en-1-one
“A254”	N-(3-((6-amino-5-(4-((2-methoxybenzyl)oxy)phenyl)pyrimidin-4-yl)oxy)phenyl)acrylamide
“A255”	N-(3-((5-(4-phenoxyphenyl)pyrimidin-4-yl)oxy)phenyl)acrylamide
“A256”	N-(3-((6-amino-5-(4-(benzyloxy)-3-methoxyphenyl)pyrimidin-4-yl)oxy)phenyl)acrylamide

“A257”	N-(3-((6-amino-5-(4-(benzyloxy)-2,3-difluorophenyl)pyrimidin-4-yl)oxy)phenyl)acrylamide
“A258”	4-(4-(3-acrylamidophenoxy)-6-aminopyrimidin-5-yl)-N-phenylbenzamide
“A259”	N-(3-((6-amino-5-(6-(benzyloxy)pyridin-3-yl)pyrimidin-4-yl)oxy)phenyl)acrylamide
“A260”	N-(3-((6-amino-5-(4-((3-fluorobenzyl)oxy)phenyl)pyrimidin-4-yl)oxy)phenyl)acrylamide
“A261”	N-(3-((6-amino-2'-(benzyloxy)-[5,5'-bipyrimidin]-4-yl)oxy)phenyl)acrylamide
“A262”	1-(3-(((6-amino-5-(4-phenoxyphenyl)pyrimidin-4-yl)amino)methyl)pyrrolidin-1-yl)prop-2-en-1-one
“A263”	1-(4-(4-amino-6-(4-phenoxyphenoxy)pyrimidin-5-yl)-5,6-dihydropyridin-1(2H)-yl)prop-2-en-1-one
“A264”	N-(3-((6-amino-5-(4-((4-methoxybenzyl)oxy)phenyl)pyrimidin-4-yl)oxy)phenyl)acrylamide
“A265”	(E)-N-(3-((6-amino-5-(4-phenoxyphenyl)pyrimidin-4-yl)oxy)phenyl)-4-morpholinobut-2-enamide
“A266”	N-((1s,4s)-4-((6-amino-5-(4-phenoxyphenyl)pyrimidin-4-yl)amino)cyclohexyl)acrylamide
“A267”	N-(3-(4-((4-phenoxyphenyl)amino)pyridin-3-yl)phenyl)acrylamide
“A268”	N-(3-((6-amino-5-(6-phenoxypyridin-3-yl)pyrimidin-4-yl)oxy)phenyl)acrylamide
“A269”	1-(3-((6-amino-5-(4-(benzyloxy)phenyl)pyrimidin-4-yl)amino)piperidin-1-yl)prop-2-en-1-one
“A270”	N-(3-((3-(4-phenoxyphenyl)pyridin-4-yl)oxy)phenyl)acrylamide
“A271”	N-(3-((2-amino-5-(4-phenoxyphenyl)pyrimidin-4-yl)oxy)phenyl)acrylamide
“A272”	3-(3-acrylamidophenyl)-4-(4-phenoxyphenoxy)picolinamide
“A273”	1-(3-(4-amino-6-((4-phenoxyphenyl)amino)pyrimidin-5-yl)-5,6-dihydropyridin-1(2H)-yl)prop-2-en-1-one
“A274”	(E)-N-(3-(4-amino-6-(4-phenoxyphenoxy)pyrimidin-5-yl)phenyl)-4-morpholinobut-2-enamide

“A275”	(S)-1-(3-((6-amino-5-(4-phenoxyphenyl)pyrimidin-4-yl)amino)piperidin-1-yl)prop-2-en-1-one
“A276”	N-((1r,4r)-4-((6-amino-5-(4-phenoxyphenyl)pyrimidin-4-yl)amino)cyclohexyl)acrylamide
“A277”	N-(3-((6-amino-5-(4-fluoro-3-methoxyphenyl)pyrimidin-4-yl)oxy)phenyl)acrylamide
“A278”	N-(3-((6-amino-5-(4-(2-hydroxypropan-2-yl)phenyl)pyrimidin-4-yl)oxy)phenyl)acrylamide
“A279”	1-(3-(4-amino-6-(4-phenoxyphenoxy)pyrimidin-5-yl)-5,6-dihydropyridin-1(2H)-yl)prop-2-en-1-one
“A280”	N-(4-((6-amino-5-(4-phenoxyphenyl)pyrimidin-4-yl)oxy)phenyl)acrylamide
“A281”	N-(4-(4-(4-phenoxyphenoxy)pyridin-3-yl)phenyl)acrylamide
“A282”	(E)-4-(dimethylamino)-N-(3-(4-(4-phenoxyphenoxy)pyridin-3-yl)phenyl)but-2-enamide
“A283”	N-(3-(4-((4-phenoxyphenyl)amino)pyrimidin-5-yl)phenyl)acrylamide
“A284”	1-(3-((5-(4-phenoxyphenyl)pyrimidin-4-yl)amino)piperidin-1-yl)prop-2-en-1-one
“A285”	N-(3-((6-amino-5-(4-(pyrrolidine-1-carbonyl)phenyl)pyrimidin-4-yl)oxy)phenyl)acrylamide
“A286”	1-(3-(((6-amino-5-(4-phenoxyphenyl)pyrimidin-4-yl)amino)methyl)piperidin-1-yl)prop-2-en-1-one
“A287”	N-(4-(4-(4-phenoxyphenoxy)pyridin-3-yl)benzyl)acrylamide
“A288”	1-(4'-(4-phenoxyphenoxy)-5,6-dihydro-[3,3'-bipyridin]-1(2H)-yl)prop-2-en-1-one
“A289”	N-(3-((6-amino-5-(4-isopropoxyphenyl)pyrimidin-4-yl)oxy)phenyl)acrylamide
“A290”	(E)-N-(4-((6-amino-5-(4-phenoxyphenyl)pyrimidin-4-yl)oxy)phenyl)-4-(dimethylamino)but-2-enamide
“A291”	N-(3-((6-amino-5-(5-methoxypyridin-3-yl)pyrimidin-4-yl)oxy)phenyl)acrylamide
“A292”	1-(4-(((6-amino-5-(4-(benzyloxy)phenyl)pyrimidin-4-yl)amino)methyl)piperidin-1-yl)prop-2-en-1-one

“A293”	(E)-4-morpholino-N-(3-(4-(4-phenoxyphenoxy)pyridin-3-yl)phenyl)but-2-enamide
“A294”	N-(3-((6-amino-5-(4-(benzyloxy)-2,6-difluorophenyl)pyrimidin-4-yl)oxy)phenyl)acrylamide
“A295”	(E)-N-(3-((6-amino-5-(4-phenoxyphenyl)pyrimidin-4-yl)oxy)phenyl)-4-(4-(5-((4S)-2-oxohexahydro-1H-thieno[3,4-d]imidazol-4-yl)pentanoyl)piperazin-1-yl)but-2-enamide
“A296”	N-(3-(4-(4-phenoxyphenoxy)pyridin-3-yl)phenyl)but-2-ynamide
“A297”	N-(4-((3-(4-phenoxyphenyl)pyridin-4-yl)oxy)phenyl)acrylamide
“A298”	N-(1-(6-amino-5-(4-phenoxyphenyl)pyrimidin-4-yl)piperidin-3-yl)acrylamide
“A299”	1-(4-((6-amino-5-(4-phenoxyphenyl)pyrimidin-4-yl)amino)piperidin-1-yl)prop-2-en-1-one
“A300”	3-(3-aminophenyl)-4-(4-phenoxyphenoxy)pyridin-2-amine
“A301”	(E)-N-(3-(4-amino-6-(4-phenoxyphenoxy)pyrimidin-5-yl)phenyl)-4-(3,3-difluoropiperidin-1-yl)but-2-enamide
“A302”	N-(3-(4-(4-phenoxyphenoxy)pyridin-3-yl)benzyl)acrylamide
“A303”	6-(4-aminophenoxy)-5-(4-phenoxyphenyl)pyrimidin-4-amine
“A304”	N-(3-(4-(4-phenoxyphenoxy)pyridin-3-yl)benzyl)but-2-ynamide
“A305”	6-(3-aminophenoxy)-5-(4-phenoxyphenyl)pyrimidin-4-amine
“A306”	N-(3-(2-amino-4-(4-phenoxyphenoxy)pyrimidin-5-yl)phenyl)acrylamide
“A307”	(E)-N-(3-(4-(4-phenoxyphenoxy)pyridin-3-yl)phenyl)but-2-enamide
“A308”	N-(4-((6-amino-5-(4-phenoxyphenyl)pyrimidin-4-yl)oxy)phenyl)propionamide
“A309”	N-((1-(6-amino-5-(4-phenoxyphenyl)pyrimidin-4-yl)piperidin-3-yl)methyl)acrylamide
“A310”	N-(3-(2-amino-4-(4-phenoxyphenoxy)pyridin-3-yl)phenyl)propionamide
“A311”	(R)-N-(3-(4-amino-6-((1-phenylethyl)amino)pyrimidin-5-yl)phenyl)acrylamide
“A312”	3-(4-(4-phenoxyphenoxy)pyridin-3-yl)aniline
“A313”	4-(3-aminophenoxy)-3-(4-phenoxyphenyl)pyridin-2-amine
“A314”	4-(4-(4-phenoxyphenoxy)pyridin-3-yl)aniline
“A315”	(4-(4-(4-phenoxyphenoxy)pyridin-3-yl)phenyl)methanamine
“A316”	(3-(4-(4-phenoxyphenoxy)pyridin-3-yl)phenyl)methanamine

“A317”	5-(3-aminophenyl)-6-(4-phenoxyphenoxy)pyrimidin-4-amine
“A318”	N-(3-((3-(4-phenoxyphenyl)pyridin-4-yl)oxy)phenyl)propionamide
“A319”	N-(3-(4-(4-phenoxyphenoxy)pyridin-3-yl)phenyl)propionamide
“A320”	N-(4-(4-(4-phenoxyphenoxy)pyridin-3-yl)phenyl)propionamide
“A321”	N-(4-((3-(4-phenoxyphenyl)pyridin-4-yl)oxy)phenyl)propionamide
“A322”	N-(3-(4-(4-phenoxyphenoxy)pyridin-3-yl)phenyl)methacrylamide
“A323”	N-(3-(4-(4-phenoxyphenoxy)pyridin-3-yl)benzyl)propionamide
“A324”	N-(4-(4-(4-phenoxyphenoxy)pyridin-3-yl)benzyl)propionamide
“A325”	N-(3-(4-amino-6-(4-phenoxyphenoxy)pyrimidin-5-yl)phenyl)propionamide
“A326”	N-(3-((6-amino-5-(4-phenoxyphenyl)pyrimidin-4-yl)oxy)phenyl)propionamide
“A327”	(E)-N-(3-(4-(4-phenoxyphenoxy)pyridin-3-yl)benzyl)but-2-enamide
“A328”	3-(4-phenoxyphenyl)-4-(3-propionamidophenoxy)picolinamide
“A329”	N-(3-((6-amino-5-(4-phenoxyphenyl)pyrimidin-4-yl)oxy)phenyl)-1-cyanocyclopropanecarboxamide
“A330”	N-(3-(4-amino-6-(4-phenoxyphenoxy)pyrimidin-5-yl)phenyl)-1-cyanocyclopropanecarboxamide
“A331”	(E)-3-(7-((6-amino-5-(4-phenoxyphenyl)pyrimidin-4-yl)oxy)naphthalen-2-yl)-N,N-dimethylacrylamide
“A332”	1-(4-(1-((6-amino-5-(4-phenoxyphenyl)pyrimidin-4-yl)amino)ethyl)piperidin-1-yl)prop-2-en-1-one
“A333”	1-(4-(((6-amino-5-(4-phenoxyphenyl)pyrimidin-4-yl)amino)methyl)piperidin-1-yl)propan-1-one
“A334”	1-(4-(((5-(4-phenoxyphenyl)pyrimidin-4-yl)amino)methyl)piperidin-1-yl)prop-2-en-1-one
“A335”	1-(4-(((6-amino-5-(4-(pyridin-2-yloxy)phenyl)pyrimidin-4-yl)amino)methyl)piperidin-1-yl)prop-2-en-1-one
“A336”	1-(4-(((6-amino-5-(4-phenoxyphenyl)pyrimidin-4-yl)amino)methyl)piperidin-1-yl)but-2-yn-1-one
“A337”	N4-((1-(6-chloropyridin-2-yl)piperidin-4-yl)methyl)-5-(4-phenoxyphenyl)pyrimidine-4,6-diamine
“A338”	1-(4-(((6-amino-5-(4-phenoxyphenyl)pyrimidin-4-yl)oxy)methyl)piperidin-1-yl)prop-2-en-1-one

“A339”	N-(3-((6-amino-5-(4-(benzyloxy)-2,5-difluorophenyl)pyrimidin-4-yl)oxy)phenyl)acrylamide
“A340”	N-(3-((2-amino-3-(4-phenoxyphenyl)pyridin-4-yl)oxy)phenyl)but-2-ynamide
“A341”	(R)-1-(3-((6-amino-5-(4-phenoxyphenyl)pyrimidin-4-yl)amino)pyrrolidin-1-yl)but-2-yn-1-one
“A342”	N-{3-[6-Amino-5-(4-phenoxy-phenyl)-pyrimidin-4-yloxy]-phenyl}-2-chloroacetamide
“A343”	N-(3-{6-Amino-5-[4-(2-fluoro-benzyloxy)-phenyl]-pyrimidin-4-yloxy}-phenyl)-acrylamide
“A344”	N-(3-{6-Amino-5-[4-(4-fluoro-benzyloxy)-phenyl]-pyrimidin-4-yloxy}-phenyl)-acrylamide
“A345”	N-(3-{6-Amino-5-[4-(3-fluoro-benzyloxy)-phenyl]-pyrimidin-4-yloxy}-phenyl)-2-chloro-acetamide
“A346”	N-{3-[6-Amino-5-(4-benzyloxy-phenyl)-pyrimidin-4-yloxy]-phenyl}-propionamide
“A347”	N-{3-[6-Amino-5-(4-benzyloxy-phenyl)-pyrimidin-4-yloxy]-phenyl}-2-chloro-acetamide
“A348”	N-{3-[6-Amino-5-(4-benzyloxy-3-fluoro-phenyl)-pyrimidin-4-yloxy]-phenyl}-acrylamide
“A349”	N-{3-[6-Amino-5-(4-benzyloxy-2-fluoro-phenyl)-pyrimidin-4-yloxy]-phenyl}-acrylamide
“A350”	N-{3-(6-Amino-5-(4-benzyloxy-2-fluoro-phenyl)-pyrimidin-4-yloxy} -phenyl)-2-chloro-acetamide
“A351”	N-{3-[6-Amino-5-(4-benzyloxy-3-fluoro-phenyl)-pyrimidin-4-yloxy]-phenyl}-2-chloro-acetamide
“A352”	N-{4-[4-(3-Acryloylamino-phenoxy)-6-amino-pyrimidin-5-yl]-phenyl}-benzamide

or a pharmaceutically acceptable salt, tautomer or stereoisomer thereof.