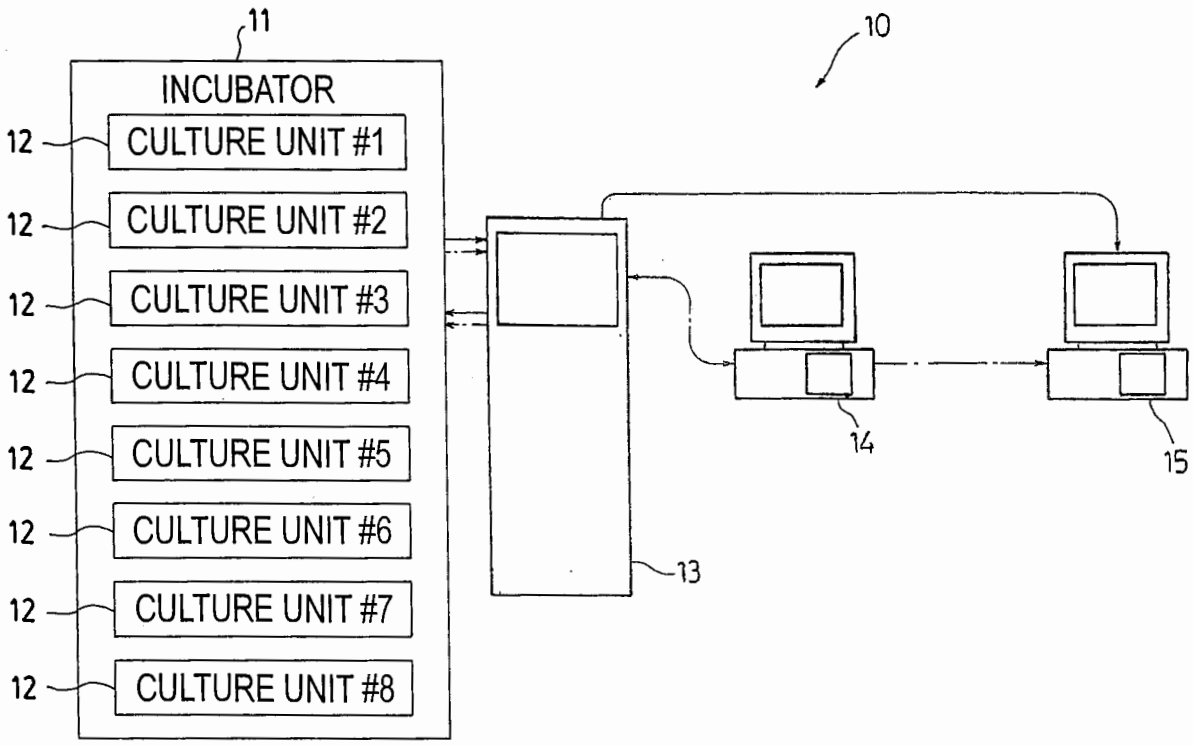
11
INCUBATOR
12
CULTURE UNIT #1
12
CULTURE UNIT #2
12
CULTURE UNIT #3
12
CULTURE UNIT #4
12
CULTURE UNIT #5
12
CULTURE UNIT #6
12
CULTURE UNIT #7
12
CULTURE UNIT #8
10
13
14
15

FIG.1

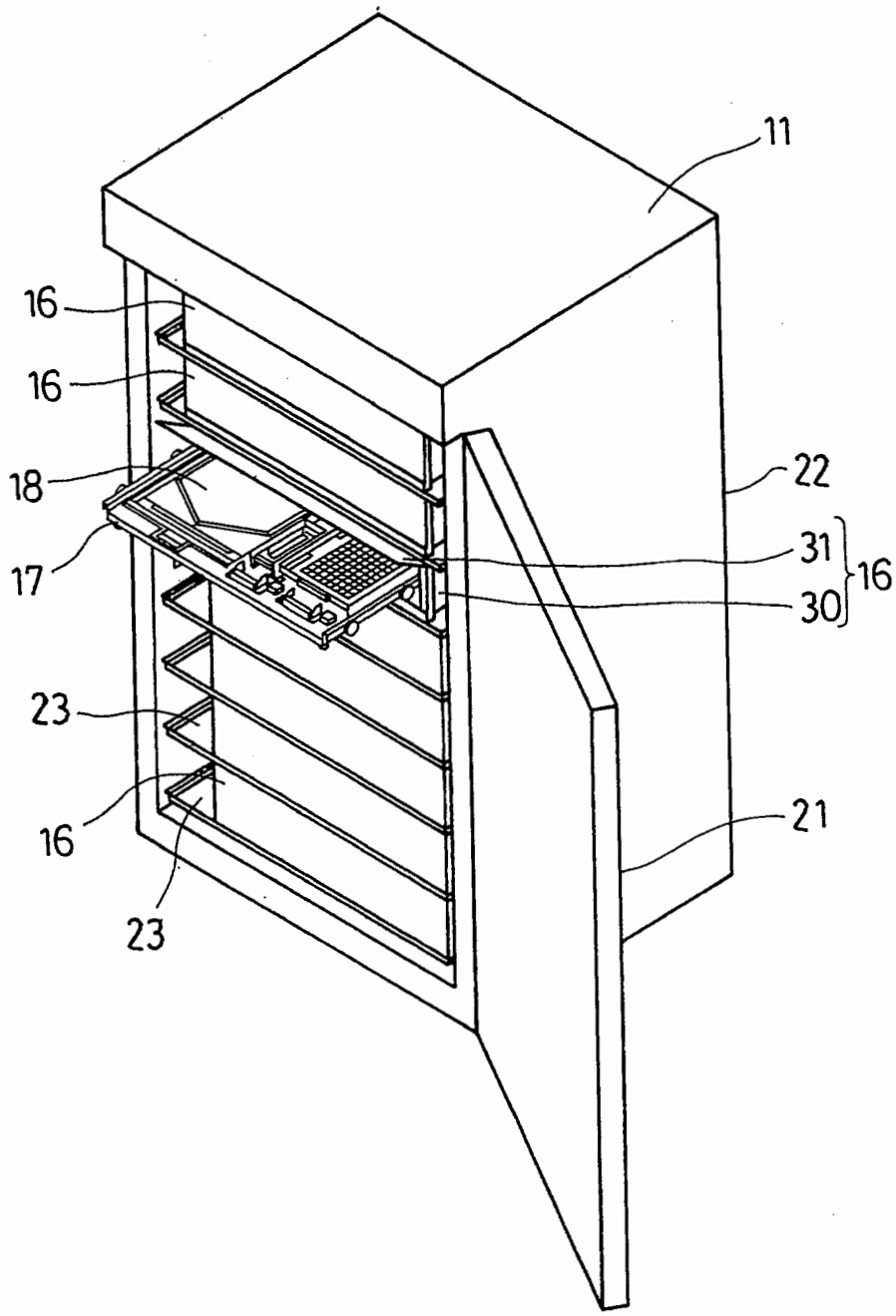


FIG.2

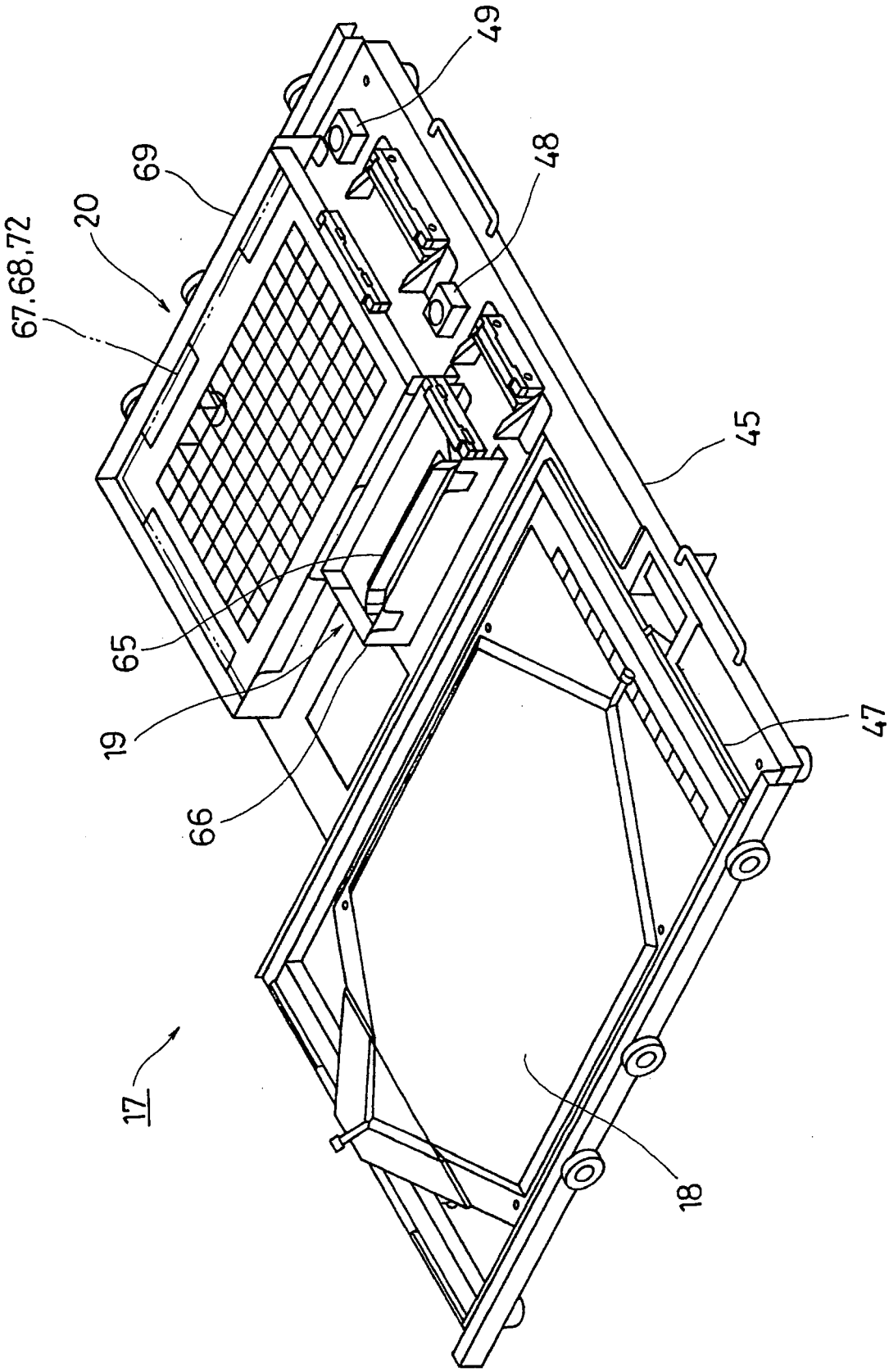


FIG.3

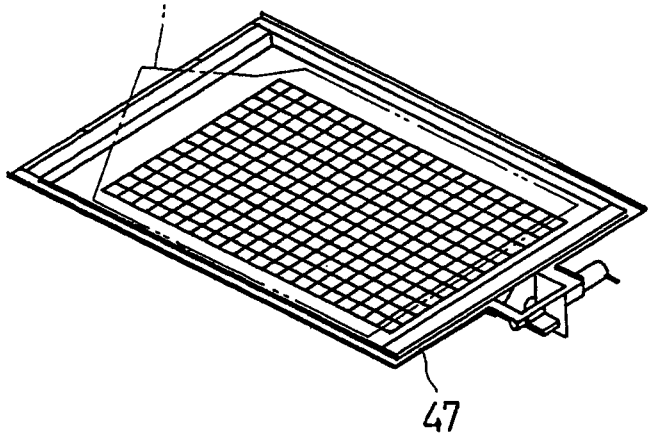


FIG.4A

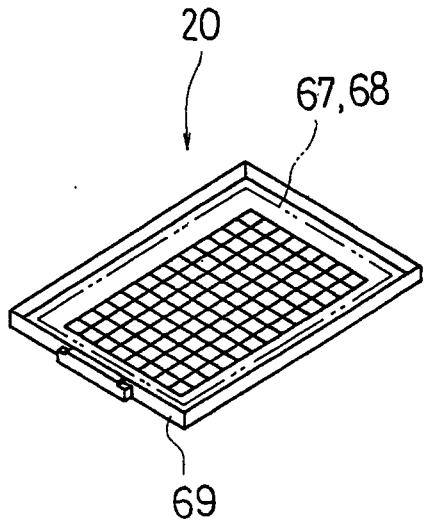


FIG.4B

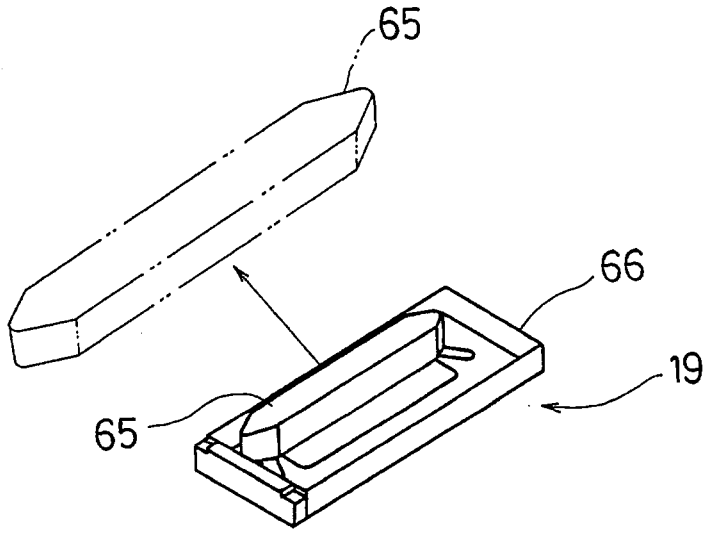


FIG.4C

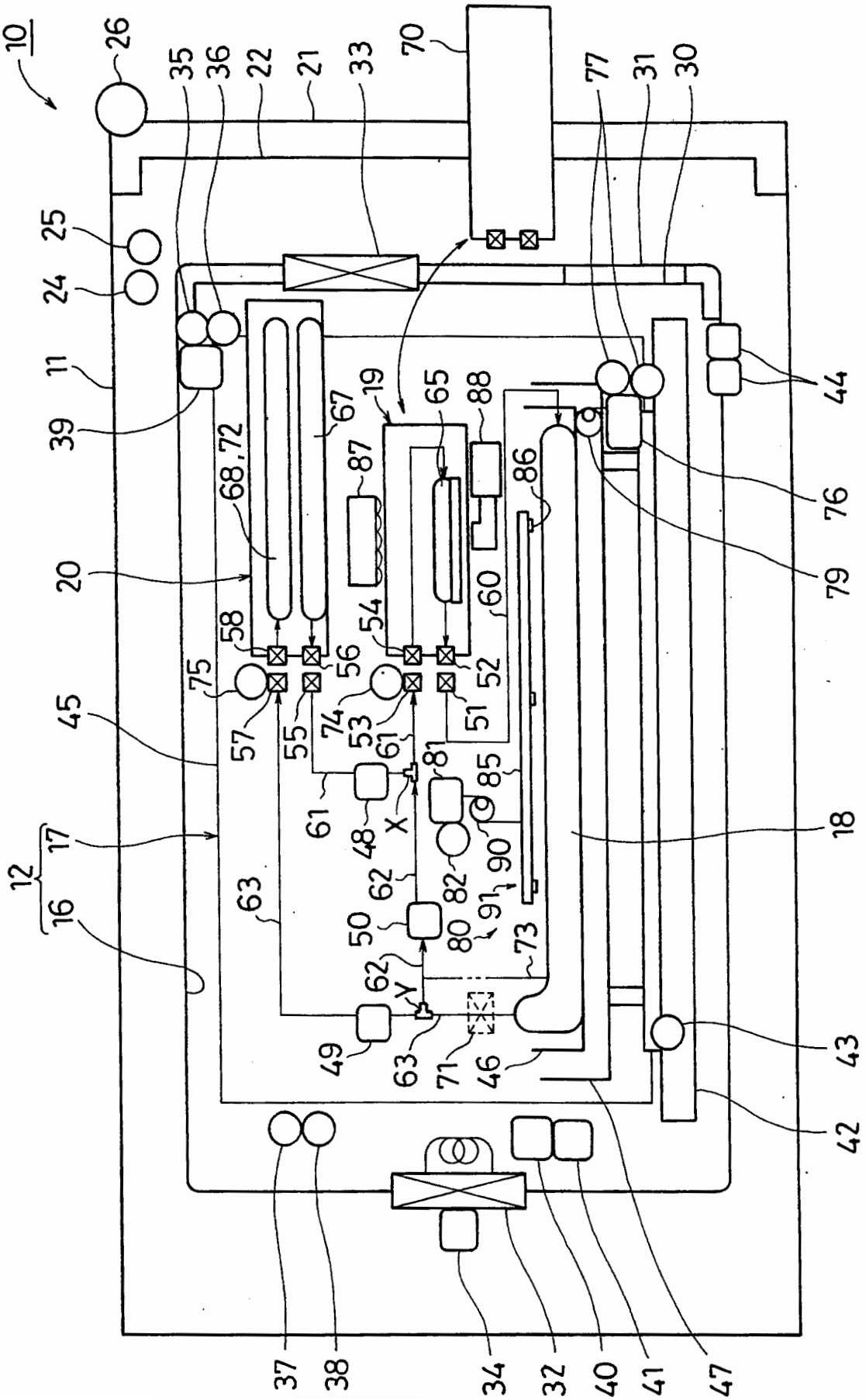
10
26
35
36
22
21
33
70
77
31
30
25
24
11
39
19
65
88
67
68,72
87
86
44
76
79
20
60
58
54
56
52
75
57
55
74
53
51
45
61
81
85
48
X
90
18
12
17
16
62
82
91
63
50
80
73
Y
49
71
46
43
42
37
38
34
32
40
41
47

FIG.5

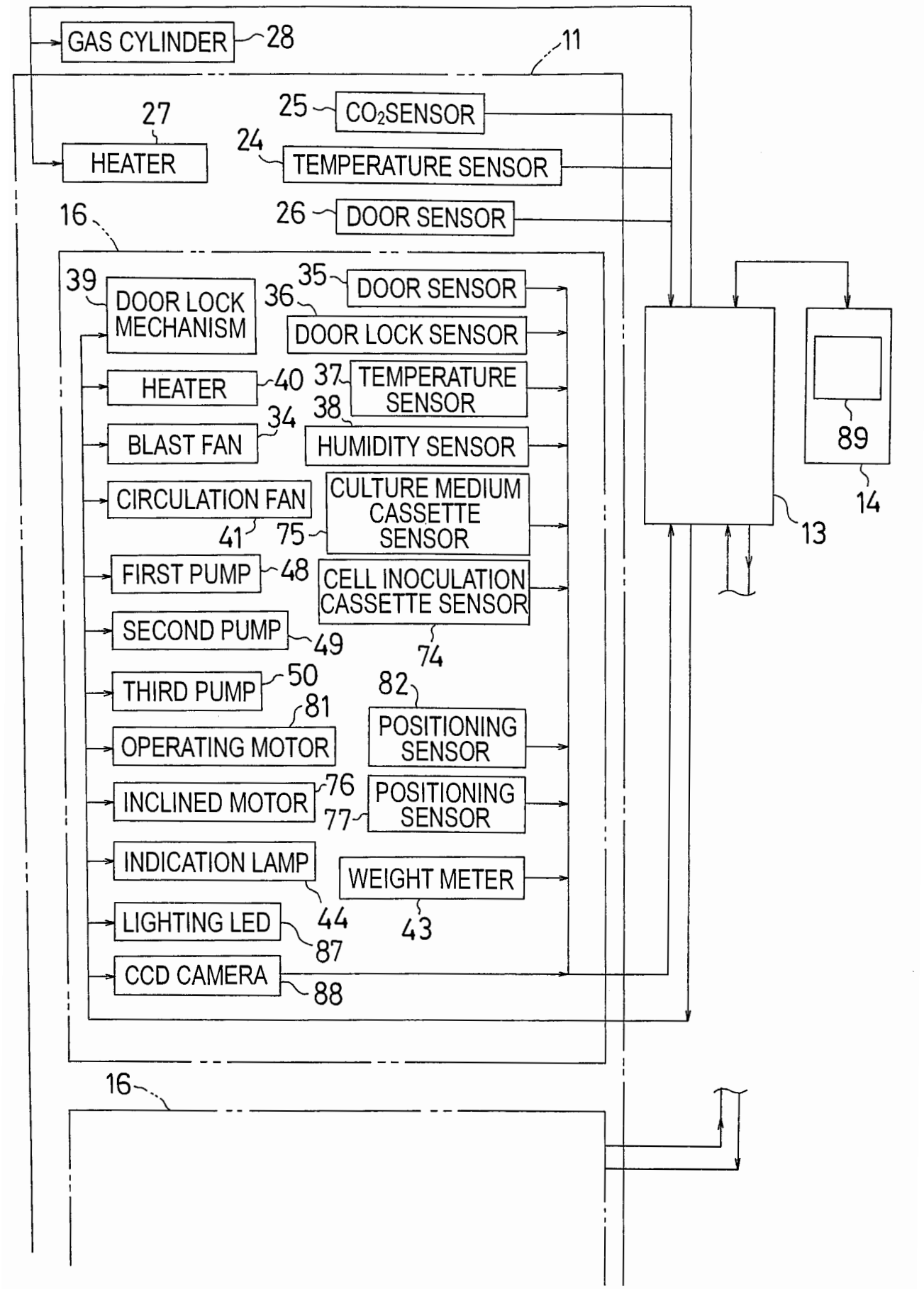
GAS CYLINDER
28
11
27
HEATER
25
$CO_2$SENSOR
24
TEMPERATURE SENSOR
26
DOOR SENSOR
16
39
DOOR LOCK MECHANISM
35
DOOR SENSOR
36
DOOR LOCK SENSOR
HEATER
40
37
TEMPERATURE SENSOR
38
34
BLAST FAN
HUMIDITY SENSOR
CIRCULATION FAN
41
75
CULTURE MEDIUM CASSETTE SENSOR
FIRST PUMP
48
CELL INOCULATION CASSETTE SENSOR
74
SECOND PUMP
49
THIRD PUMP
50
82
81
OPERATING MOTOR
POSITIONING SENSOR
INCLINED MOTOR
76
77
POSITIONING SENSOR
INDICATION LAMP
WEIGHT METER
44
43
LIGHTING LED
87
CCD CAMERA
88
89
14
13
16

FIG.6

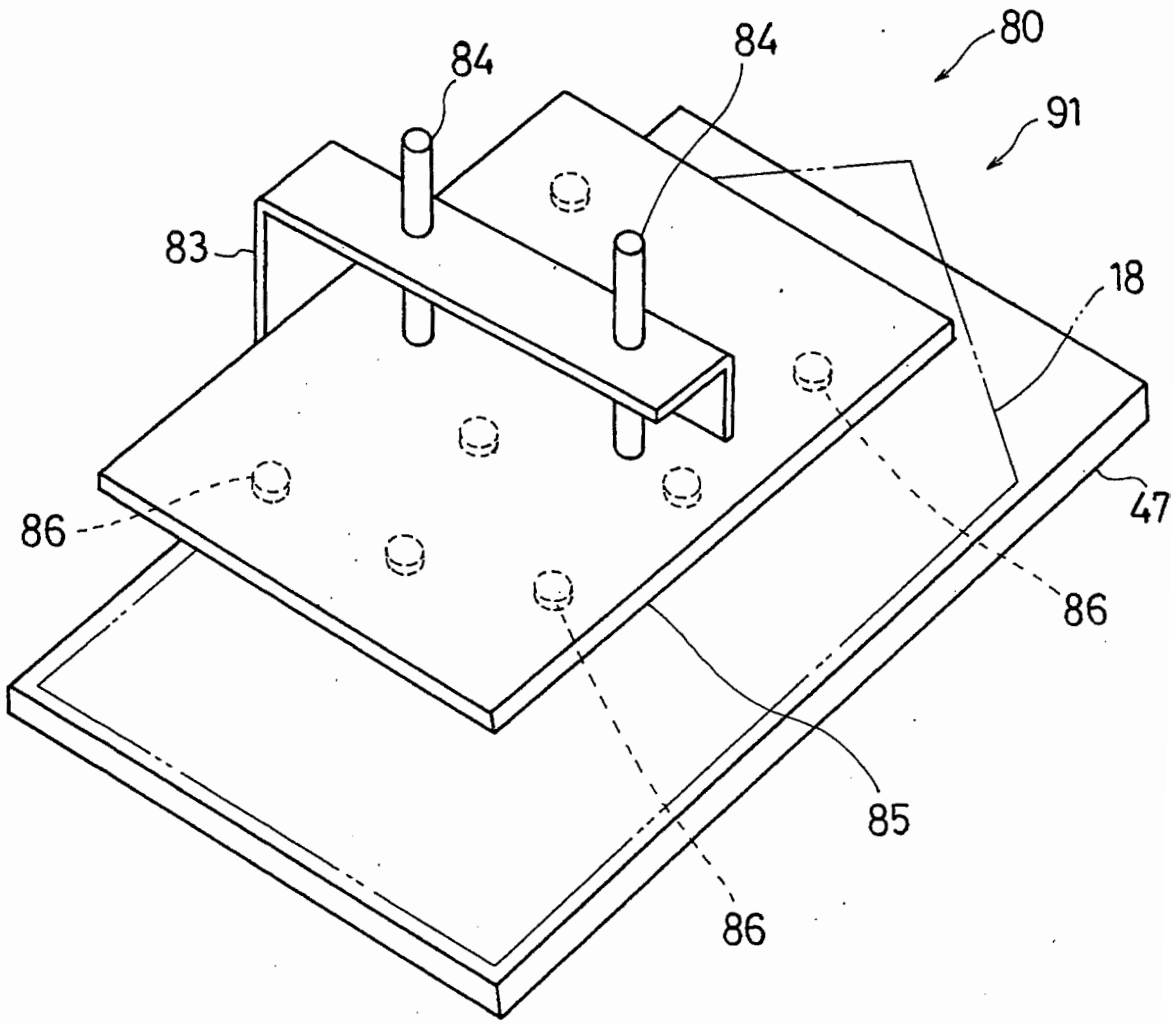


FIG.7A

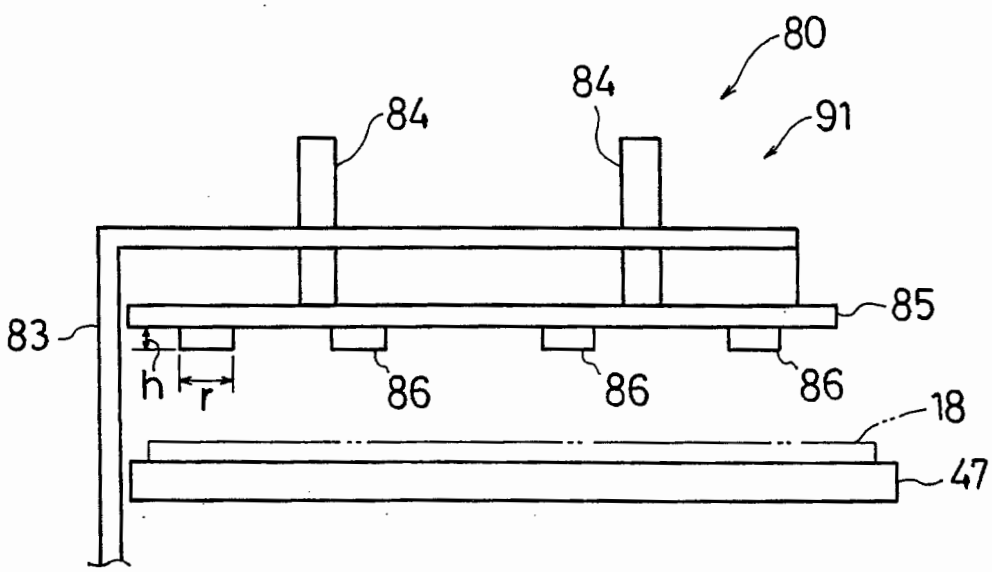


FIG.7B

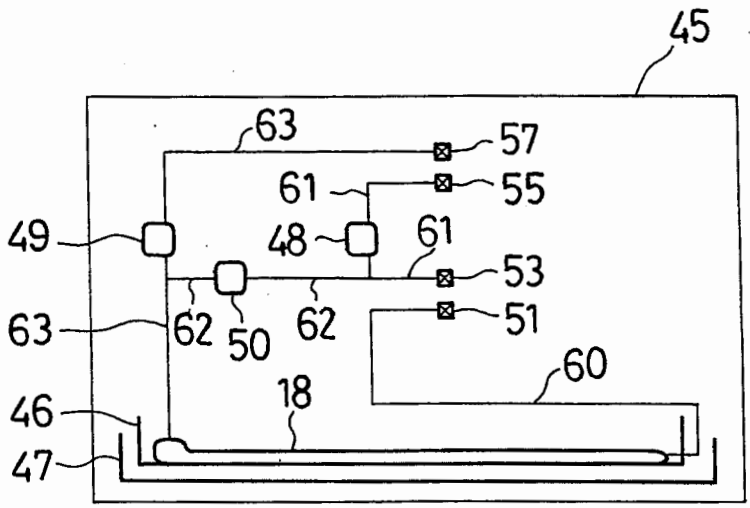
45
63
57
61
55
49
48
61
53
63
62
50
62
51
60
18
46
47

FIG.8A

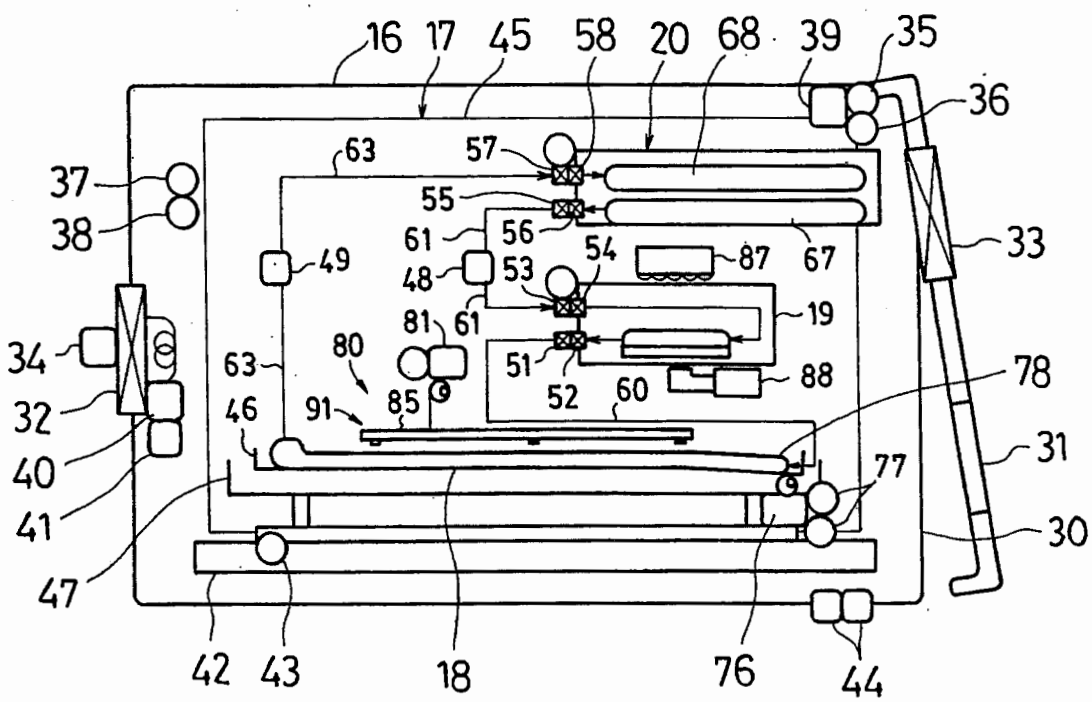
16
17
45
58
20
68
39
35
36
37
38
63
57
55
61
56
54
87
67
33
49
48
53
19
81
61
34
63
80
51
88
78
32
46
91
85
52
60
31
40
77
41
30
47
42
43
18
76
44

FIG.8B

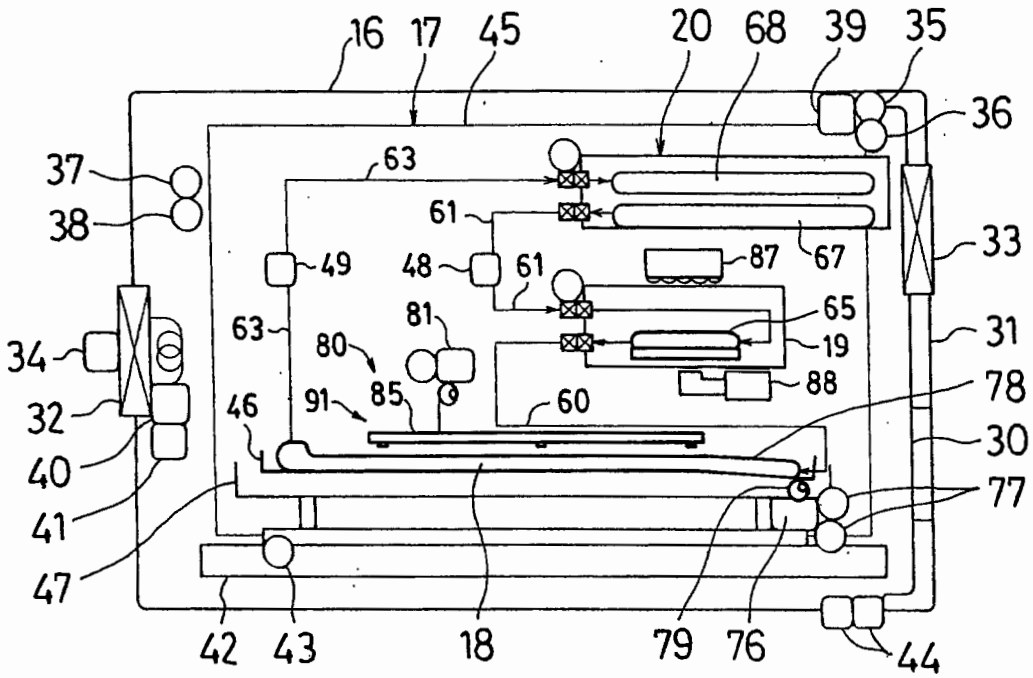
16
17
45
20
68
39
35
36
37
38
63
61
33
49
48
61
87
67
65
81
19
31
34
63
80
88
32
91
85
60
78
46
30
40
41
77
47
42
43
18
79
76
44

FIG.9A

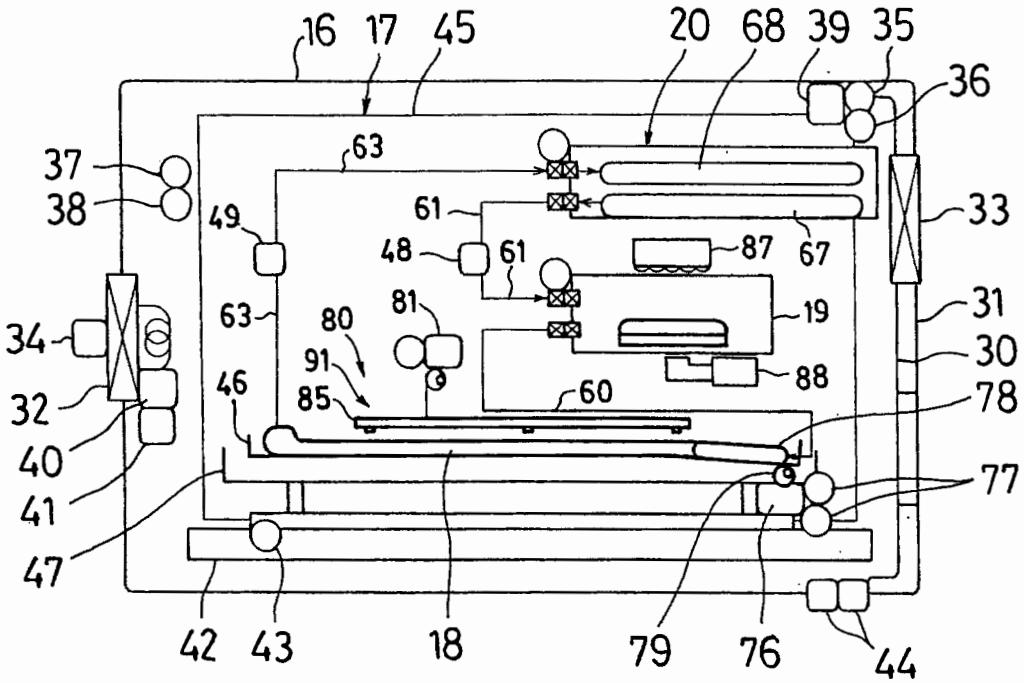
16
17
45
20
68
39
35
36
37
38
63
61
33
49
48
61
87
67
81
19
31
34
63
80
30
91
88
32
46
85
60
78
40
41
77
47
42
43
18
79
76
44

FIG.9B

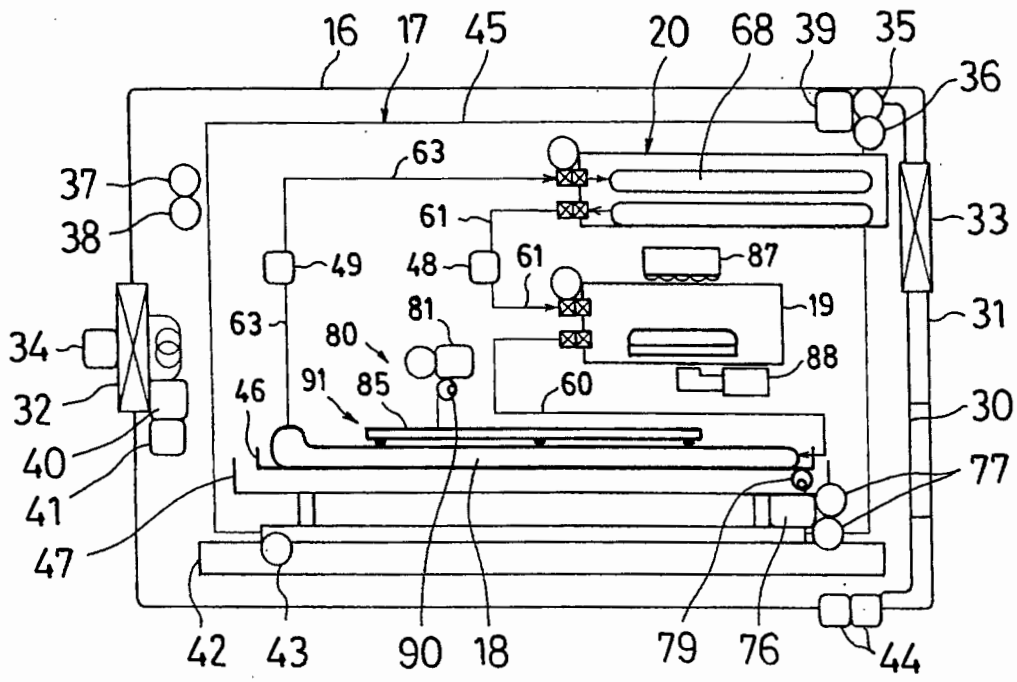


FIG.10A

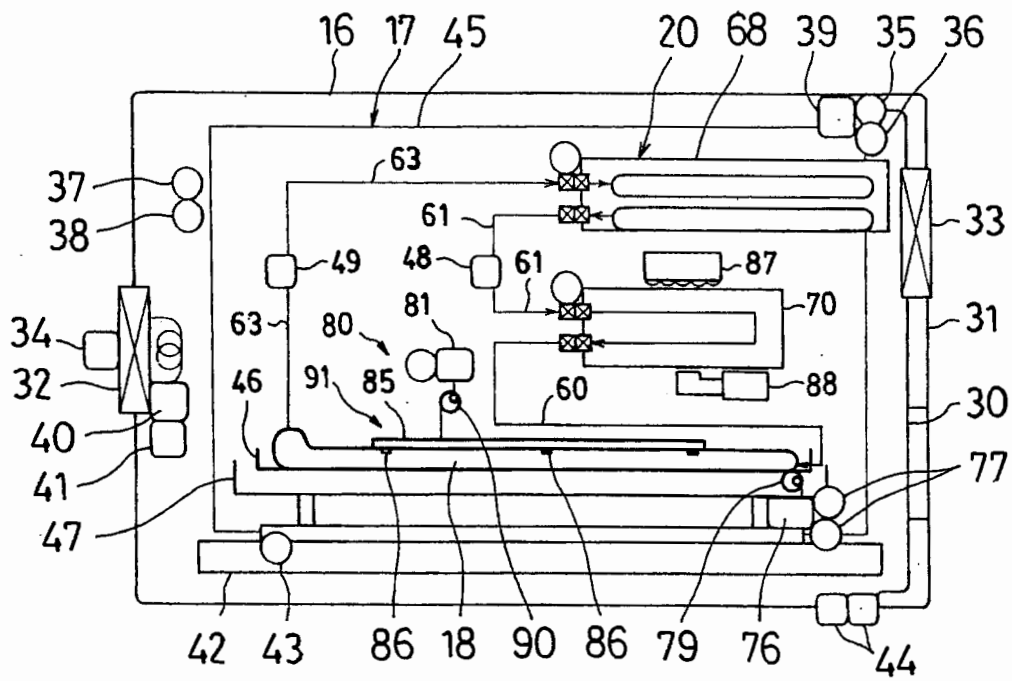


FIG.10B

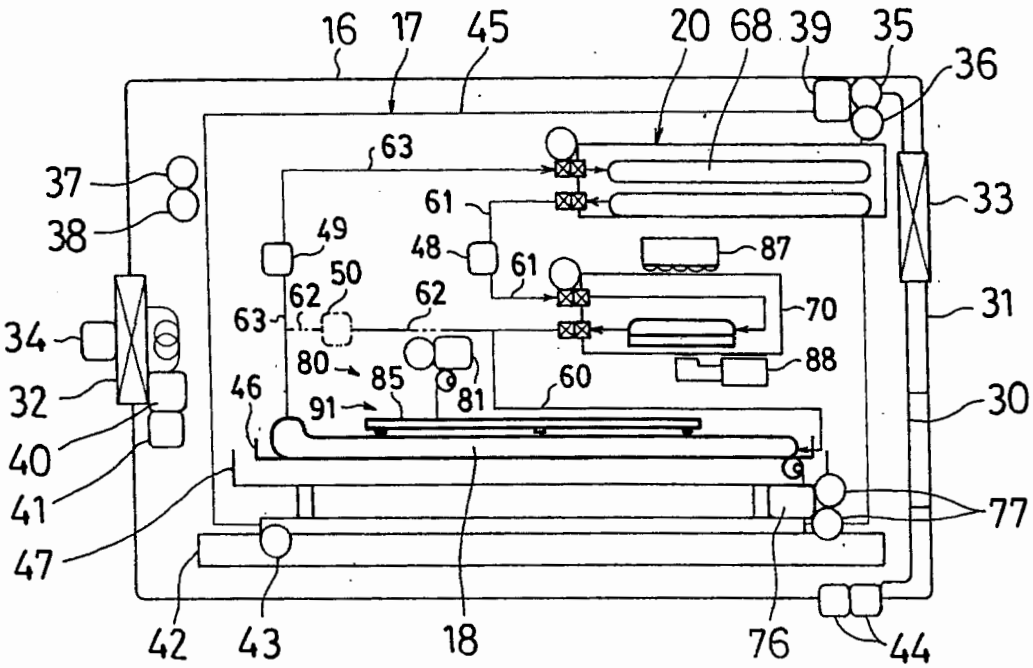


FIG.11A

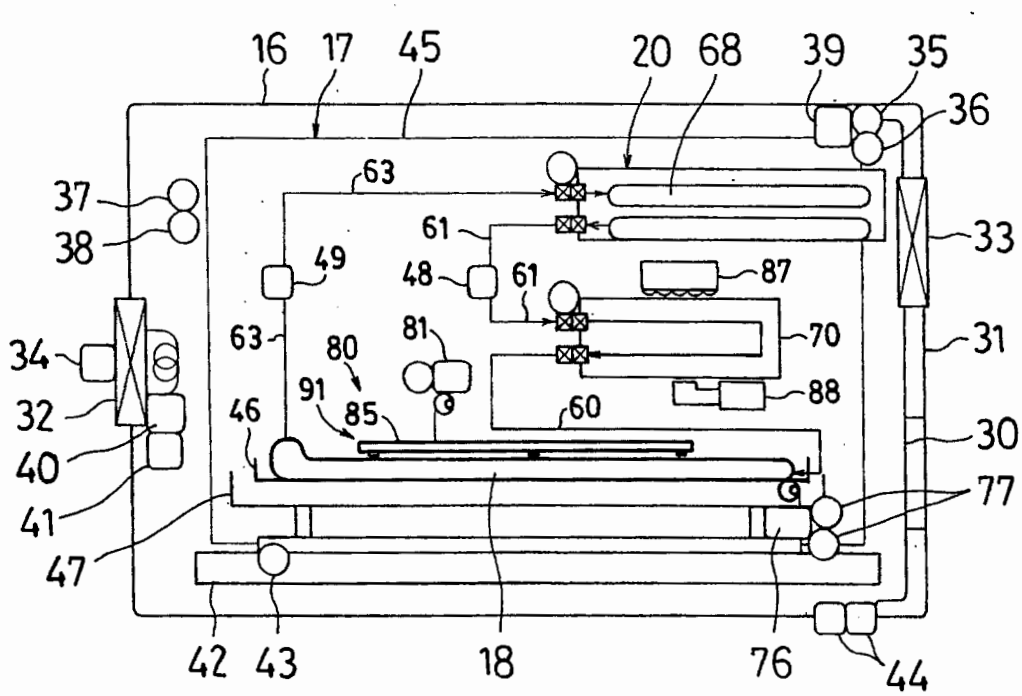


FIG.11B

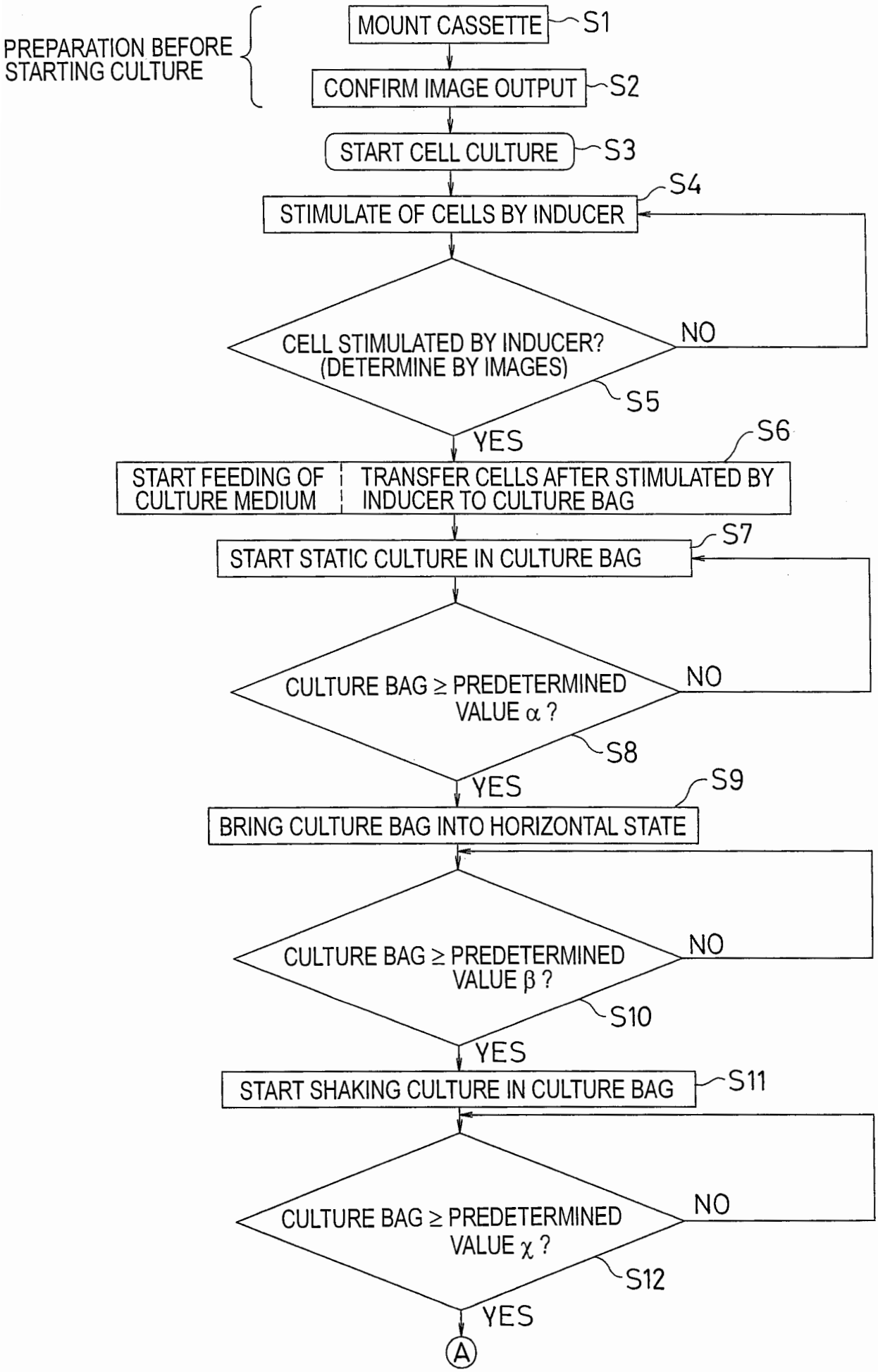
PREPARATION BEFORE STARTING CULTURE
MOUNT CASSETTE
S1
CONFIRM IMAGE OUTPUT
S2
START CELL CULTURE
S3
S4
STIMULATE OF CELLS BY INDUCER
CELL STIMULATED BY INDUCER? (DETERMINE BY IMAGES)
NO
S5
YES
S6
START FEEDING OF CULTURE MEDIUM
TRANSFER CELLS AFTER STIMULATED BY INDUCER TO CULTURE BAG
S7
START STATIC CULTURE IN CULTURE BAG
CULTURE BAG ≥ PREDETERMINED VALUE α ?
NO
S8
YES
S9
BRING CULTURE BAG INTO HORIZONTAL STATE
CULTURE BAG ≥ PREDETERMINED VALUE β ?
NO
S10
YES
START SHAKING CULTURE IN CULTURE BAG
S11
CULTURE BAG ≥ PREDETERMINED VALUE χ ?
NO
S12
YES
A

FIG.12

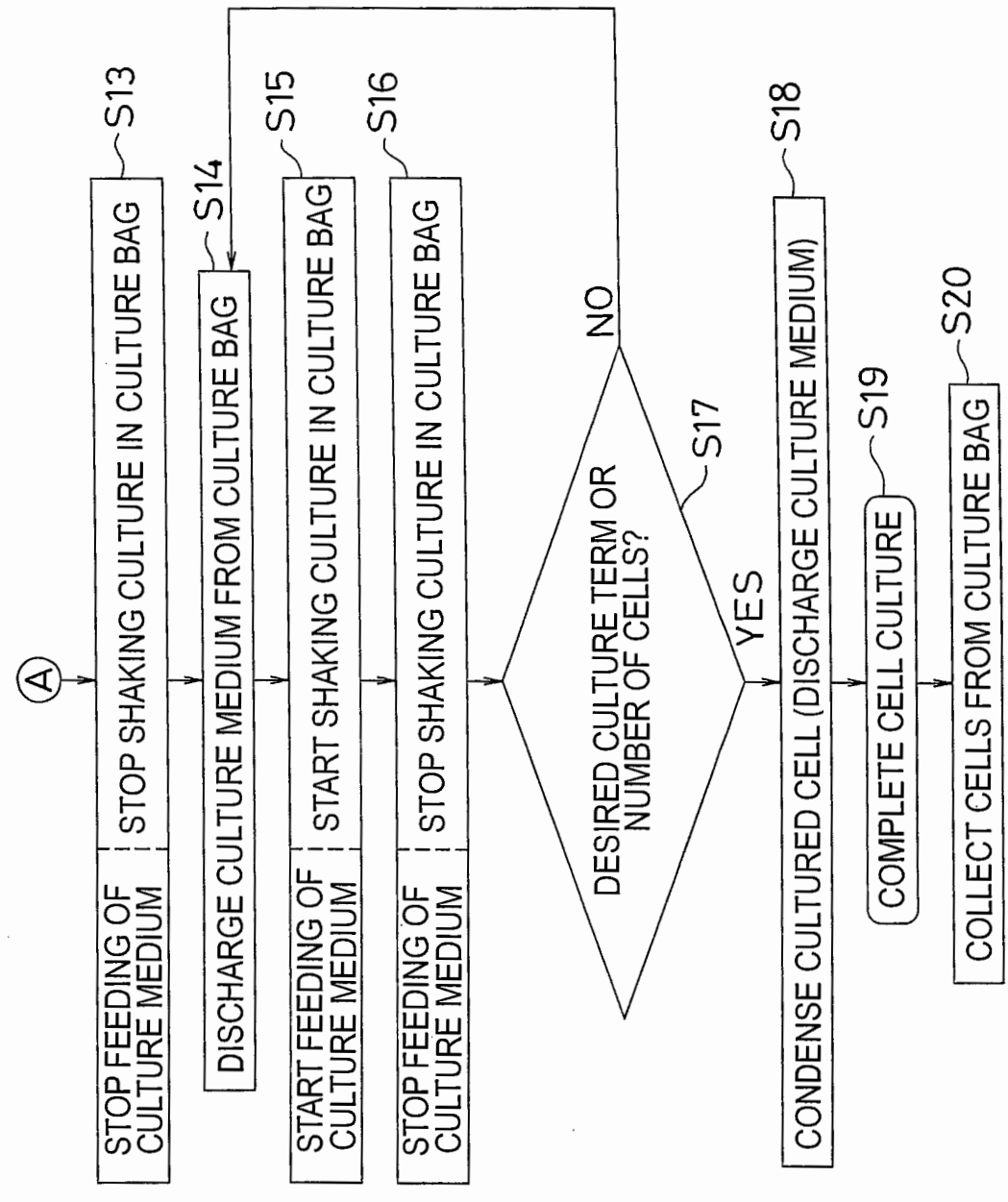
A
STOP FEEDING OF CULTURE MEDIUM
STOP SHAKING CULTURE IN CULTURE BAG
S13
DISCHARGE CULTURE MEDIUM FROM CULTURE BAG
S14
START FEEDING OF CULTURE MEDIUM
START SHAKING CULTURE IN CULTURE BAG
S15
STOP FEEDING OF CULTURE MEDIUM
STOP SHAKING CULTURE IN CULTURE BAG
S16
DESIRED CULTURE TERM OR NUMBER OF CELLS?
S17
NO
YES
CONDENSE CULTURED CELL (DISCHARGE CULTURE MEDIUM)
S18
COMPLETE CELL CULTURE
S19
COLLECT CELLS FROM CULTURE BAG
S20
PERFUSION CULTURE

FIG.13

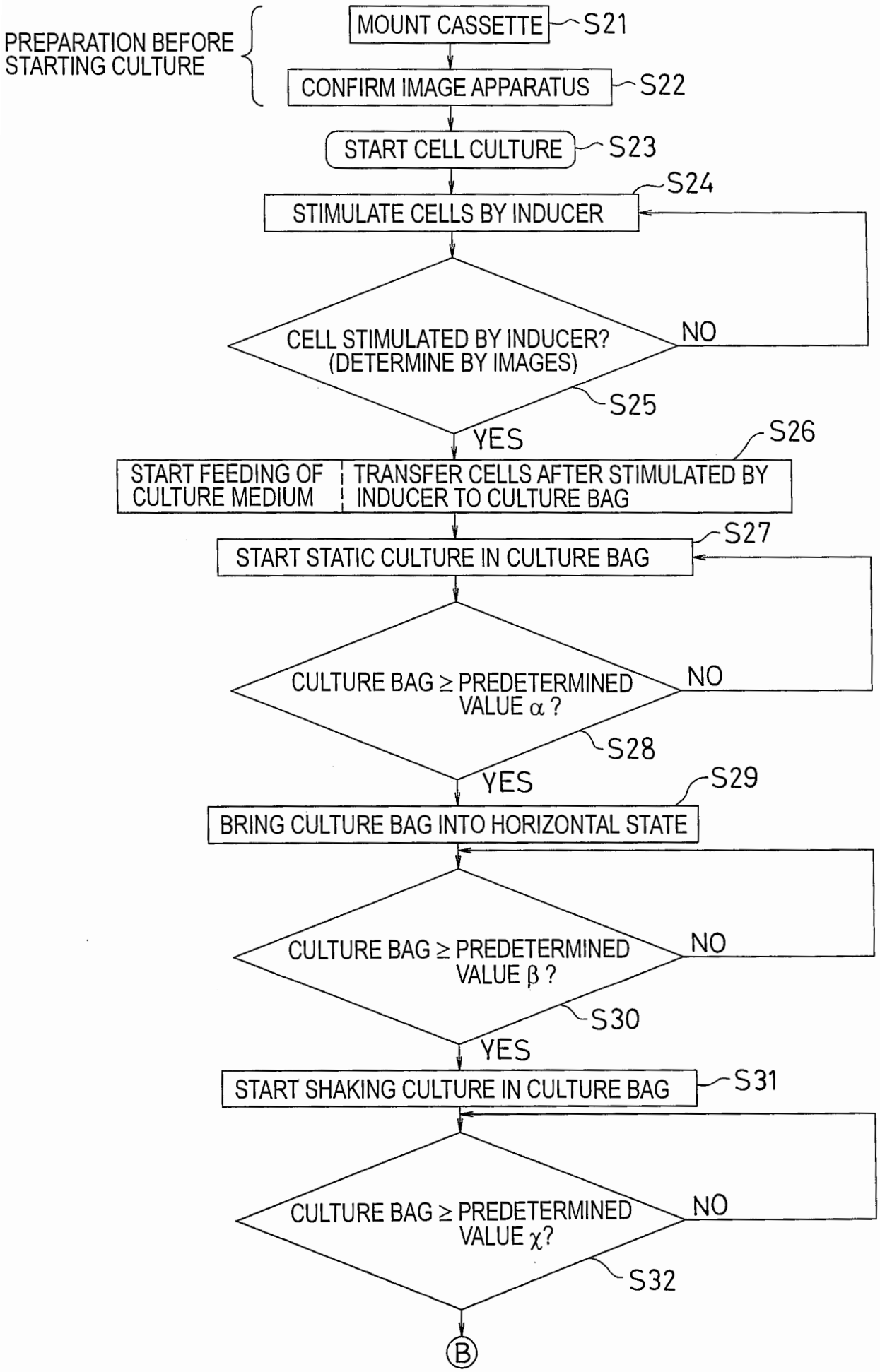
PREPARATION BEFORE STARTING CULTURE
MOUNT CASSETTE
S21
CONFIRM IMAGE APPARATUS
S22
START CELL CULTURE
S23
S24
STIMULATE CELLS BY INDUCER
CELL STIMULATED BY INDUCER? (DETERMINE BY IMAGES)
NO
S25
YES
S26
START FEEDING OF CULTURE MEDIUM
TRANSFER CELLS AFTER STIMULATED BY INDUCER TO CULTURE BAG
S27
START STATIC CULTURE IN CULTURE BAG
CULTURE BAG ≥ PREDETERMINED VALUE α ?
NO
S28
YES
S29
BRING CULTURE BAG INTO HORIZONTAL STATE
CULTURE BAG ≥ PREDETERMINED VALUE β ?
NO
S30
YES
START SHAKING CULTURE IN CULTURE BAG
S31
CULTURE BAG ≥ PREDETERMINED VALUE χ?
NO
S32
B

FIG.14

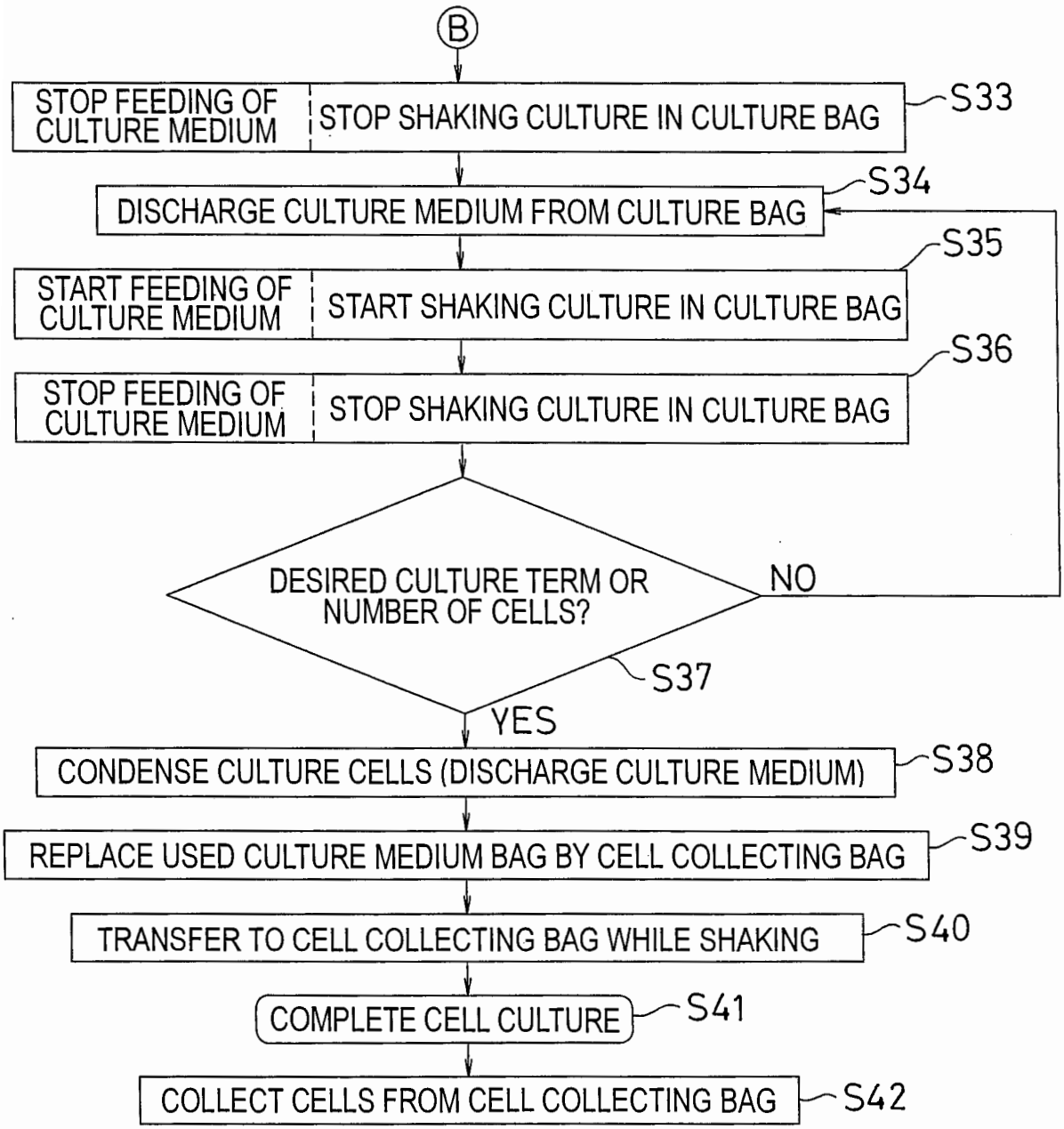
B
STOP FEEDING OF CULTURE MEDIUM
STOP SHAKING CULTURE IN CULTURE BAG
S33
DISCHARGE CULTURE MEDIUM FROM CULTURE BAG
S34
START FEEDING OF CULTURE MEDIUM
START SHAKING CULTURE IN CULTURE BAG
S35
STOP FEEDING OF CULTURE MEDIUM
STOP SHAKING CULTURE IN CULTURE BAG
S36
DESIRED CULTURE TERM OR NUMBER OF CELLS?
NO
S37
YES
CONDENSE CULTURE CELLS (DISCHARGE CULTURE MEDIUM)
S38
REPLACE USED CULTURE MEDIUM BAG BY CELL COLLECTING BAG
S39
TRANSFER TO CELL COLLECTING BAG WHILE SHAKING
S40
COMPLETE CELL CULTURE
S41
COLLECT CELLS FROM CELL COLLECTING BAG
S42

FIG.15

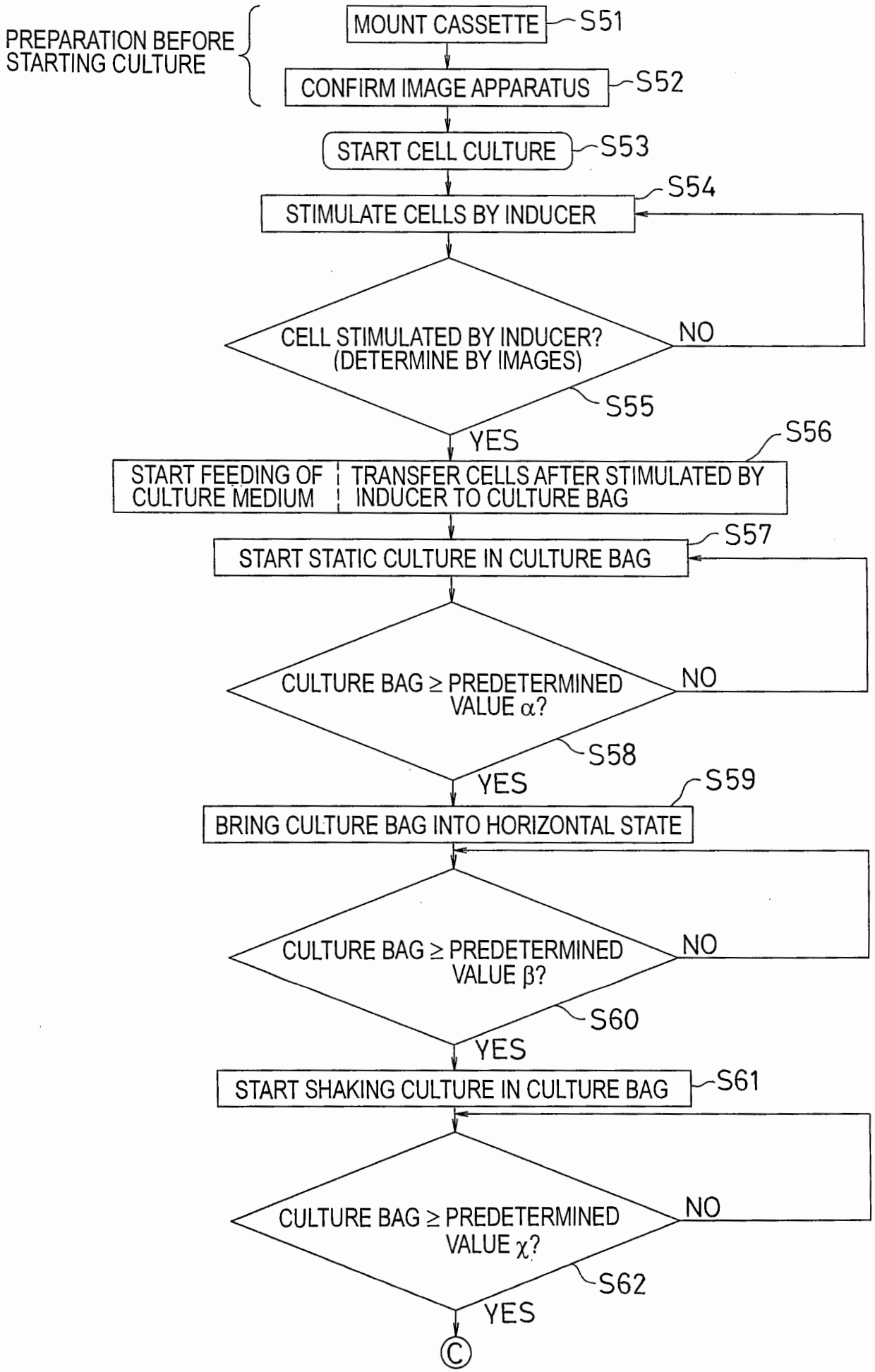
PREPARATION BEFORE STARTING CULTURE
MOUNT CASSETTE
S51
CONFIRM IMAGE APPARATUS
S52
START CELL CULTURE
S53
STIMULATE CELLS BY INDUCER
S54
CELL STIMULATED BY INDUCER? (DETERMINE BY IMAGES)
NO
S55
YES
S56
START FEEDING OF CULTURE MEDIUM
TRANSFER CELLS AFTER STIMULATED BY INDUCER TO CULTURE BAG
START STATIC CULTURE IN CULTURE BAG
S57
CULTURE BAG ≥ PREDETERMINED VALUE α?
NO
S58
YES
S59
BRING CULTURE BAG INTO HORIZONTAL STATE
CULTURE BAG ≥ PREDETERMINED VALUE β?
NO
S60
YES
START SHAKING CULTURE IN CULTURE BAG
S61
CULTURE BAG ≥ PREDETERMINED VALUE χ?
NO
S62
YES
Ⓒ

FIG.16

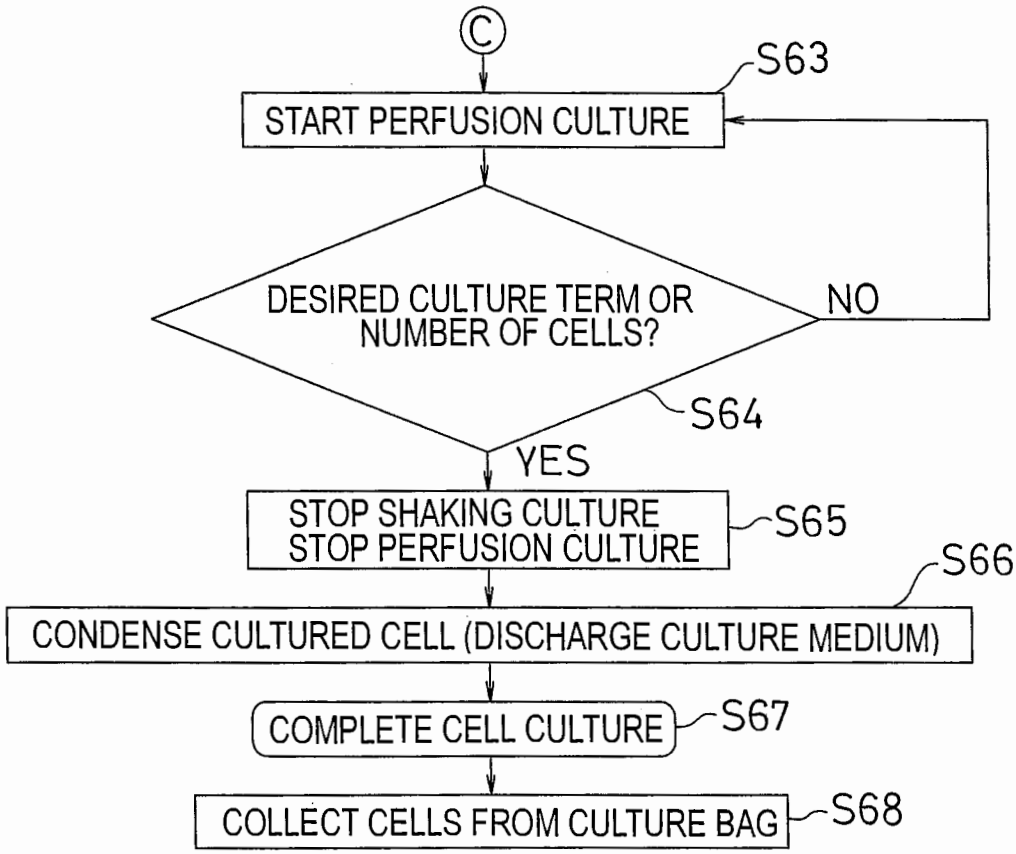
C
S63
START PERFUSION CULTURE
DESIRED CULTURE TERM OR NUMBER OF CELLS?
NO
S64
YES
STOP SHAKING CULTURE
STOP PERFUSION CULTURE
S65
S66
CONDENSE CULTURED CELL (DISCHARGE CULTURE MEDIUM)
COMPLETE CELL CULTURE
S67
COLLECT CELLS FROM CULTURE BAG
S68

FIG.17

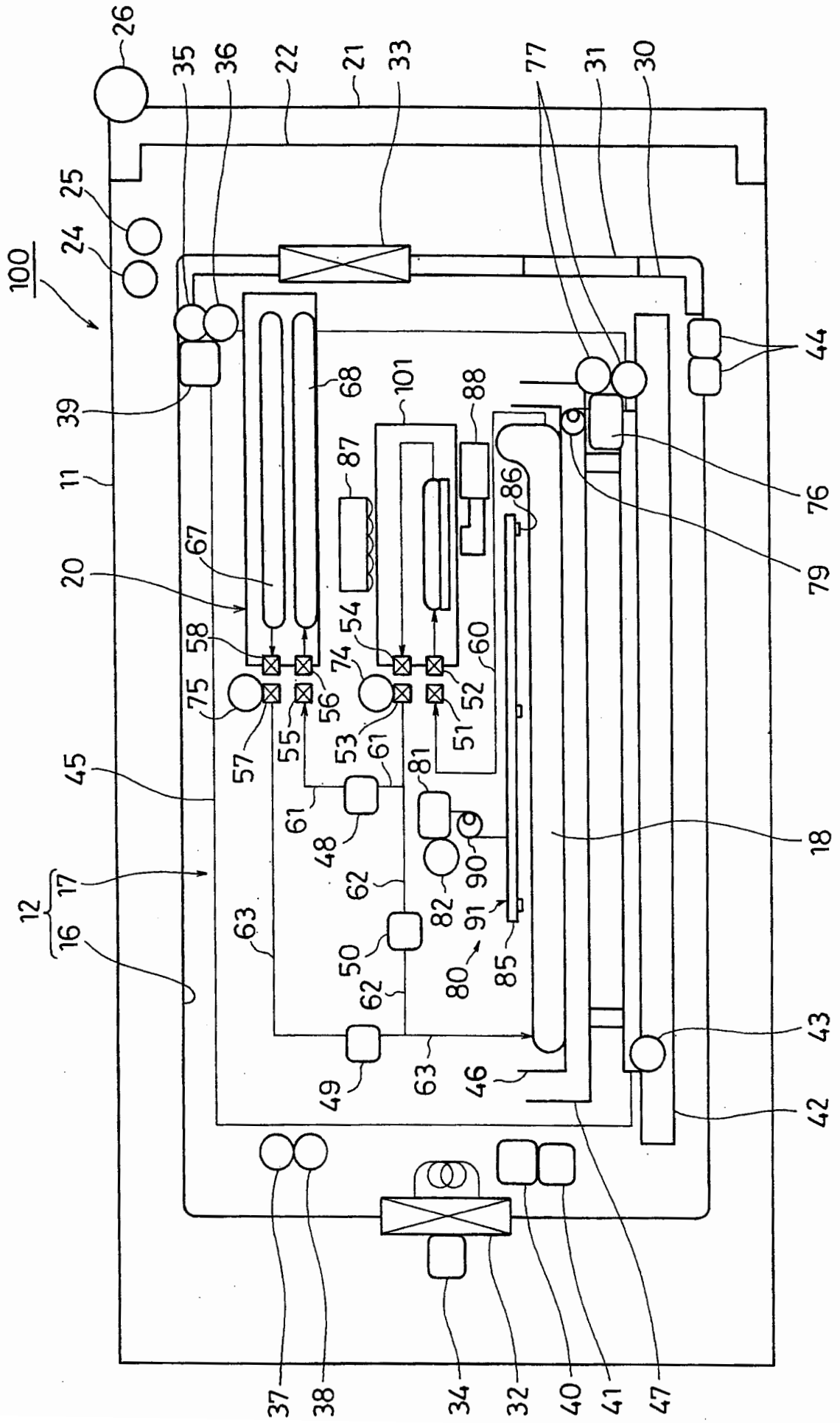
100
11
12
16
17
18
20
21
22
24
25
26
30
31
33
35
36
37
38
39
40
41
42
43
44
45
46
47
48
49
50
51
52
53
54
55
56
57
58
60
61
62
63
67
68
74
75
76
77
79
80
81
82
85
86
87
88
90
91
101

FIG.18

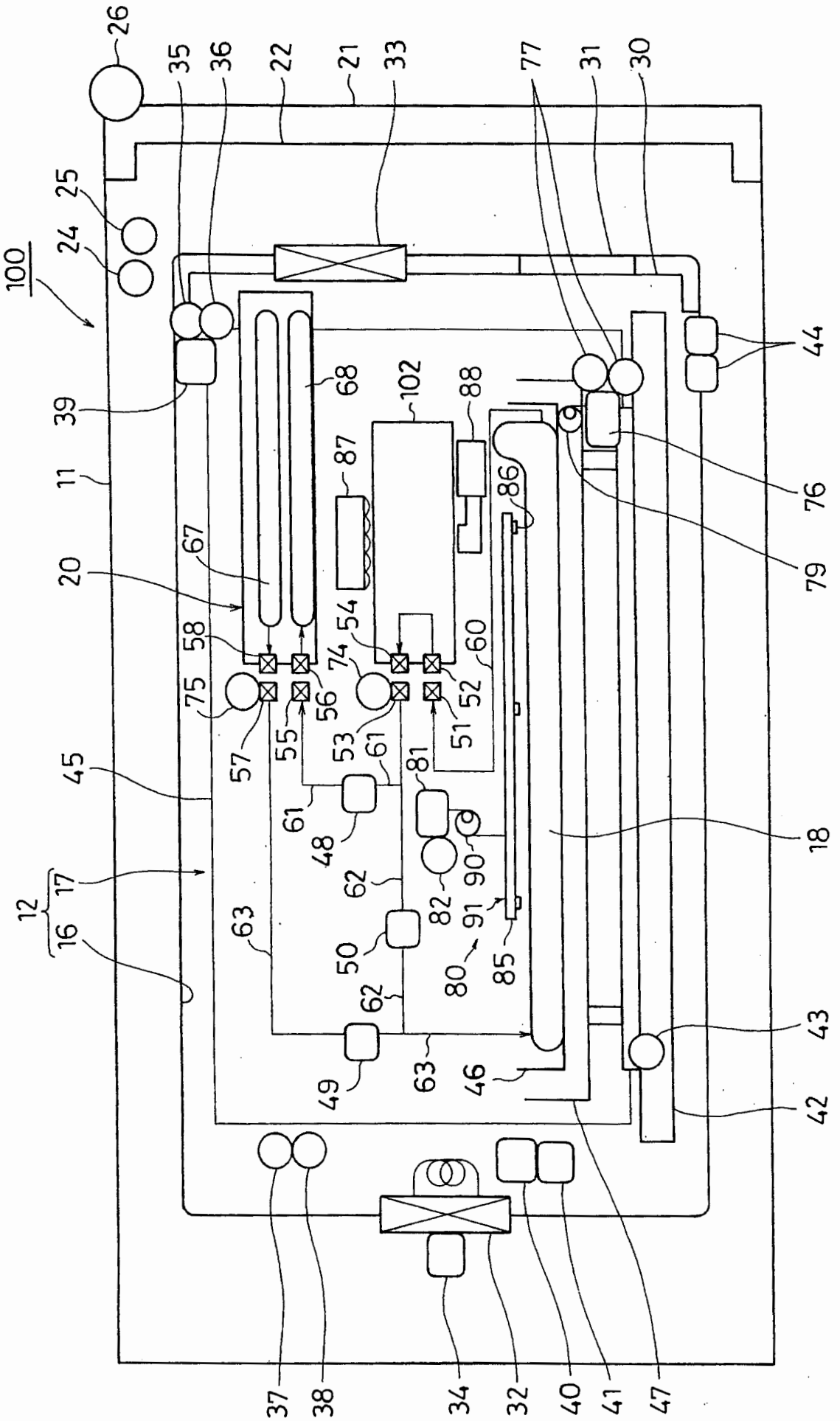
100
11
12
16
17
18
20
21
22
24
25
26
30
31
33
34
35
36
37
38
39
40
41
42
43
44
45
46
47
48
49
50
51
52
53
54
55
56
57
58
60
61
62
63
67
68
74
75
76
77
79
80
81
82
85
86
87
88
90
91
102

FIG.19

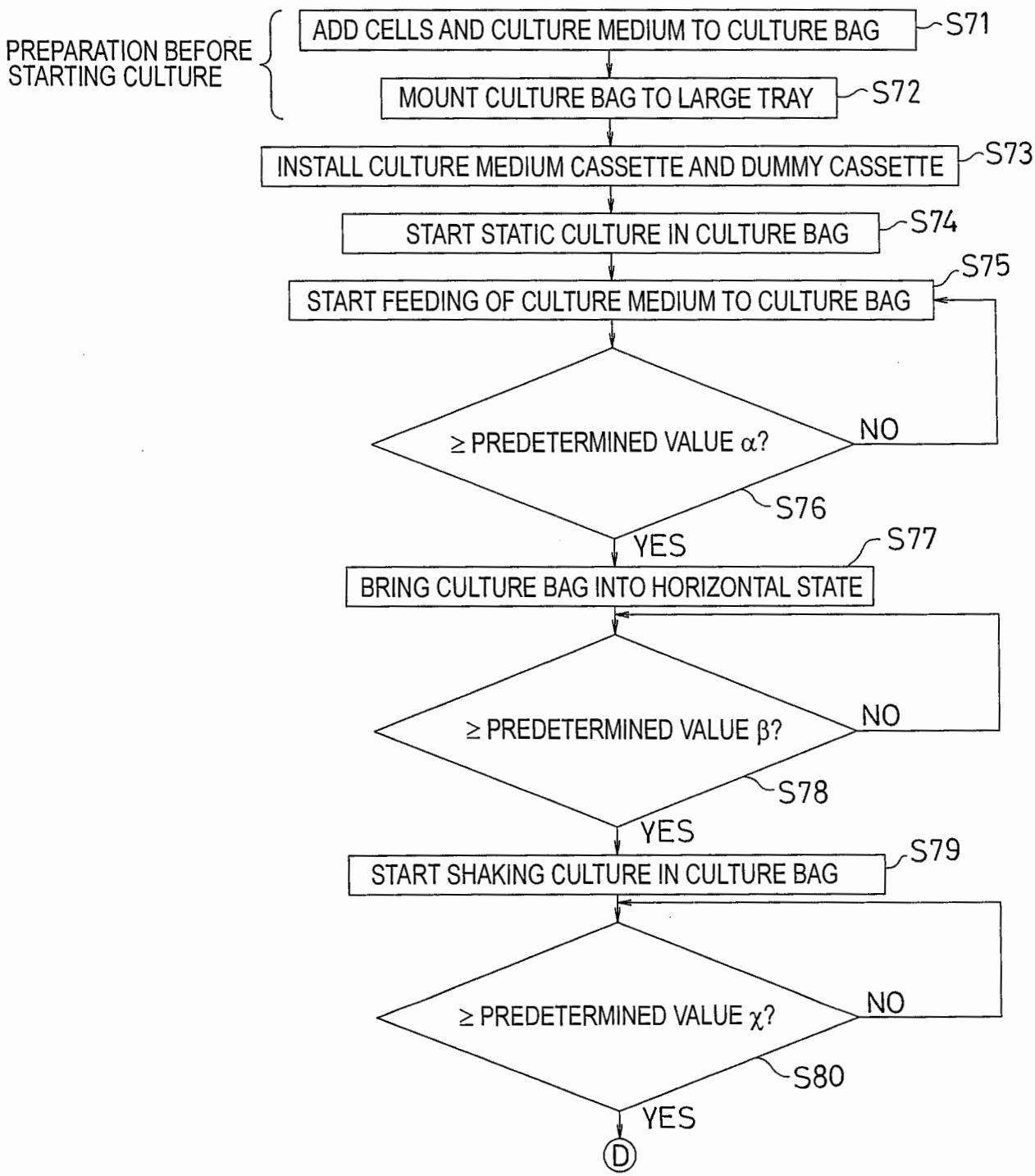
PREPARATION BEFORE STARTING CULTURE
ADD CELLS AND CULTURE MEDIUM TO CULTURE BAG
S71
MOUNT CULTURE BAG TO LARGE TRAY
S72
INSTALL CULTURE MEDIUM CASSETTE AND DUMMY CASSETTE
S73
START STATIC CULTURE IN CULTURE BAG
S74
START FEEDING OF CULTURE MEDIUM TO CULTURE BAG
S75
≥ PREDETERMINED VALUE α?
NO
S76
YES
BRING CULTURE BAG INTO HORIZONTAL STATE
S77
≥ PREDETERMINED VALUE β?
NO
S78
YES
START SHAKING CULTURE IN CULTURE BAG
S79
≥ PREDETERMINED VALUE χ?
NO
S80
YES
D

FIG.20

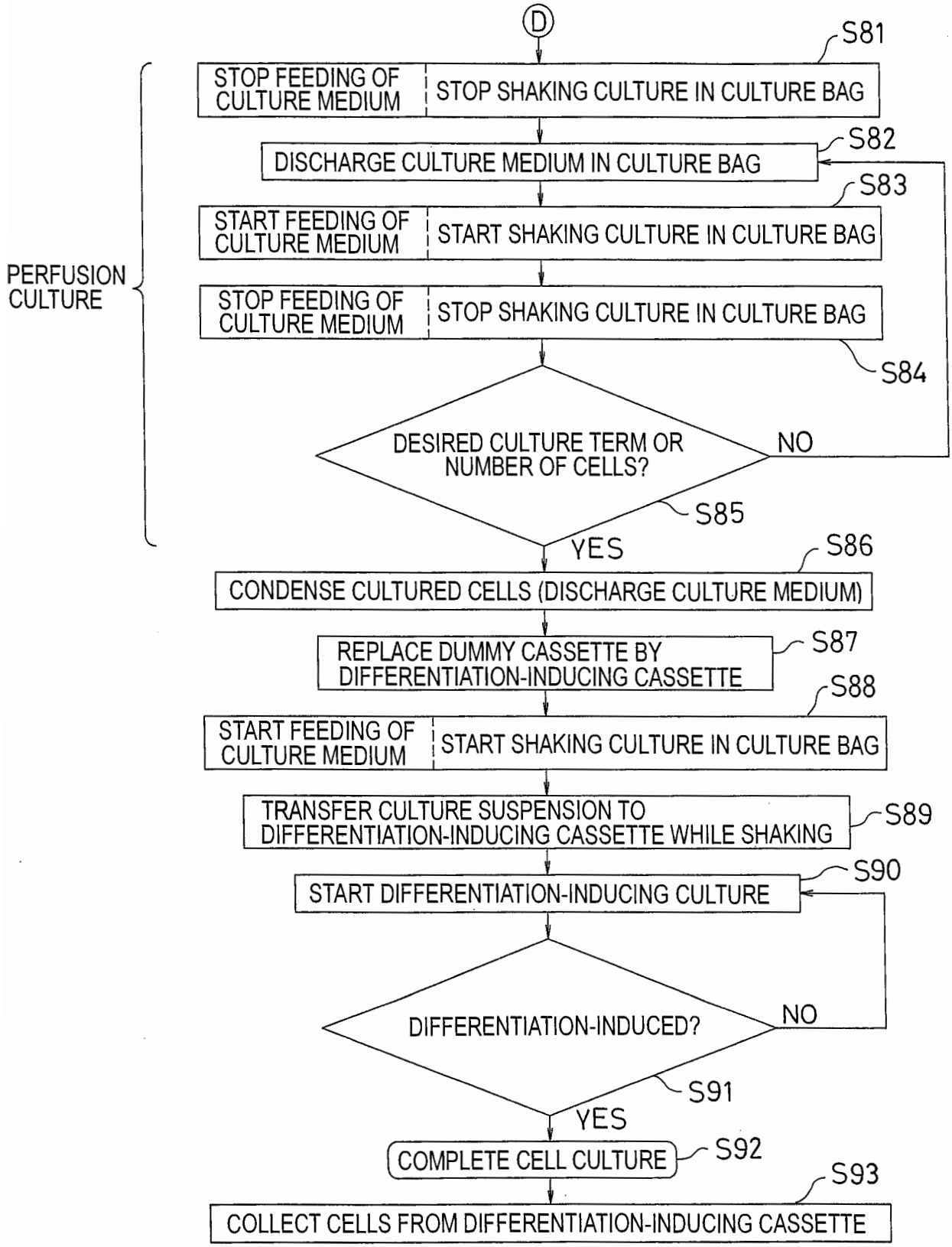
D
S81
STOP FEEDING OF CULTURE MEDIUM
STOP SHAKING CULTURE IN CULTURE BAG
S82
DISCHARGE CULTURE MEDIUM IN CULTURE BAG
S83
START FEEDING OF CULTURE MEDIUM
START SHAKING CULTURE IN CULTURE BAG
PERFUSION CULTURE
STOP FEEDING OF CULTURE MEDIUM
STOP SHAKING CULTURE IN CULTURE BAG
S84
DESIRED CULTURE TERM OR NUMBER OF CELLS?
NO
S85
YES
S86
CONDENSE CULTURED CELLS (DISCHARGE CULTURE MEDIUM)
REPLACE DUMMY CASSETTE BY DIFFERENTIATION-INDUCING CASSETTE
S87
S88
START FEEDING OF CULTURE MEDIUM
START SHAKING CULTURE IN CULTURE BAG
TRANSFER CULTURE SUSPENSION TO DIFFERENTIATION-INDUCING CASSETTE WHILE SHAKING
S89
S90
START DIFFERENTIATION-INDUCING CULTURE
DIFFERENTIATION-INDUCED?
NO
S91
YES
COMPLETE CELL CULTURE
S92
S93
COLLECT CELLS FROM DIFFERENTIATION-INDUCING CASSETTE

FIG.21

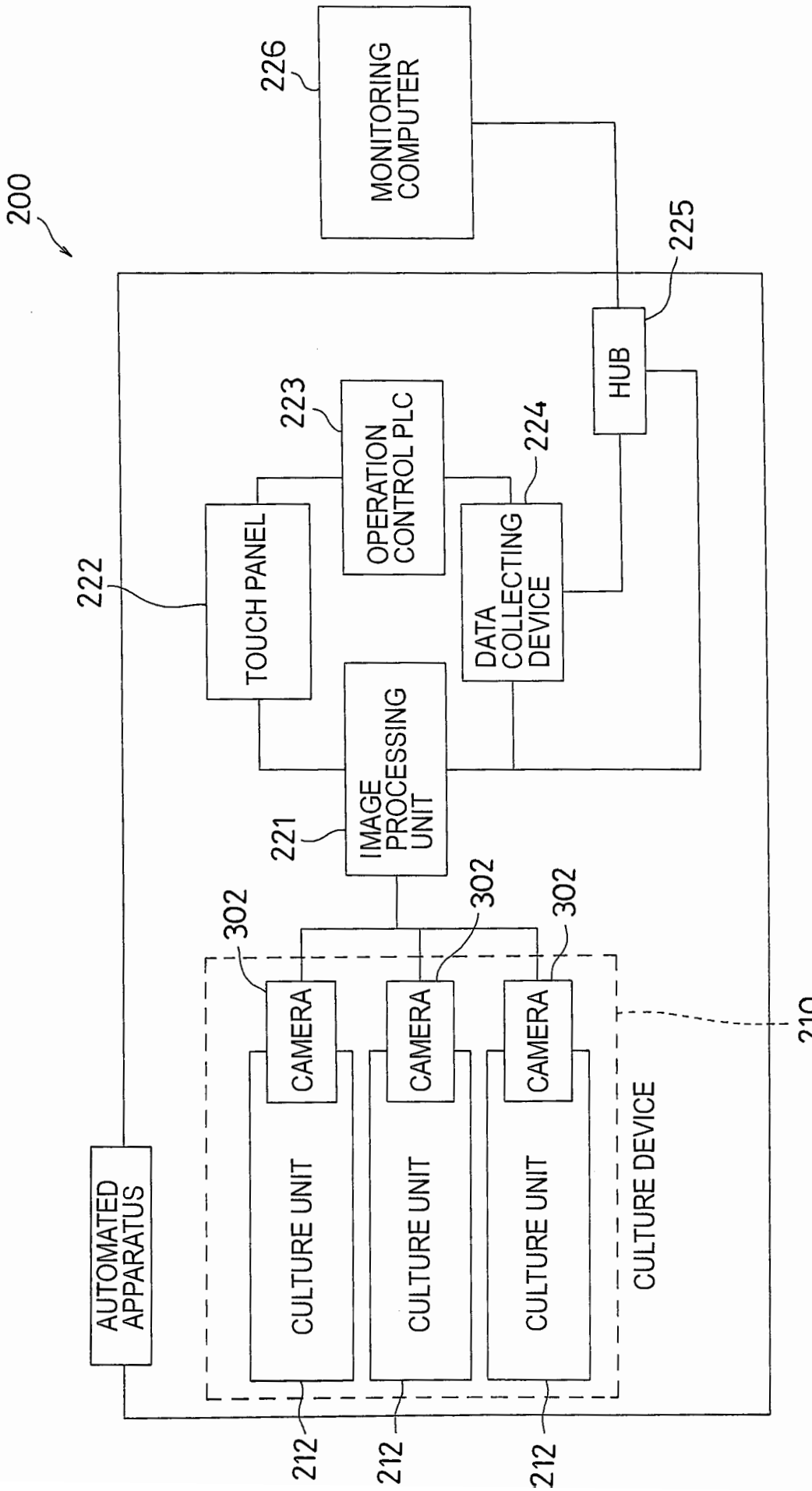
200
226
MONITORING COMPUTER
225
HUB
223
OPERATION CONTROL PLC
224
DATA COLLECTING DEVICE
222
TOUCH PANEL
IMAGE PROCESSING UNIT
221
302
302
302
CAMERA
CAMERA
CAMERA
CULTURE UNIT
CULTURE UNIT
CULTURE UNIT
CULTURE DEVICE
210
AUTOMATED APPARATUS
212
212
212

FIG.22

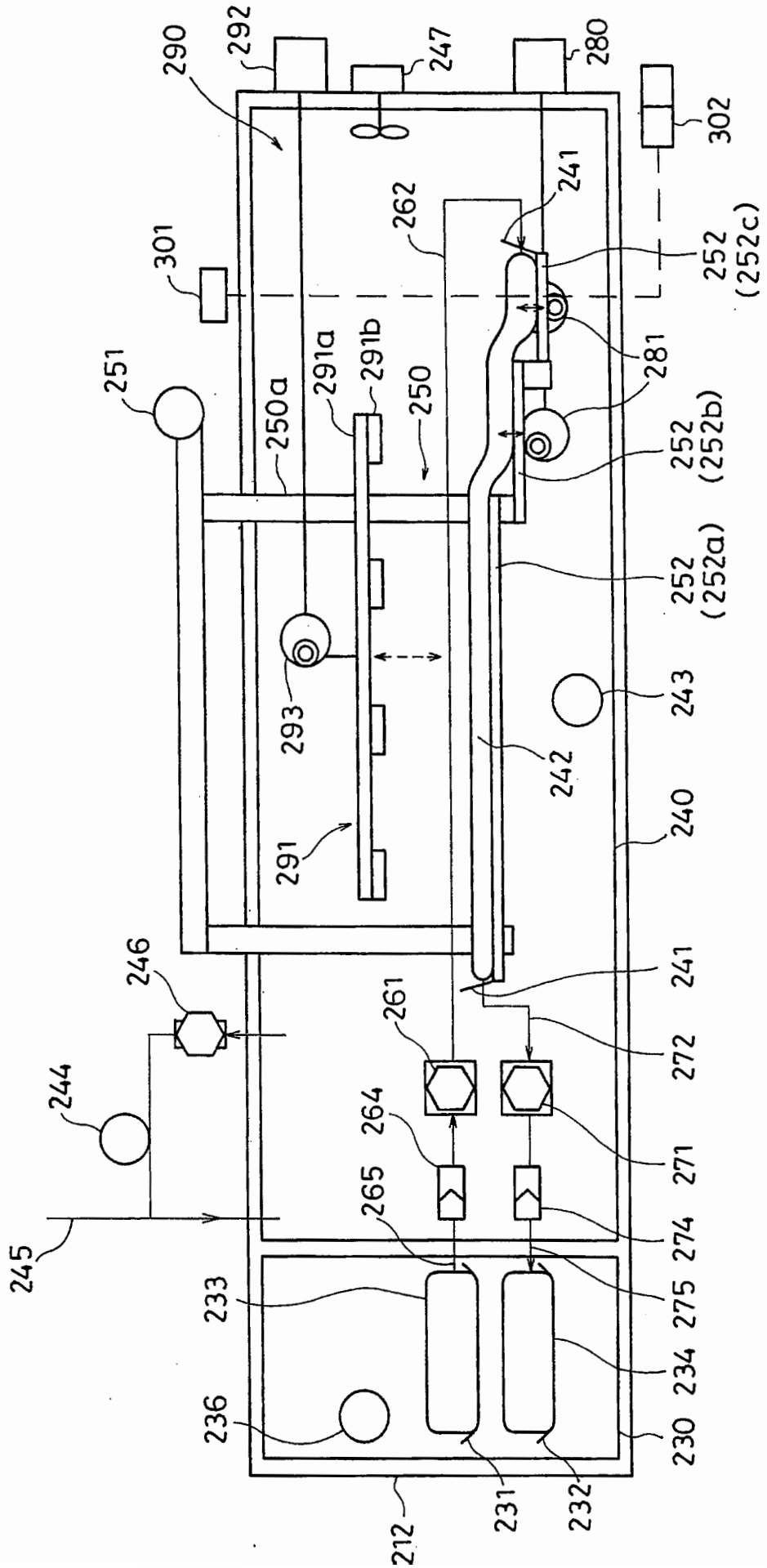
290
292
247
280
302
301
241
262
252
(252c)
281
251
250a
291a
291b
250
252
(252b)
252
(252a)
293
243
242
240
291
246
241
261
272
244
264
271
265
274
245
233
275
234
236
230
231
232
212

FIG.23

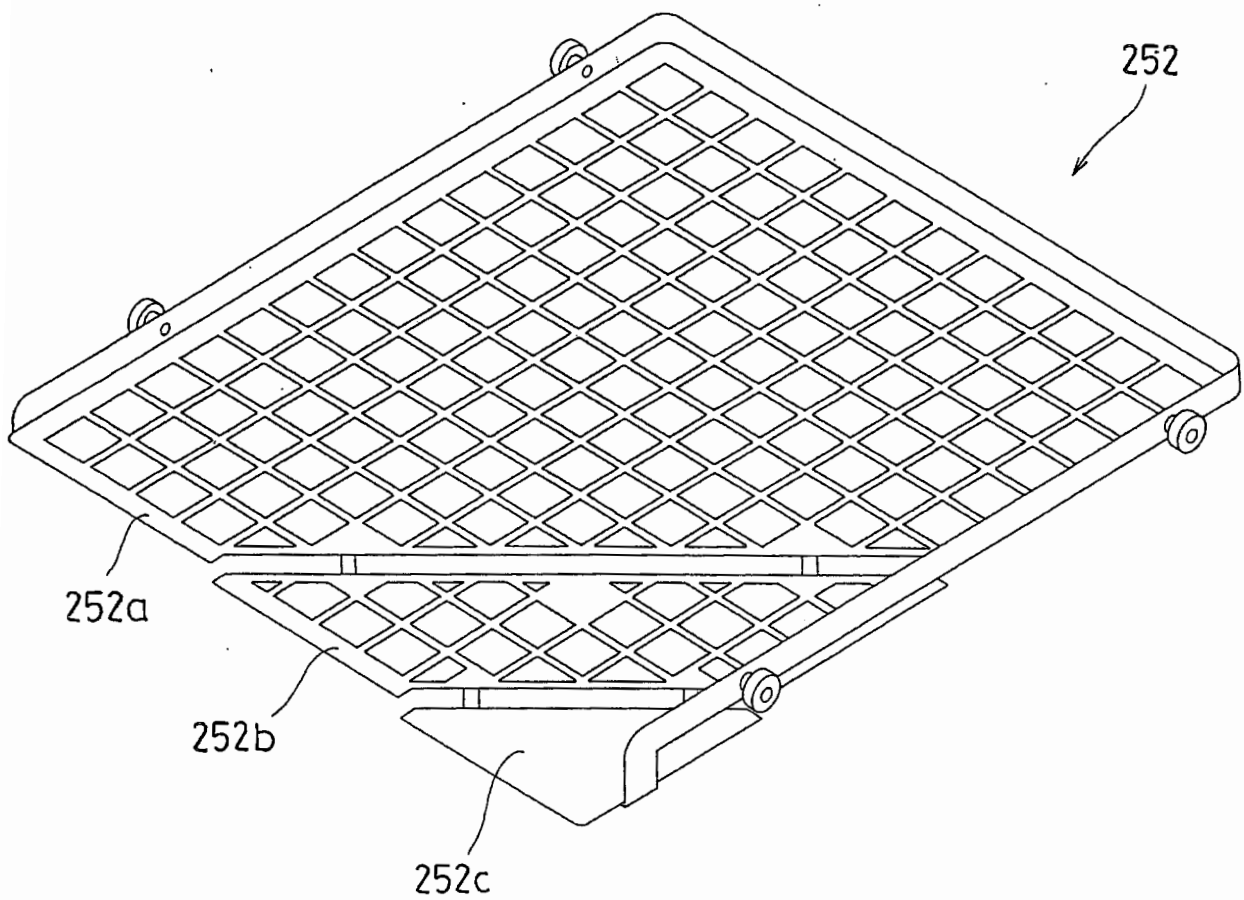


FIG.24

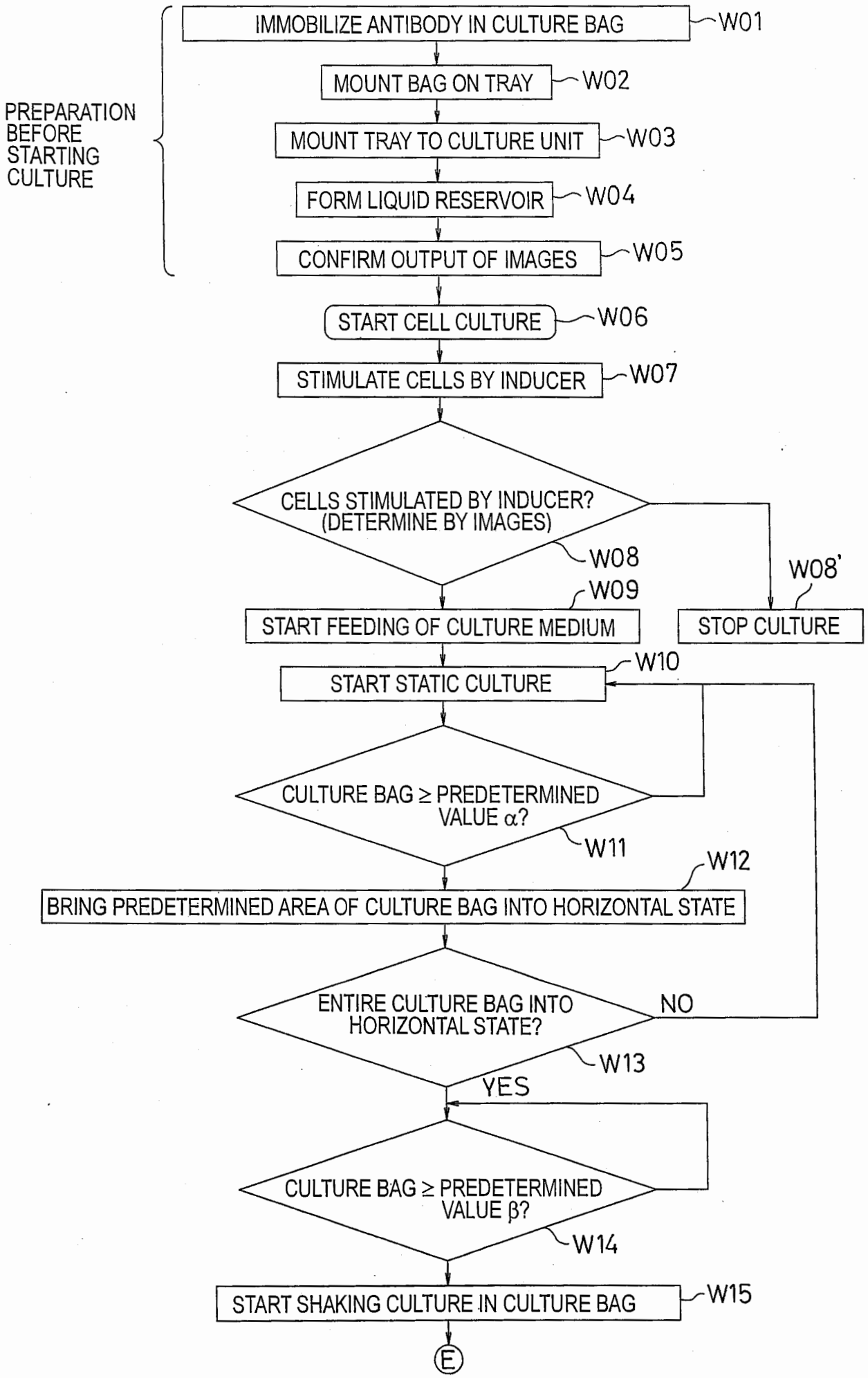
PREPARATION BEFORE STARTING CULTURE
IMMOBILIZE ANTIBODY IN CULTURE BAG
W01
MOUNT BAG ON TRAY
W02
MOUNT TRAY TO CULTURE UNIT
W03
FORM LIQUID RESERVOIR
W04
CONFIRM OUTPUT OF IMAGES
W05
START CELL CULTURE
W06
STIMULATE CELLS BY INDUCER
W07
CELLS STIMULATED BY INDUCER? (DETERMINE BY IMAGES)
W08
W08'
W09
START FEEDING OF CULTURE MEDIUM
STOP CULTURE
W10
START STATIC CULTURE
CULTURE BAG ≥ PREDETERMINED VALUE α?
W11
W12
BRING PREDETERMINED AREA OF CULTURE BAG INTO HORIZONTAL STATE
ENTIRE CULTURE BAG INTO HORIZONTAL STATE?
NO
W13
YES
CULTURE BAG ≥ PREDETERMINED VALUE β?
W14
START SHAKING CULTURE IN CULTURE BAG
W15
E

FIG.25

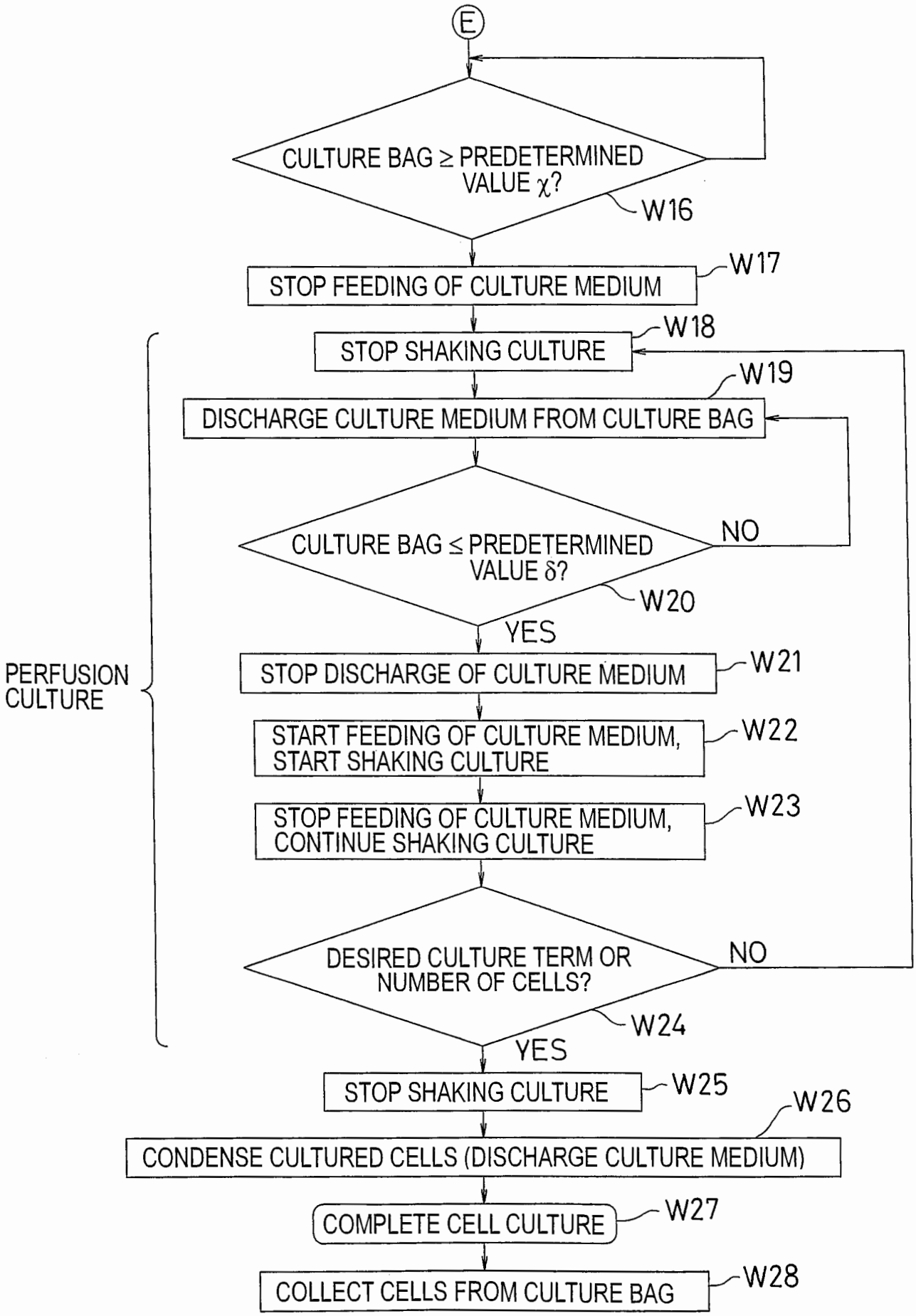
E
CULTURE BAG ≥ PREDETERMINED VALUE χ?
W16
STOP FEEDING OF CULTURE MEDIUM
W17
STOP SHAKING CULTURE
W18
DISCHARGE CULTURE MEDIUM FROM CULTURE BAG
W19
CULTURE BAG ≤ PREDETERMINED VALUE δ?
NO
W20
YES
STOP DISCHARGE OF CULTURE MEDIUM
W21
START FEEDING OF CULTURE MEDIUM, START SHAKING CULTURE
W22
STOP FEEDING OF CULTURE MEDIUM, CONTINUE SHAKING CULTURE
W23
DESIRED CULTURE TERM OR NUMBER OF CELLS?
NO
W24
YES
PERFUSION CULTURE
STOP SHAKING CULTURE
W25
W26
CONDENSE CULTURED CELLS (DISCHARGE CULTURE MEDIUM)
COMPLETE CELL CULTURE
W27
COLLECT CELLS FROM CULTURE BAG
W28

FIG.26

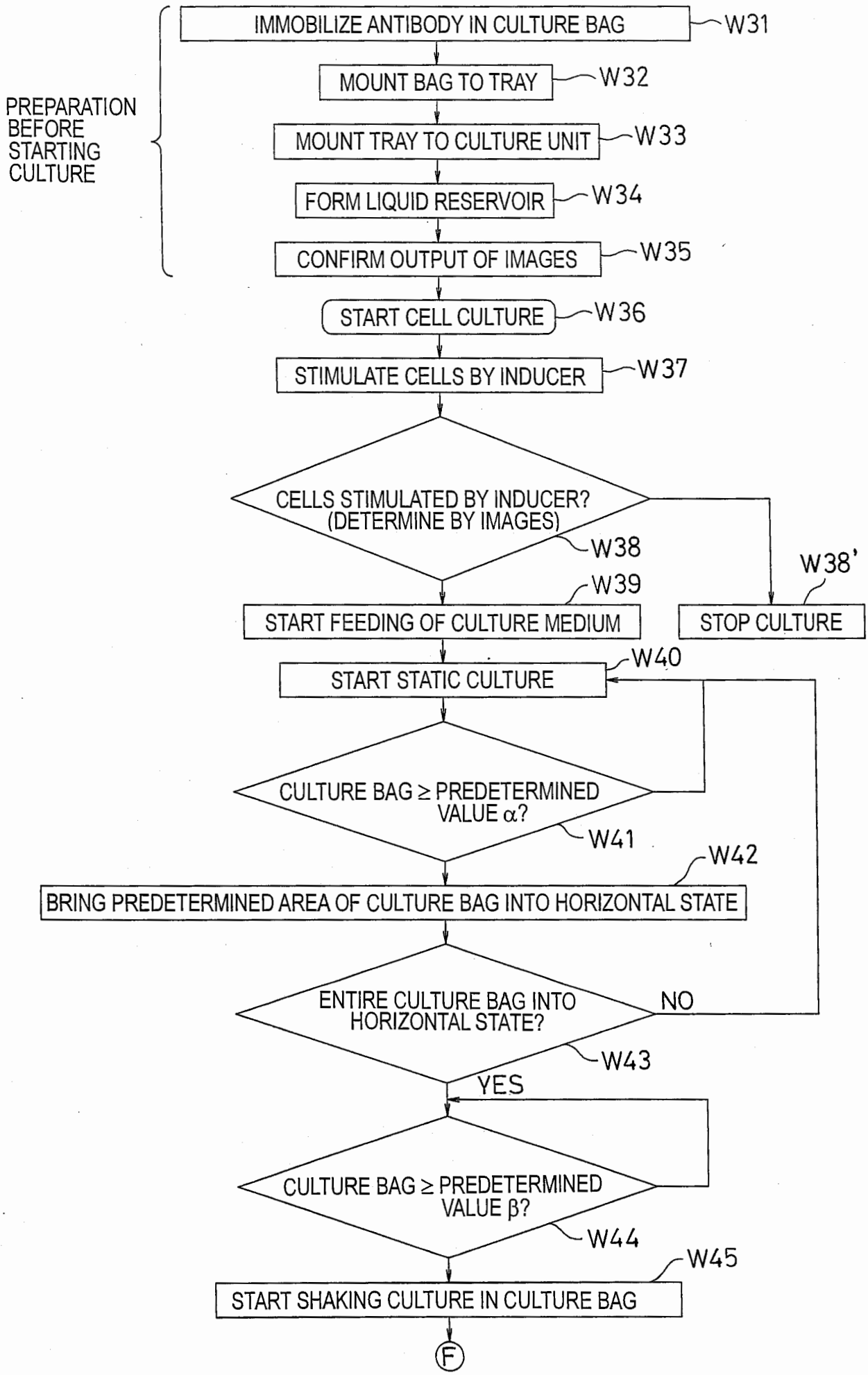
PREPARATION BEFORE STARTING CULTURE
IMMOBILIZE ANTIBODY IN CULTURE BAG
W31
MOUNT BAG TO TRAY
W32
MOUNT TRAY TO CULTURE UNIT
W33
FORM LIQUID RESERVOIR
W34
CONFIRM OUTPUT OF IMAGES
W35
START CELL CULTURE
W36
STIMULATE CELLS BY INDUCER
W37
CELLS STIMULATED BY INDUCER? (DETERMINE BY IMAGES)
W38
W38'
STOP CULTURE
W39
START FEEDING OF CULTURE MEDIUM
W40
START STATIC CULTURE
CULTURE BAG ≥ PREDETERMINED VALUE α?
W41
W42
BRING PREDETERMINED AREA OF CULTURE BAG INTO HORIZONTAL STATE
ENTIRE CULTURE BAG INTO HORIZONTAL STATE?
NO
W43
YES
CULTURE BAG ≥ PREDETERMINED VALUE β?
W44
W45
START SHAKING CULTURE IN CULTURE BAG
F

FIG.27

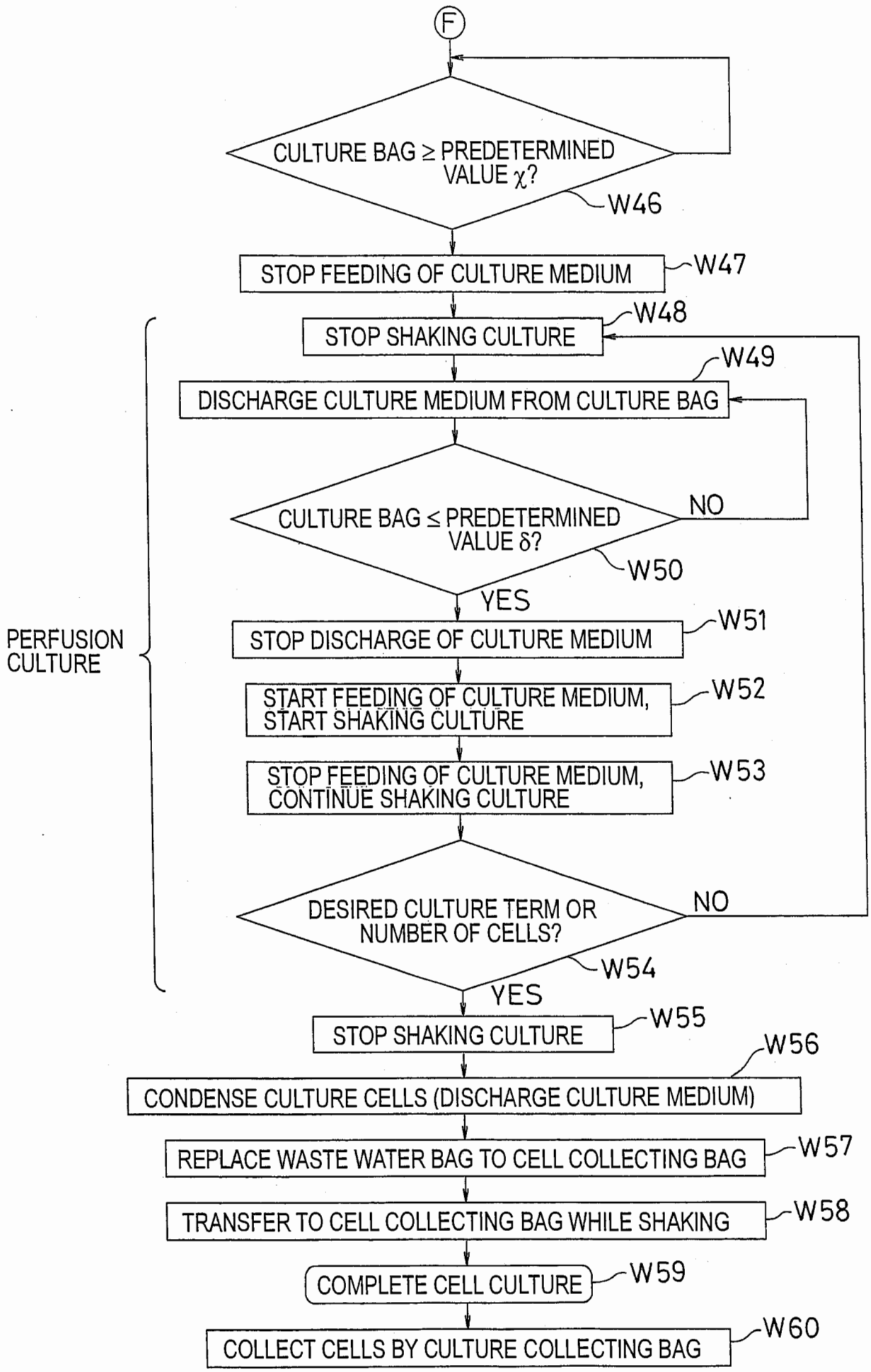
F
CULTURE BAG ≥ PREDETERMINED VALUE χ?
W46
STOP FEEDING OF CULTURE MEDIUM
W47
STOP SHAKING CULTURE
W48
DISCHARGE CULTURE MEDIUM FROM CULTURE BAG
W49
CULTURE BAG ≤ PREDETERMINED VALUE δ?
NO
W50
YES
PERFUSION CULTURE
STOP DISCHARGE OF CULTURE MEDIUM
W51
START FEEDING OF CULTURE MEDIUM, START SHAKING CULTURE
W52
STOP FEEDING OF CULTURE MEDIUM, CONTINUE SHAKING CULTURE
W53
DESIRED CULTURE TERM OR NUMBER OF CELLS?
NO
W54
YES
STOP SHAKING CULTURE
W55
CONDENSE CULTURE CELLS (DISCHARGE CULTURE MEDIUM)
W56
REPLACE WASTE WATER BAG TO CELL COLLECTING BAG
W57
TRANSFER TO CELL COLLECTING BAG WHILE SHAKING
W58
COMPLETE CELL CULTURE
W59
COLLECT CELLS BY CULTURE COLLECTING BAG
W60

FIG.28

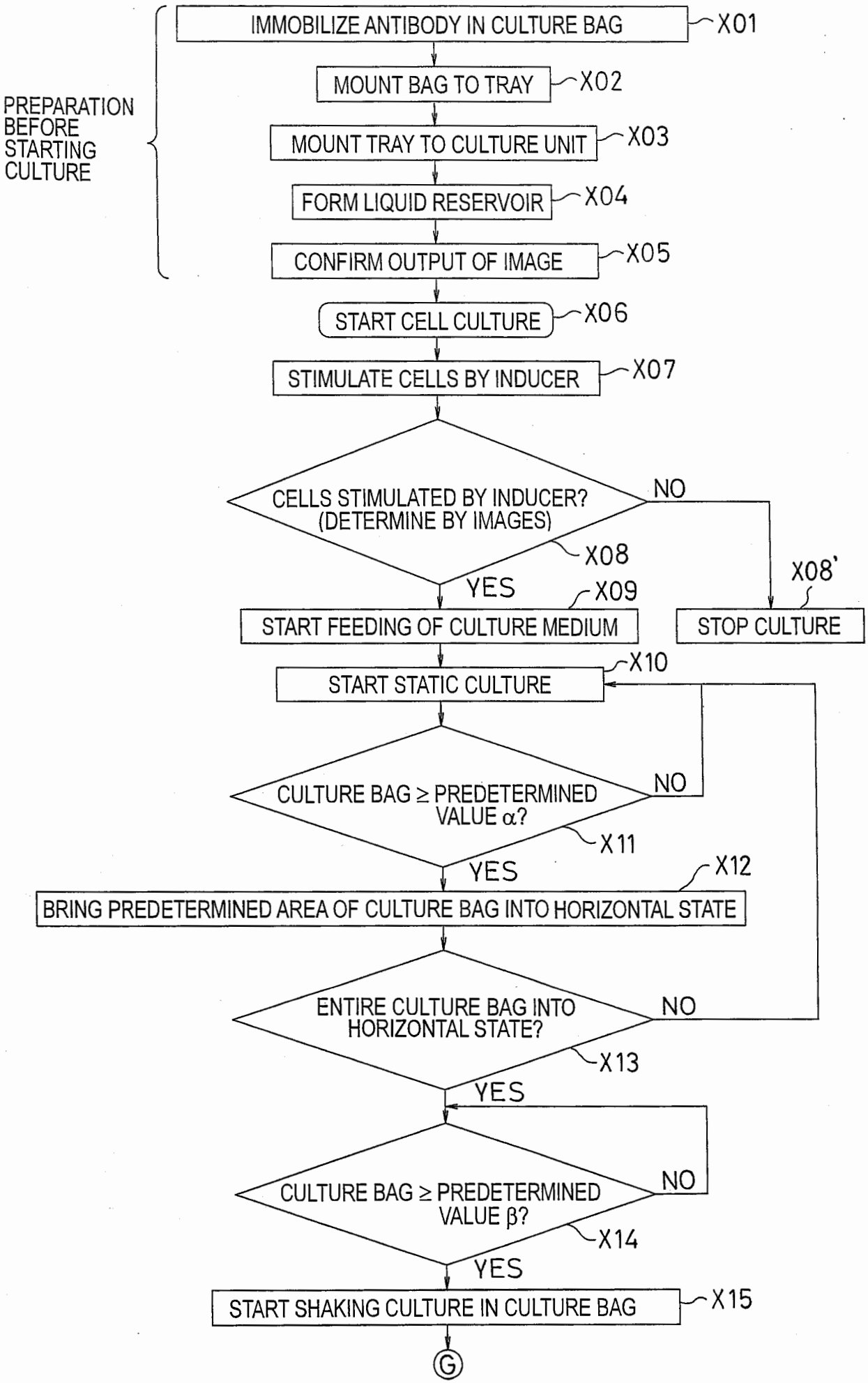
PREPARATION BEFORE STARTING CULTURE
IMMOBILIZE ANTIBODY IN CULTURE BAG
X01
MOUNT BAG TO TRAY
X02
MOUNT TRAY TO CULTURE UNIT
X03
FORM LIQUID RESERVOIR
X04
CONFIRM OUTPUT OF IMAGE
X05
START CELL CULTURE
X06
STIMULATE CELLS BY INDUCER
X07
CELLS STIMULATED BY INDUCER? (DETERMINE BY IMAGES)
X08
NO
YES
X08'
STOP CULTURE
X09
START FEEDING OF CULTURE MEDIUM
X10
START STATIC CULTURE
CULTURE BAG ≥ PREDETERMINED VALUE α?
X11
NO
YES
X12
BRING PREDETERMINED AREA OF CULTURE BAG INTO HORIZONTAL STATE
ENTIRE CULTURE BAG INTO HORIZONTAL STATE?
X13
NO
YES
CULTURE BAG ≥ PREDETERMINED VALUE β?
X14
NO
YES
START SHAKING CULTURE IN CULTURE BAG
X15
Ⓖ

FIG.29

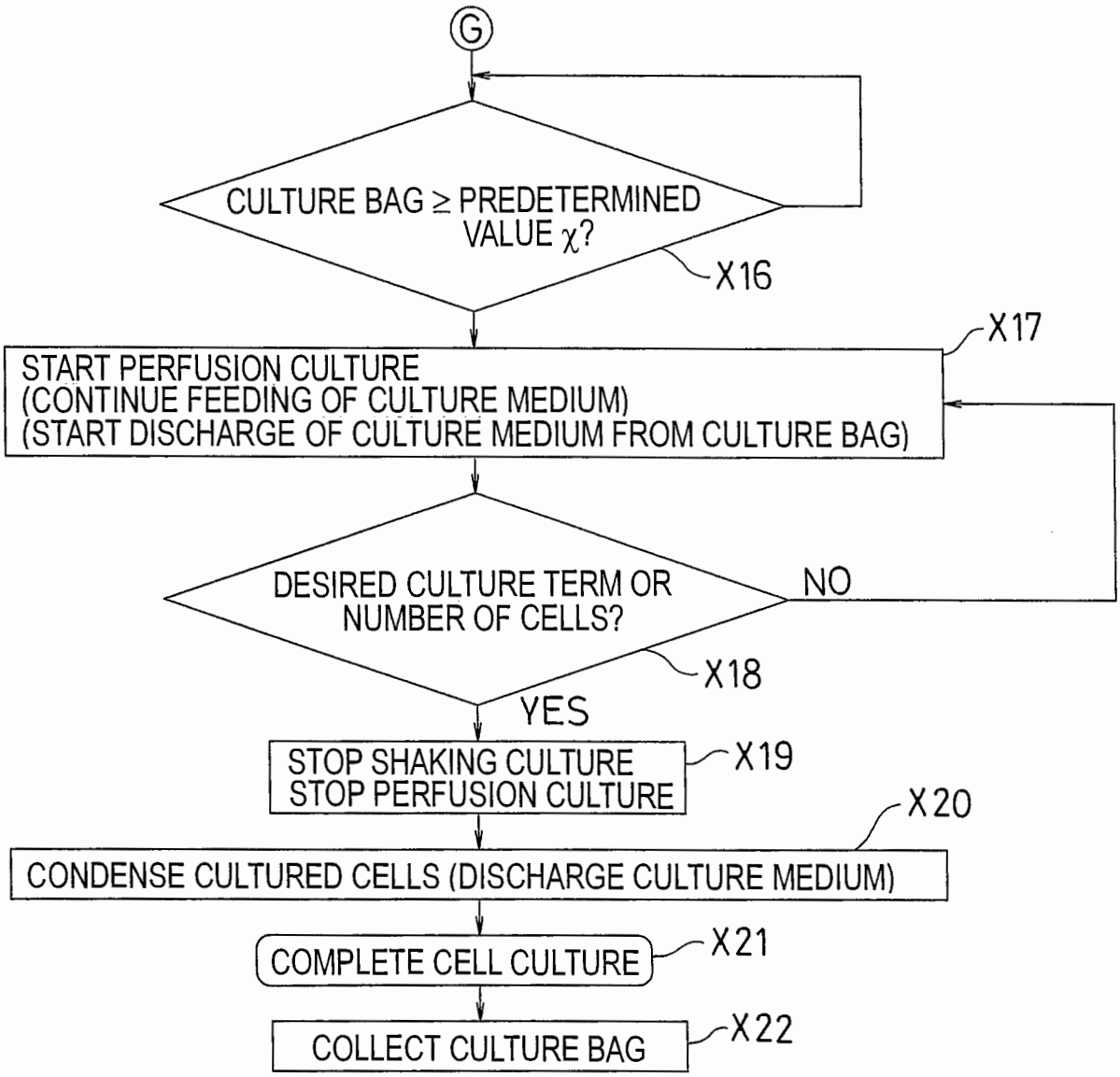
G
CULTURE BAG ≥ PREDETERMINED VALUE χ?
X16
X17
START PERFUSION CULTURE
(CONTINUE FEEDING OF CULTURE MEDIUM)
(START DISCHARGE OF CULTURE MEDIUM FROM CULTURE BAG)
DESIRED CULTURE TERM OR NUMBER OF CELLS?
NO
X18
YES
STOP SHAKING CULTURE
STOP PERFUSION CULTURE
X19
X20
CONDENSE CULTURED CELLS (DISCHARGE CULTURE MEDIUM)
COMPLETE CELL CULTURE
X21
COLLECT CULTURE BAG
X22

FIG.30

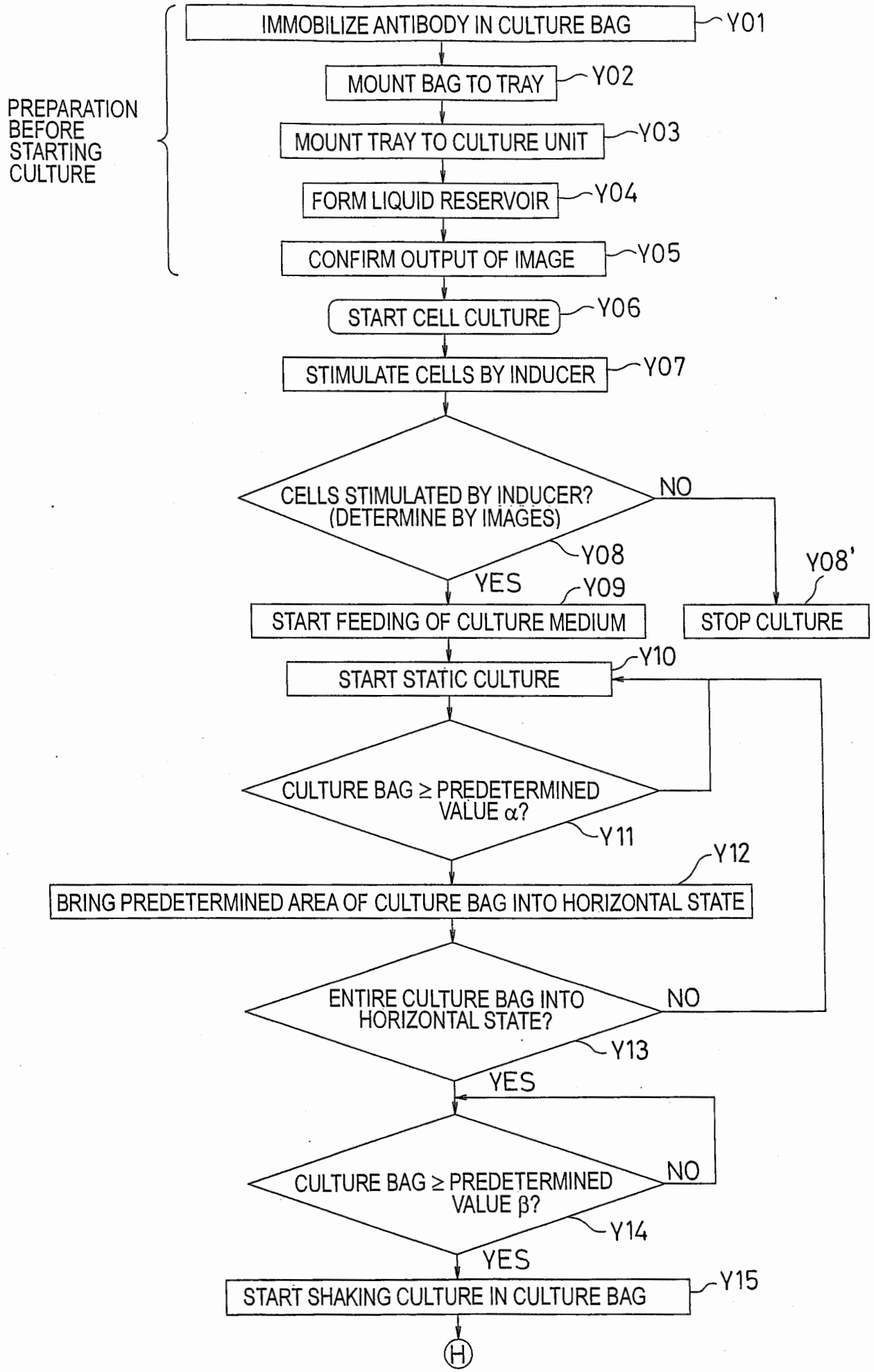
PREPARATION BEFORE STARTING CULTURE
IMMOBILIZE ANTIBODY IN CULTURE BAG
Y01
MOUNT BAG TO TRAY
Y02
MOUNT TRAY TO CULTURE UNIT
Y03
FORM LIQUID RESERVOIR
Y04
CONFIRM OUTPUT OF IMAGE
Y05
START CELL CULTURE
Y06
STIMULATE CELLS BY INDUCER
Y07
CELLS STIMULATED BY INDUCER? (DETERMINE BY IMAGES)
Y08
NO
Y08'
STOP CULTURE
YES
Y09
START FEEDING OF CULTURE MEDIUM
Y10
START STATIC CULTURE
CULTURE BAG ≥ PREDETERMINED VALUE α?
Y11
Y12
BRING PREDETERMINED AREA OF CULTURE BAG INTO HORIZONTAL STATE
ENTIRE CULTURE BAG INTO HORIZONTAL STATE?
NO
Y13
YES
CULTURE BAG ≥ PREDETERMINED VALUE β?
NO
Y14
YES
START SHAKING CULTURE IN CULTURE BAG
Y15
H

FIG.31

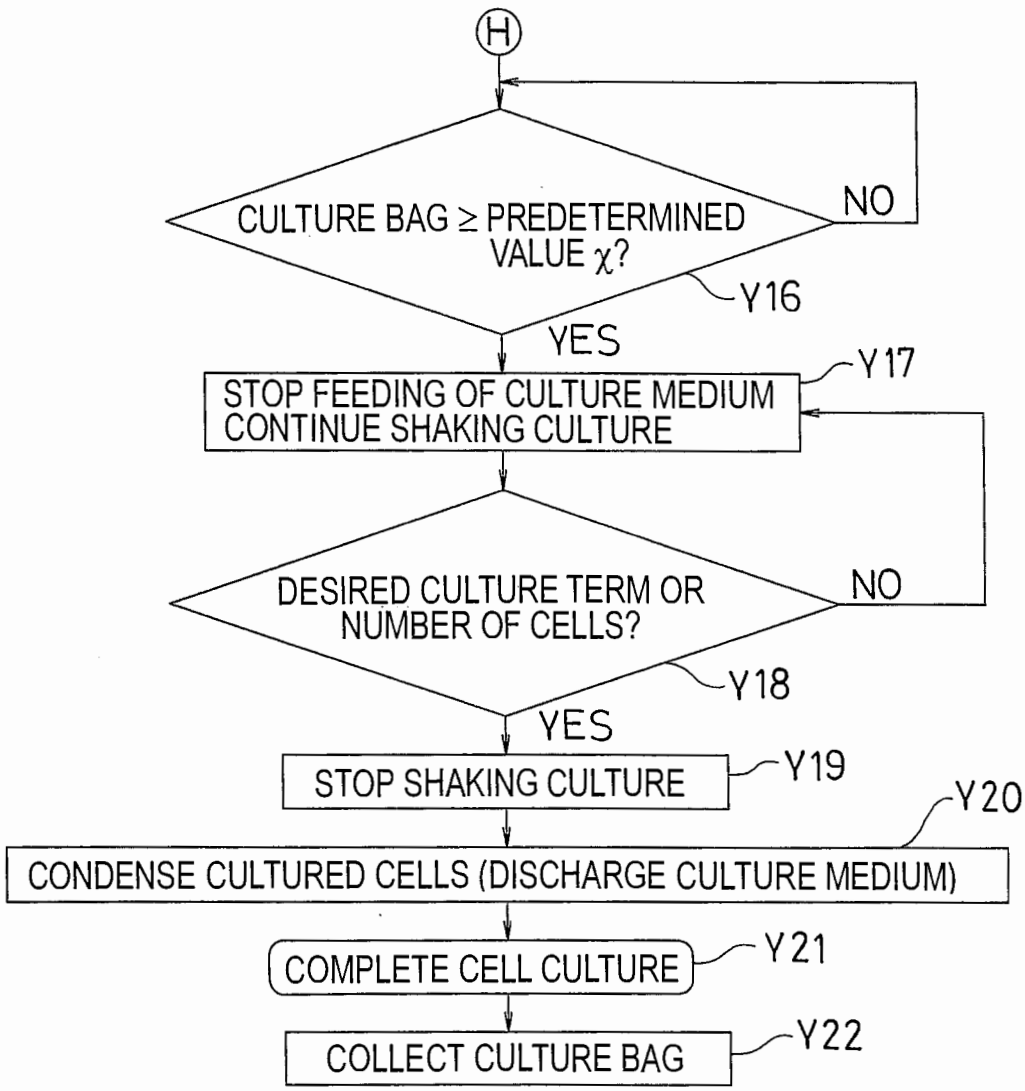
H
CULTURE BAG ≥ PREDETERMINED VALUE χ?
NO
Y16
YES
STOP FEEDING OF CULTURE MEDIUM CONTINUE SHAKING CULTURE
Y17
DESIRED CULTURE TERM OR NUMBER OF CELLS?
NO
Y18
YES
STOP SHAKING CULTURE
Y19
Y20
CONDENSE CULTURED CELLS (DISCHARGE CULTURE MEDIUM)
COMPLETE CELL CULTURE
Y21
COLLECT CULTURE BAG
Y22

FIG.32

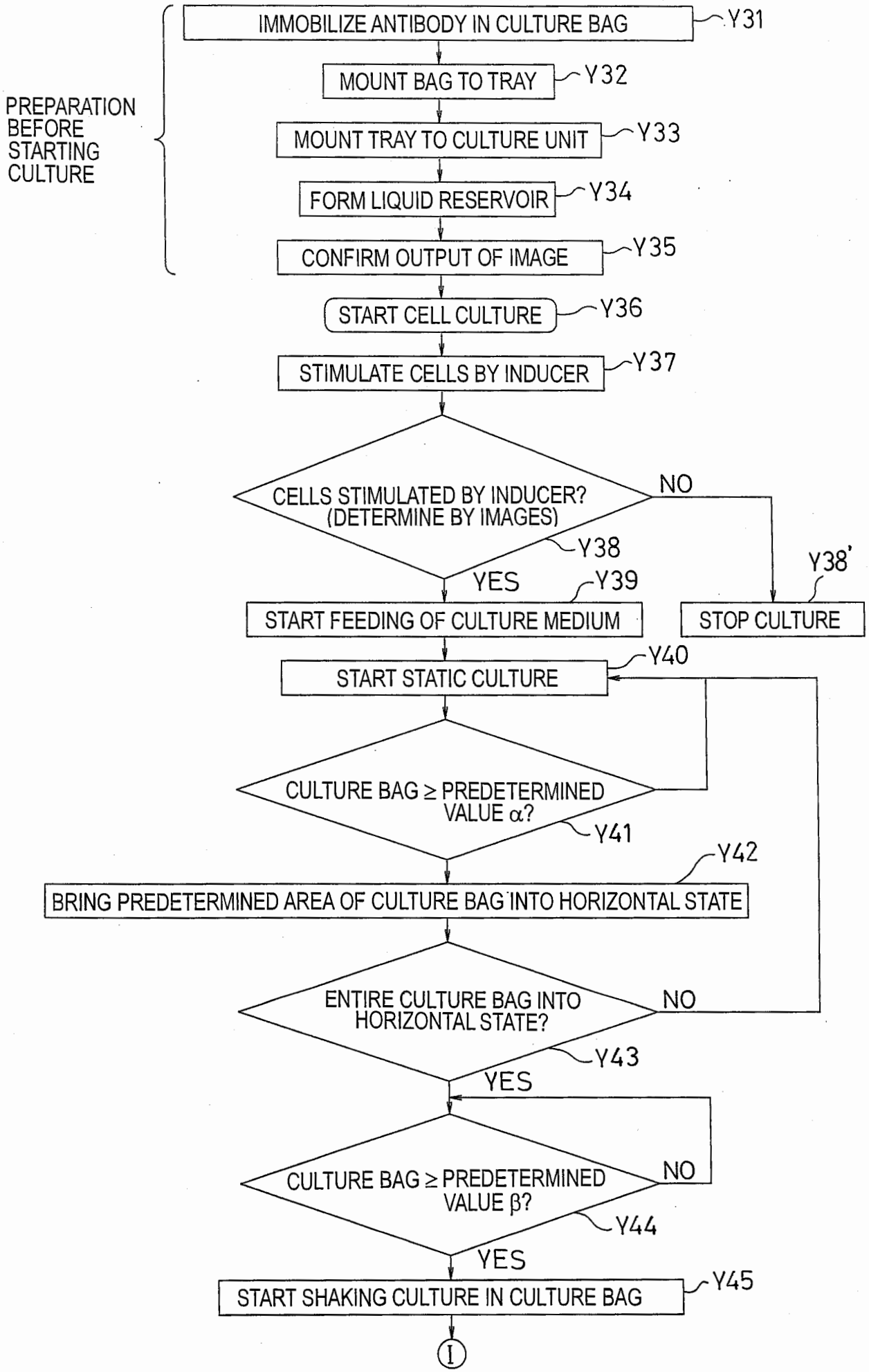
PREPARATION BEFORE STARTING CULTURE
IMMOBILIZE ANTIBODY IN CULTURE BAG
Y31
MOUNT BAG TO TRAY
Y32
MOUNT TRAY TO CULTURE UNIT
Y33
FORM LIQUID RESERVOIR
Y34
CONFIRM OUTPUT OF IMAGE
Y35
START CELL CULTURE
Y36
STIMULATE CELLS BY INDUCER
Y37
CELLS STIMULATED BY INDUCER? (DETERMINE BY IMAGES)
Y38
NO
YES
Y39
START FEEDING OF CULTURE MEDIUM
Y38'
STOP CULTURE
START STATIC CULTURE
Y40
CULTURE BAG ≥ PREDETERMINED VALUE α?
Y41
BRING PREDETERMINED AREA OF CULTURE BAG INTO HORIZONTAL STATE
Y42
ENTIRE CULTURE BAG INTO HORIZONTAL STATE?
Y43
NO
YES
CULTURE BAG ≥ PREDETERMINED VALUE β?
Y44
NO
YES
START SHAKING CULTURE IN CULTURE BAG
Y45
I

FIG.33

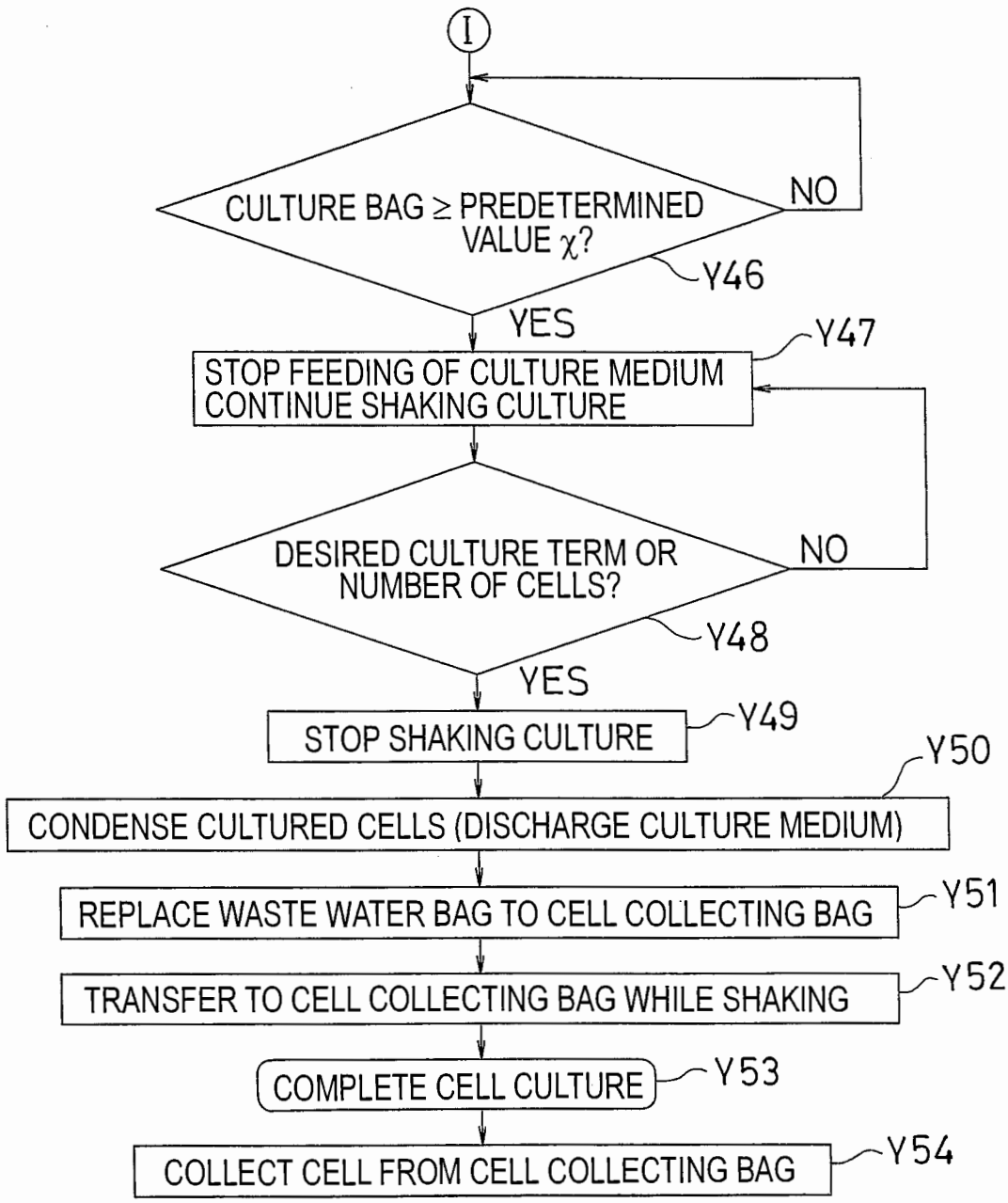
I
CULTURE BAG ≥ PREDETERMINED VALUE χ?
NO
Y46
YES
Y47
STOP FEEDING OF CULTURE MEDIUM
CONTINUE SHAKING CULTURE
DESIRED CULTURE TERM OR NUMBER OF CELLS?
NO
Y48
YES
STOP SHAKING CULTURE
Y49
Y50
CONDENSE CULTURED CELLS (DISCHARGE CULTURE MEDIUM)
REPLACE WASTE WATER BAG TO CELL COLLECTING BAG
Y51
TRANSFER TO CELL COLLECTING BAG WHILE SHAKING
Y52
COMPLETE CELL CULTURE
Y53
COLLECT CELL FROM CELL COLLECTING BAG
Y54

FIG.34

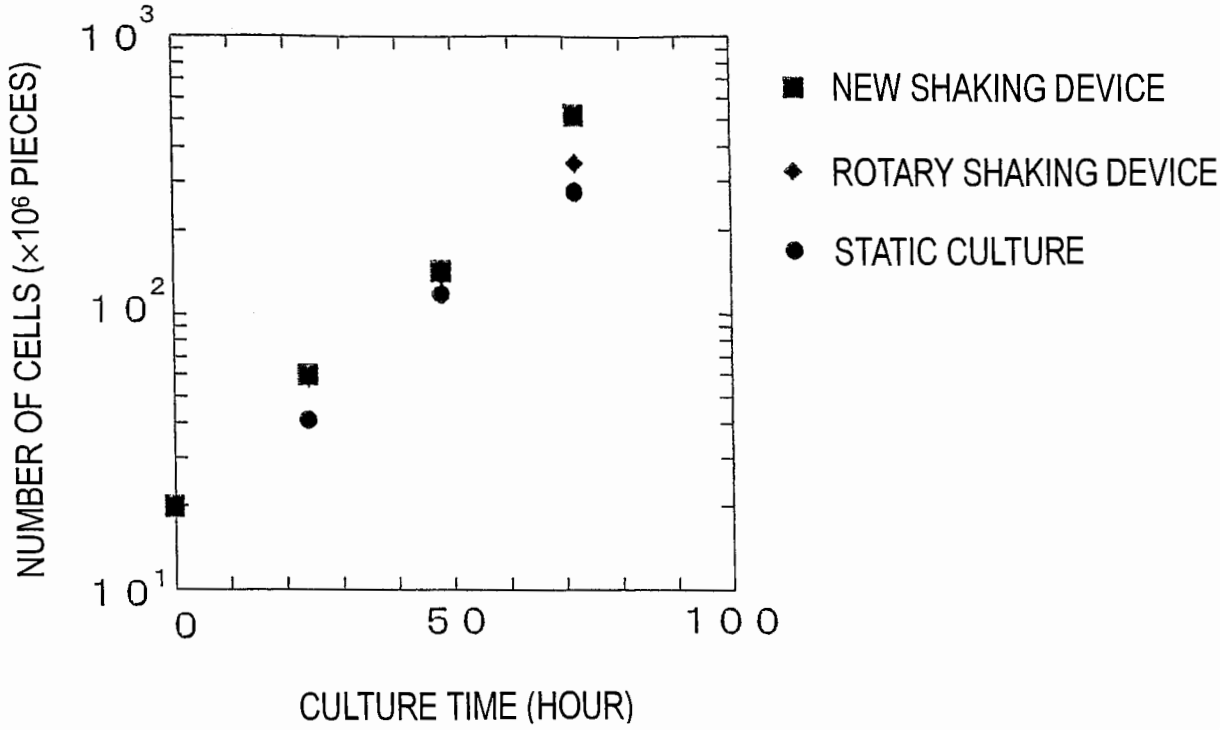
NUMBER OF CELLS (×10⁶ PIECES)
10³
10²
10¹
0
50
100
CULTURE TIME (HOUR)
NEW SHAKING DEVICE
ROTARY SHAKING DEVICE
STATIC CULTURE

FIG.35