FIG.1

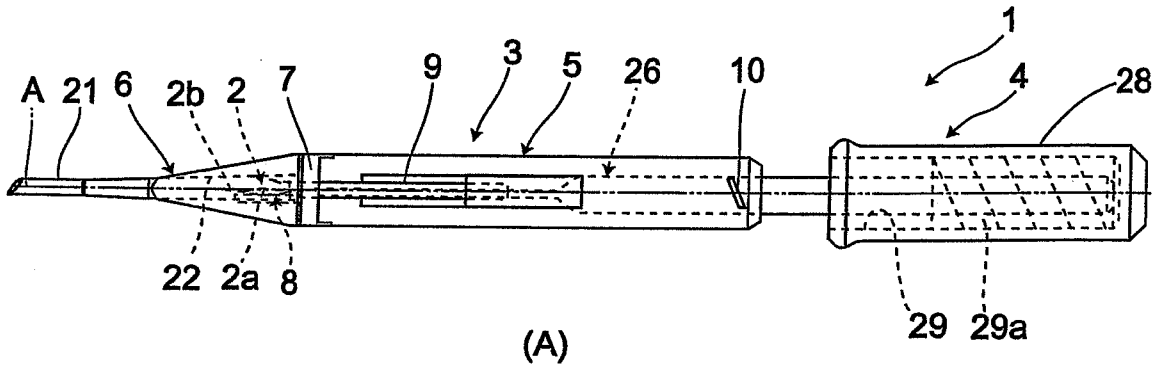
A
21
6
2b
2
7
9
3
5
26
10
1
4
28
22
2a
8
29
29a

(A)

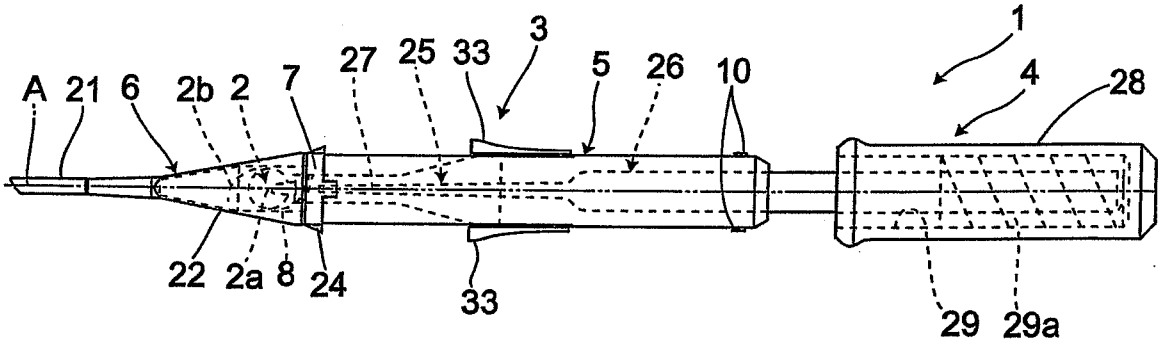
A
21
6
2b
2
7
27
25
33
3
5
26
10
1
4
28
22
2a
8
24
33
29
29a

(B)

FIG.2

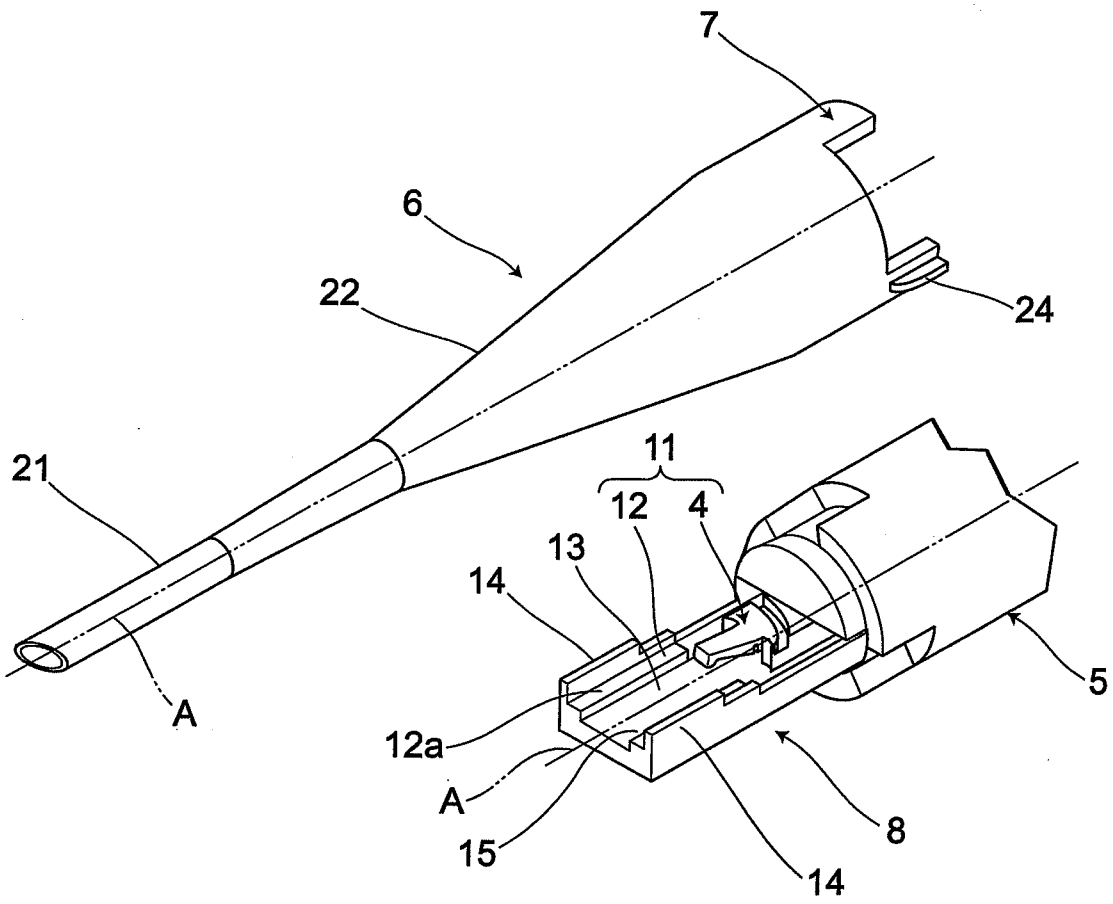

FIG.3

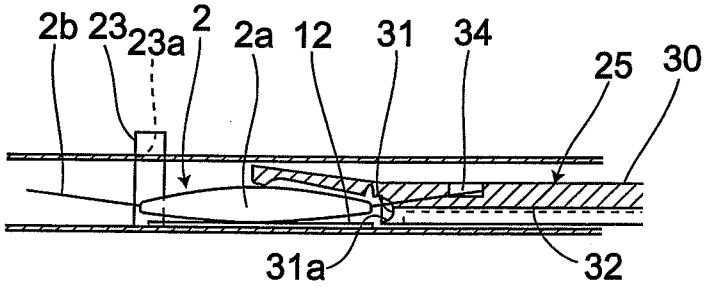

(A)

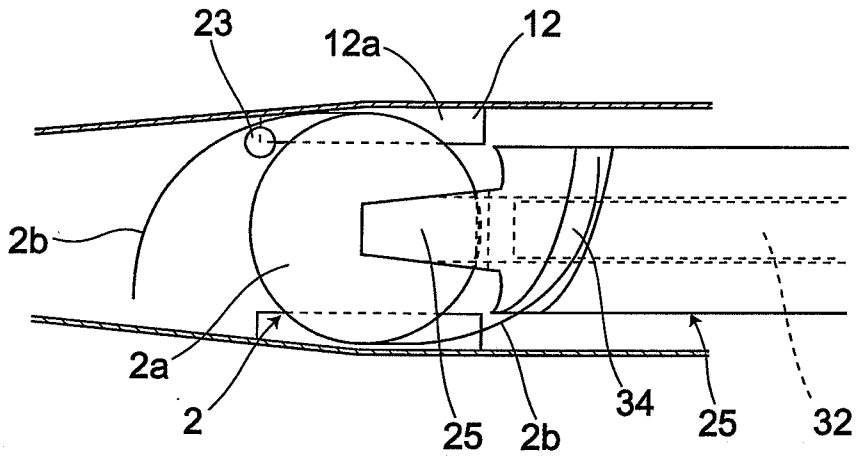

(B)

FIG.4

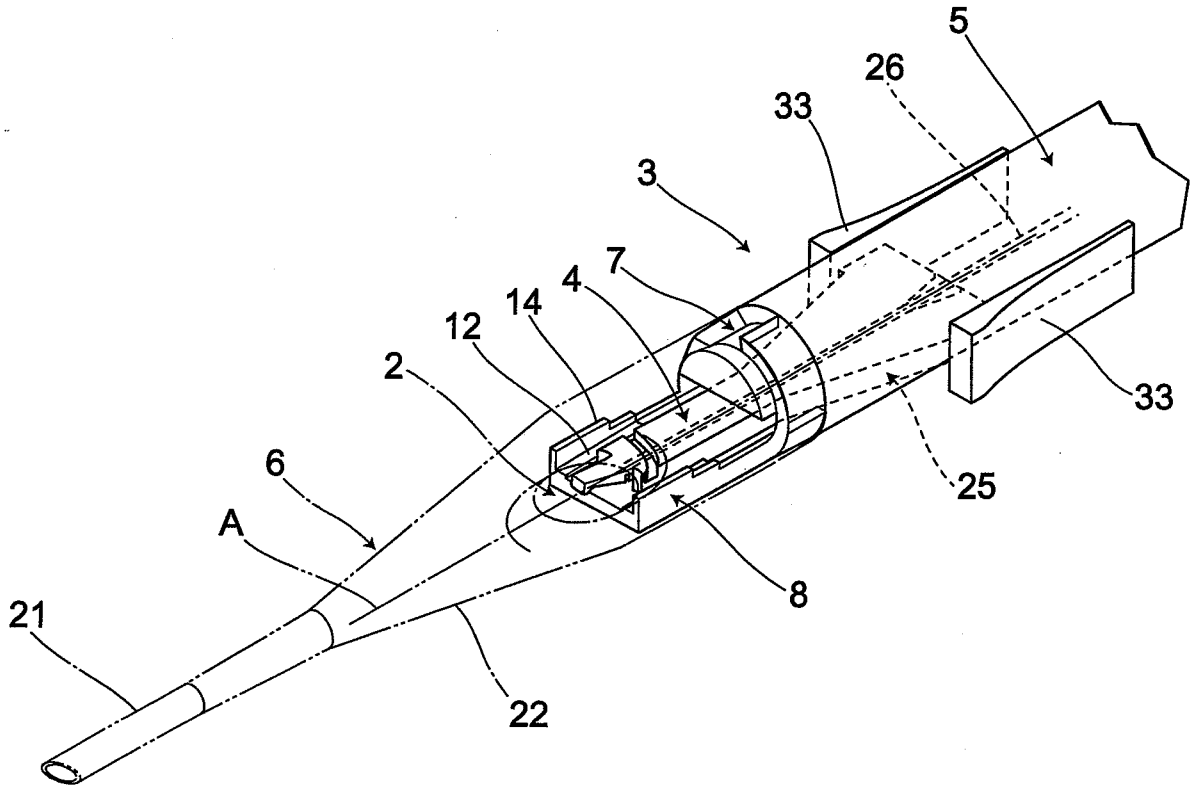

FIG.5

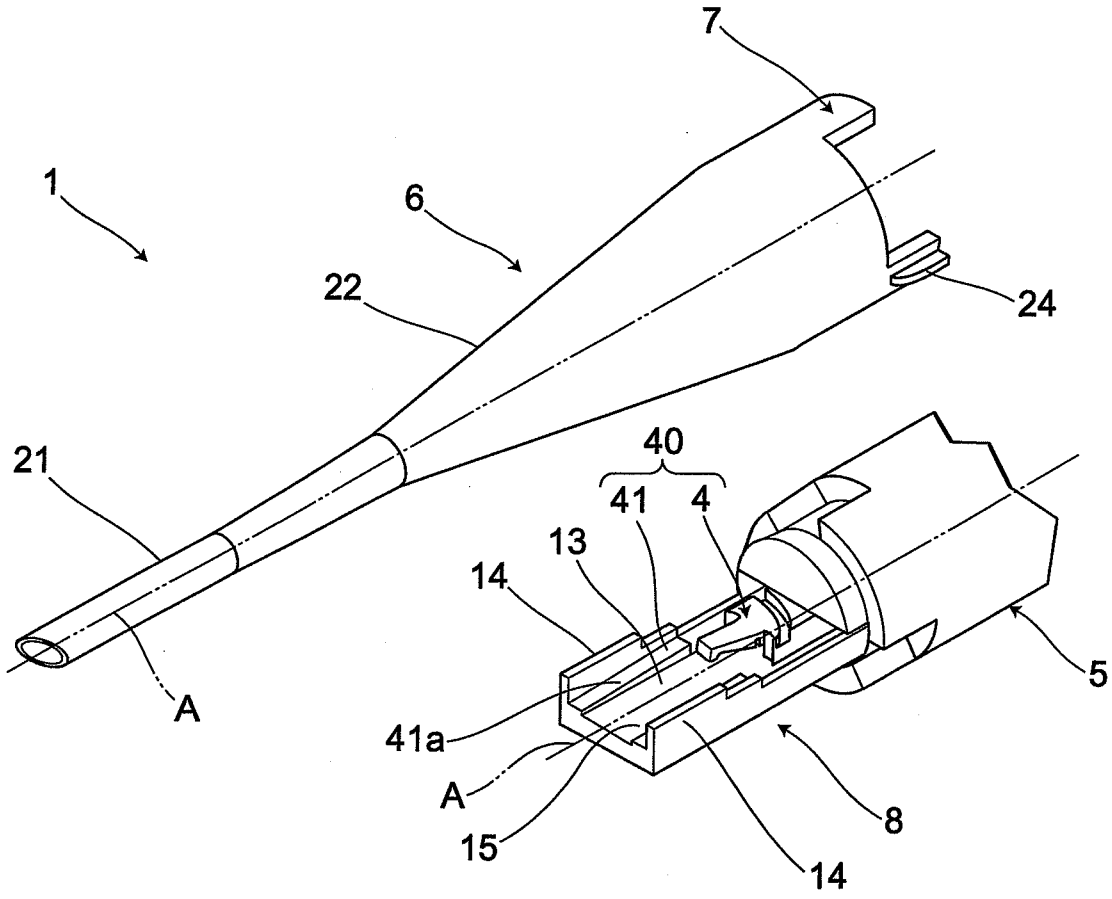

FIG.6

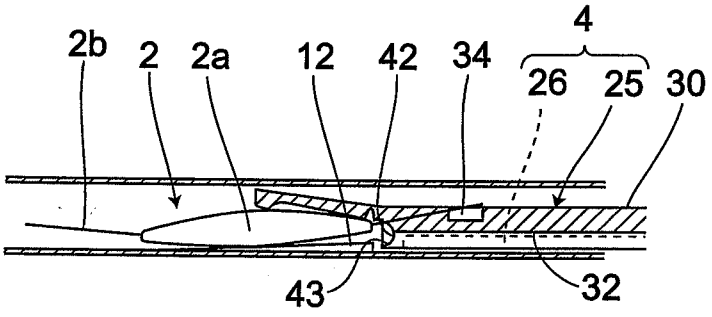

(A)

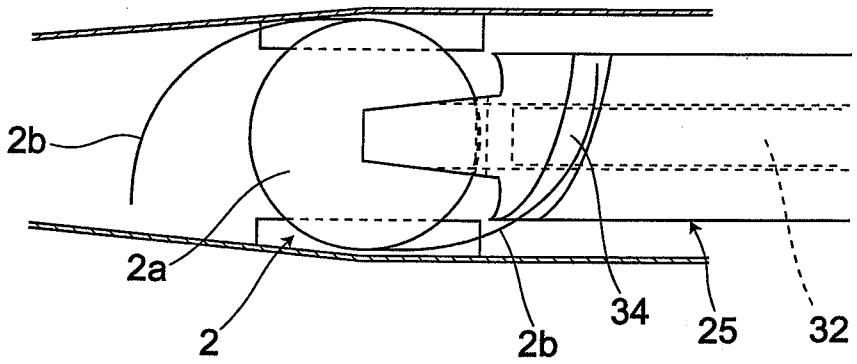

(B)

FIG.7

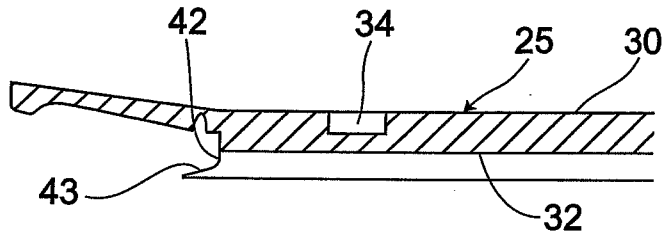

(A)

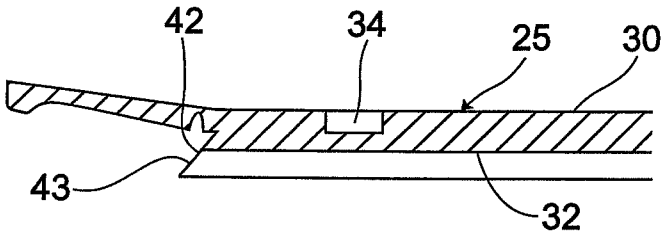

(B)

FIG.8

