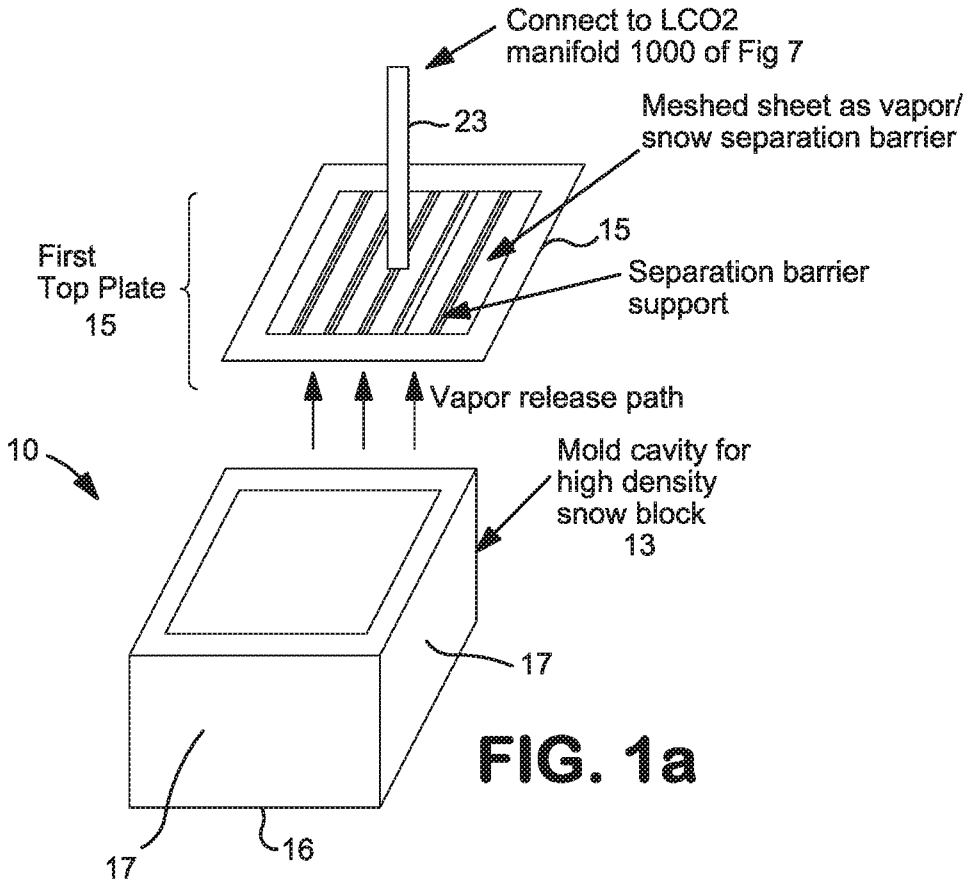
Connect to LCO2
manifold 1000 of Fig 7
23
Meshed sheet as vapor/
snow separation barrier
15
First
Top Plate
15
Separation barrier
support
Vapor release path
10
Mold cavity for
high density
snow block
13
17
17
16

FIG. 1a

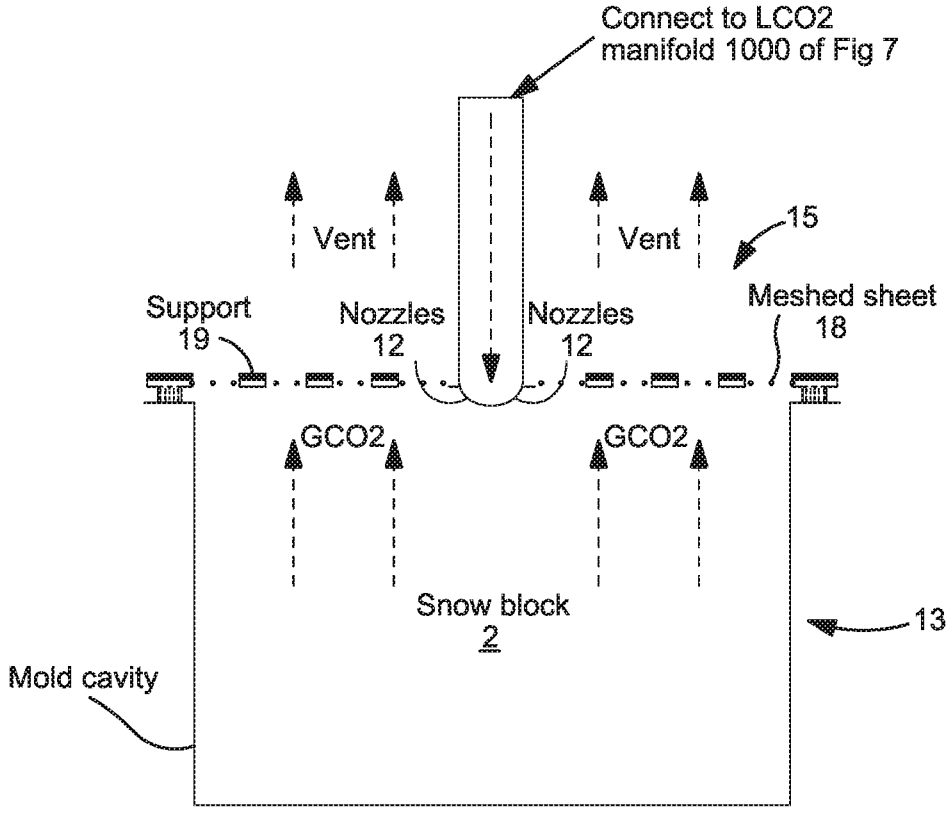
Connect to LCO2
manifold 1000 of Fig 7
Vent
Vent
15
Support
19
Nozzles
12
Nozzles
12
Meshed sheet
18
GCO2
GCO2
Snow block
2
13
Mold cavity

FIG. 1b

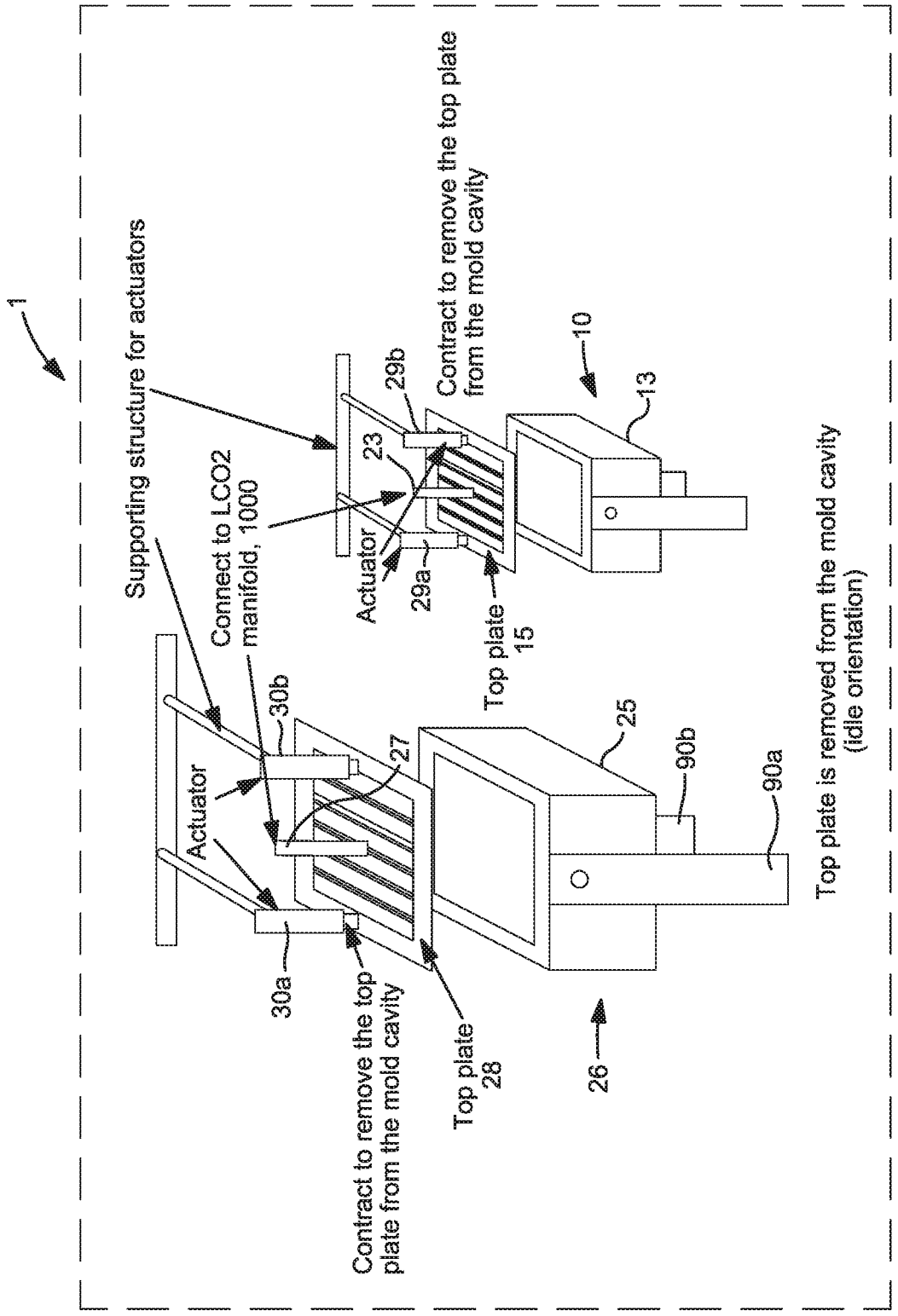
1
Supporting structure for actuators
Connect to LCO2 manifold, 1000
Actuator
30b
30a
Contract to remove the top plate from the mold cavity
Top plate 28
26
27
Actuator
23
29b
29a
Contract to remove the top plate from the mold cavity
Top plate 15
10
13
25
90b
90a
Top plate is removed from the mold cavity (idle orientation)

FIG. 2a

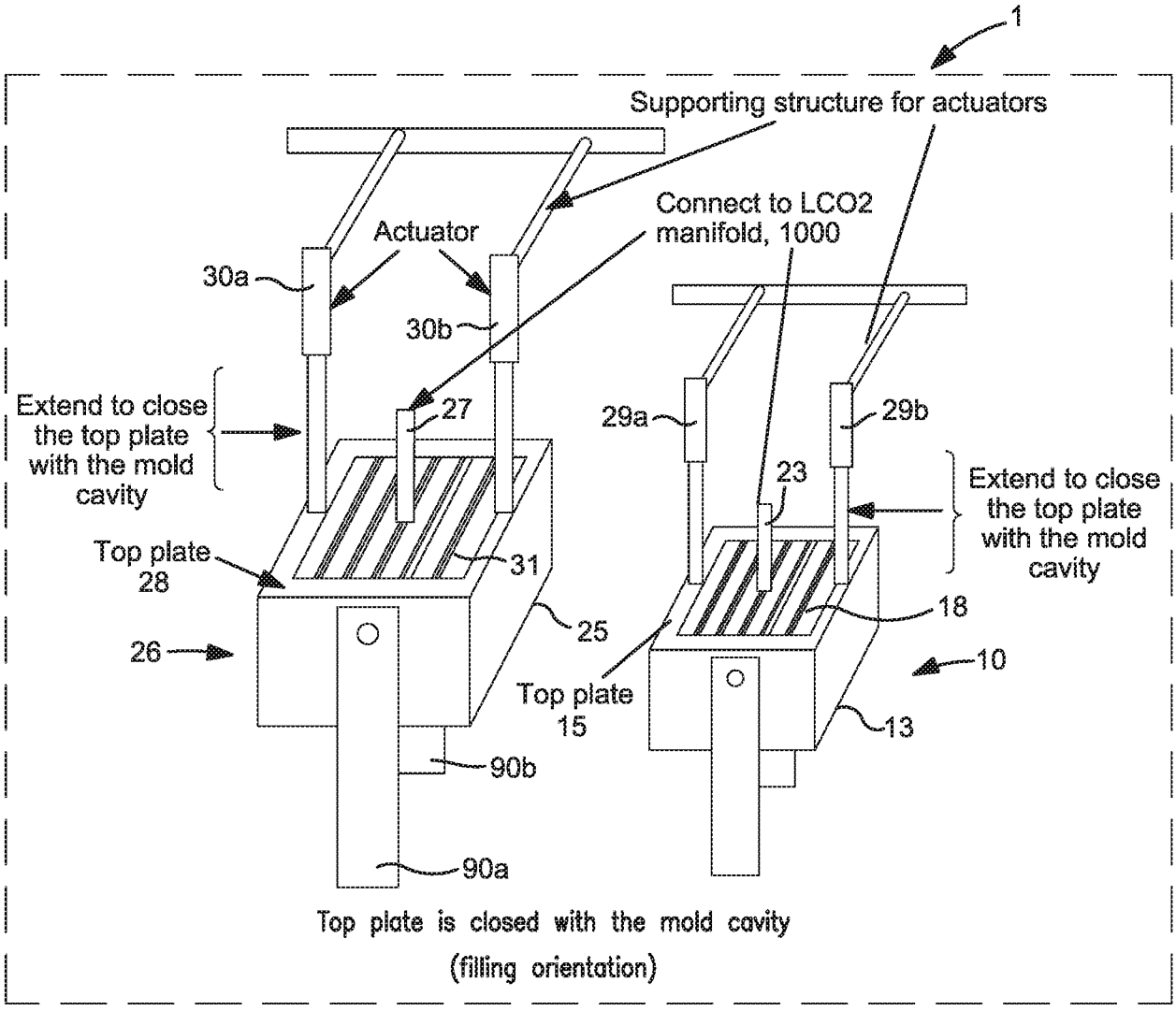
1
Supporting structure for actuators
Connect to LCO2 manifold, 1000
Actuator
30a
30b
Extend to close the top plate with the mold cavity
27
29a
29b
23
Extend to close the top plate with the mold cavity
Top plate 28
31
18
25
26
10
Top plate 15
13
90b
90a
Top plate is closed with the mold cavity
(filling orientation)

FIG. 2b

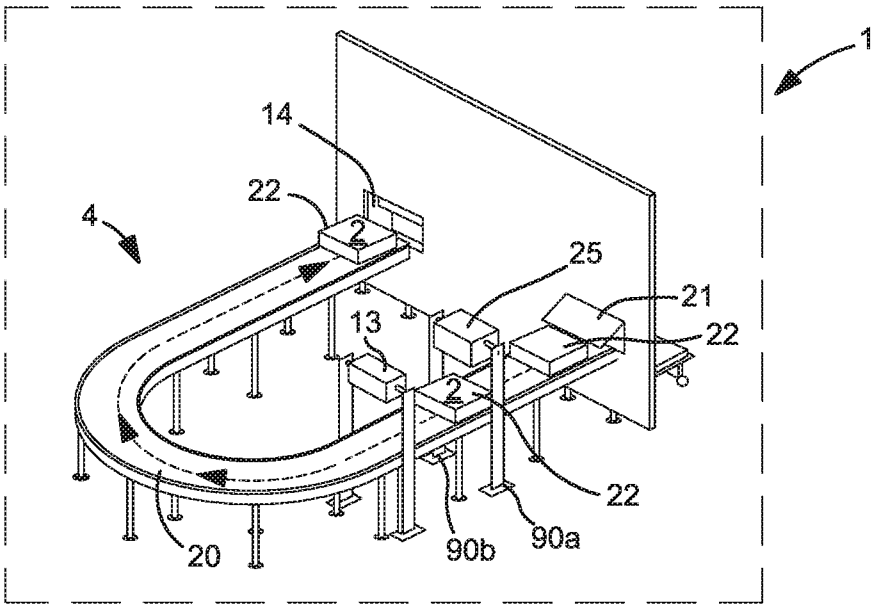
1
14
22
4
2
25
21
13
22
2
22
20
90b
90a

FIG. 4

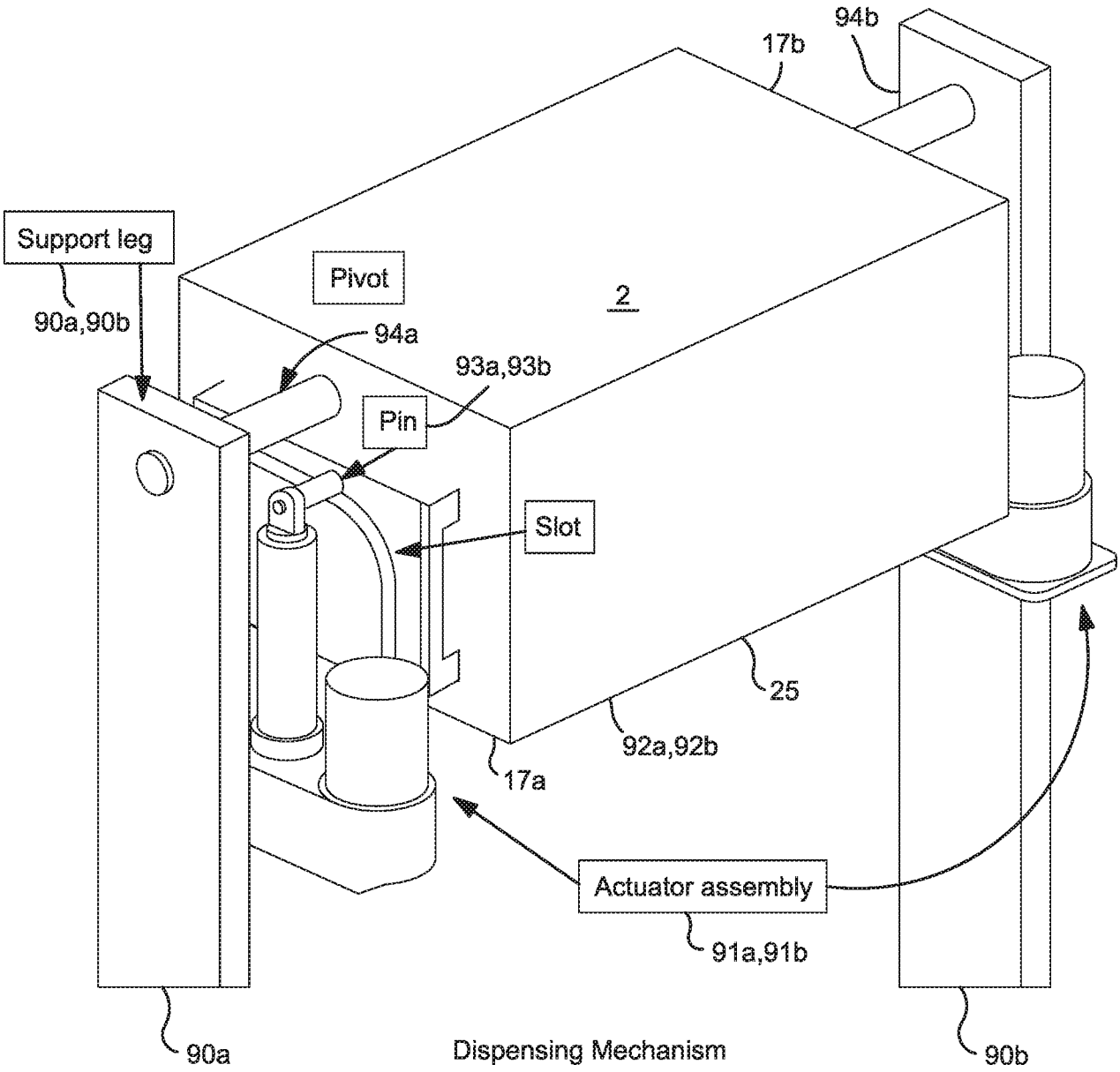
94b
17b
Support leg
90a,90b
Pivot
2
94a
93a,93b
Pin
Slot
25
92a,92b
17a
Actuator assembly
91a,91b
90a
Dispensing Mechanism
90b

FIG. 3

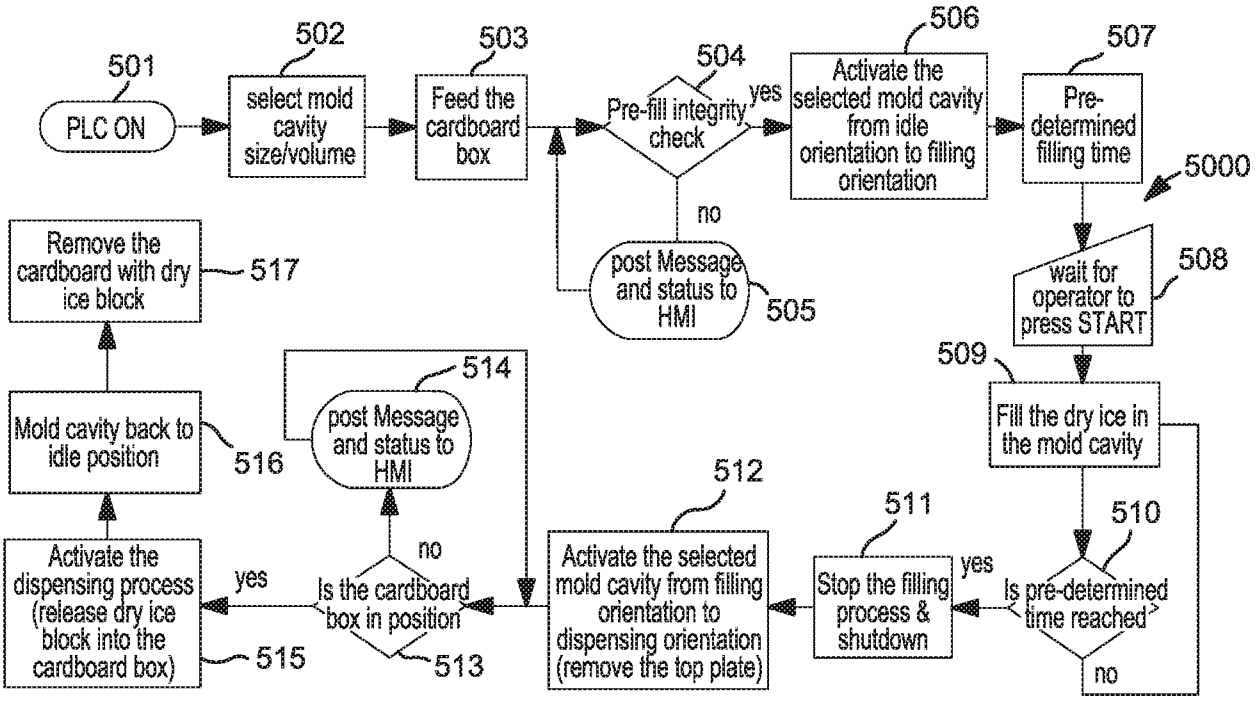
501
PLC ON
502
select mold cavity size/volume
503
Feed the cardboard box
504
Pre-fill integrity check
yes
no
505
post Message and status to HMI
506
Activate the selected mold cavity from idle orientation to filling orientation
507
Pre-determined filling time
5000
508
wait for operator to press START
509
Fill the dry ice in the mold cavity
510
Is pre-determined time reached
yes
no
511
Stop the filling process & shutdown
512
Activate the selected mold cavity from filling orientation to dispensing orientation (remove the top plate)
513
Is the cardboard box in position
yes
no
514
post Message and status to HMI
515
Activate the dispensing process (release dry ice block into the cardboard box)
516
Mold cavity back to idle position
517
Remove the cardboard with dry ice block

FIG. 5

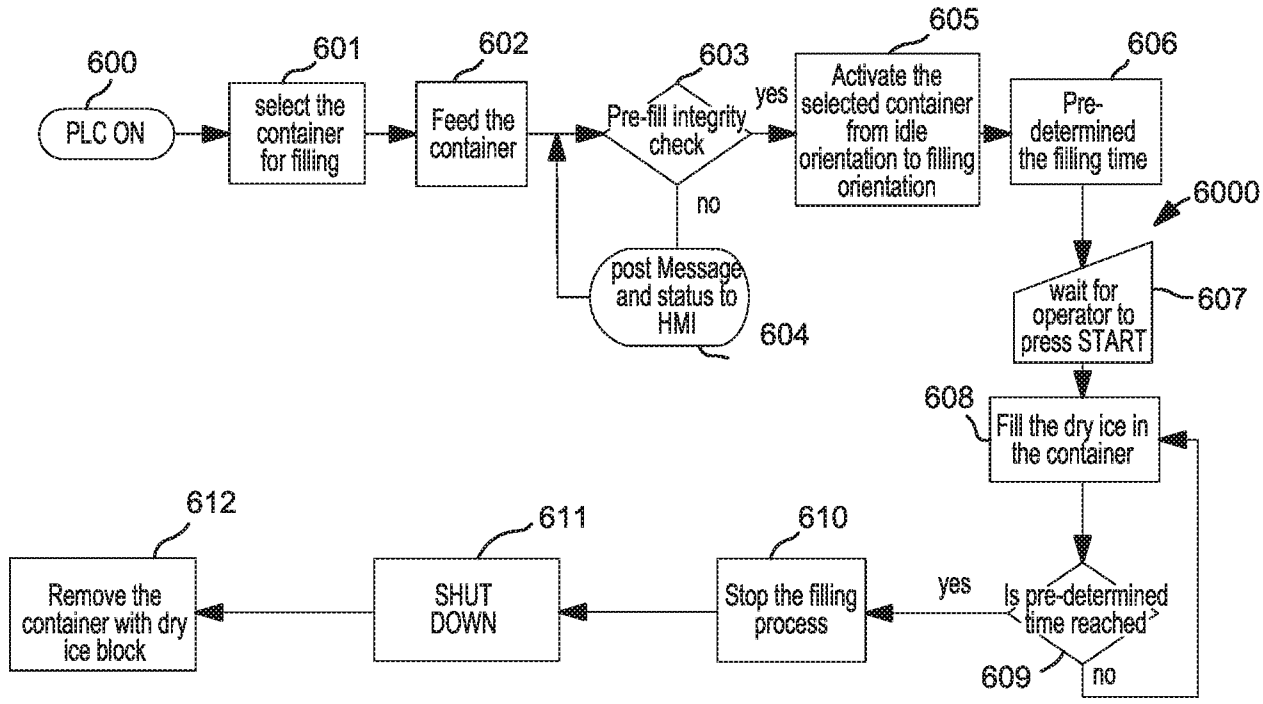
600
PLC ON
601
select the container for filling
602
Feed the container
603
Pre-fill integrity check
yes
no
604
post Message and status to HMI
605
Activate the selected container from idle orientation to filling orientation
606
Pre-determined the filling time
6000
607
wait for operator to press START
608
Fill the dry ice in the container
609
Is pre-determined time reached
yes
no
610
Stop the filling process
611
SHUT DOWN
612
Remove the container with dry ice block

FIG. 6

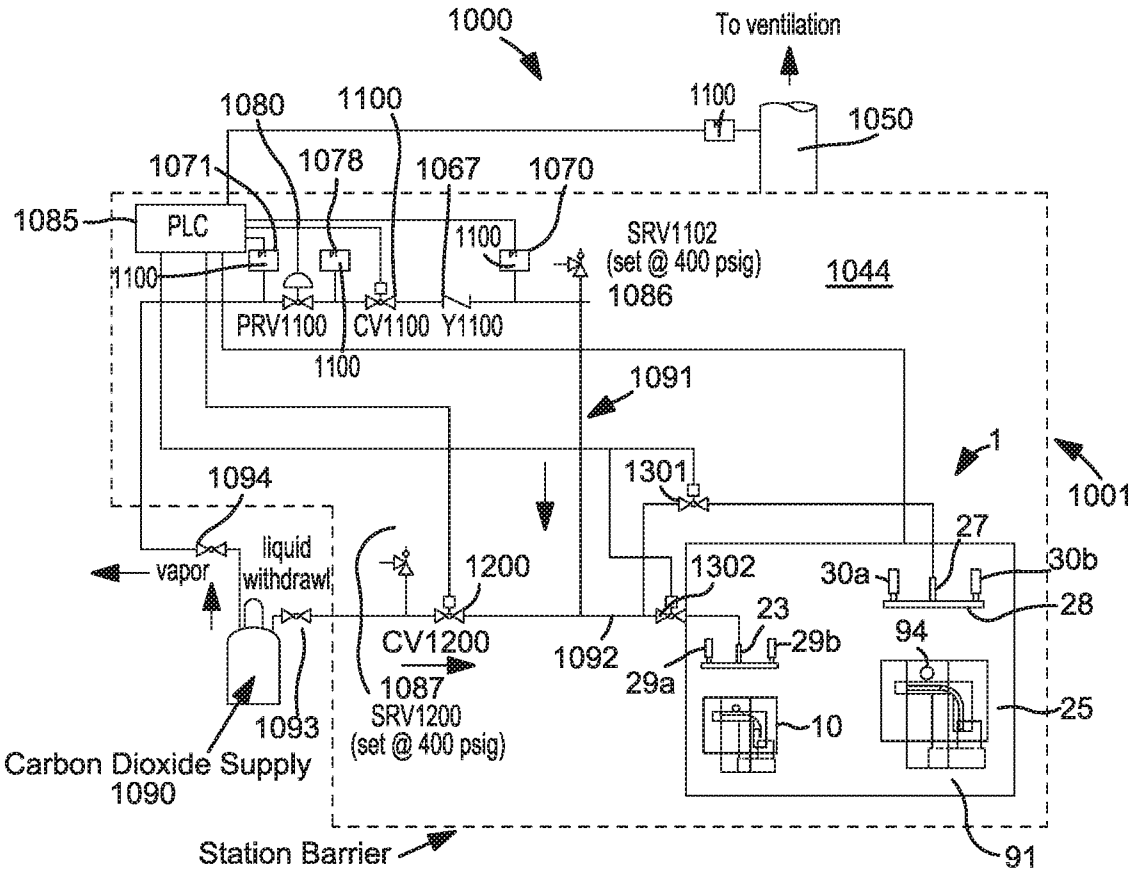
1000
To ventilation
1080
1100
1100
1050
1071
1078
1067
1070
1085
PLC
1100
SRV1102
(set @ 400 psig)
1086
1044
1100
PRV1100
CV1100
Y1100
1100
1091
1
1001
1094
1301
27
liquid
withdrawl
vapor
1200
1302
30a
30b
23
28
CV1200
1092
29b
94
29a
1087
SRV1200
(set @ 400 psig)
10
25
1093
Carbon Dioxide Supply
1090
Station Barrier
91

FIG. 7

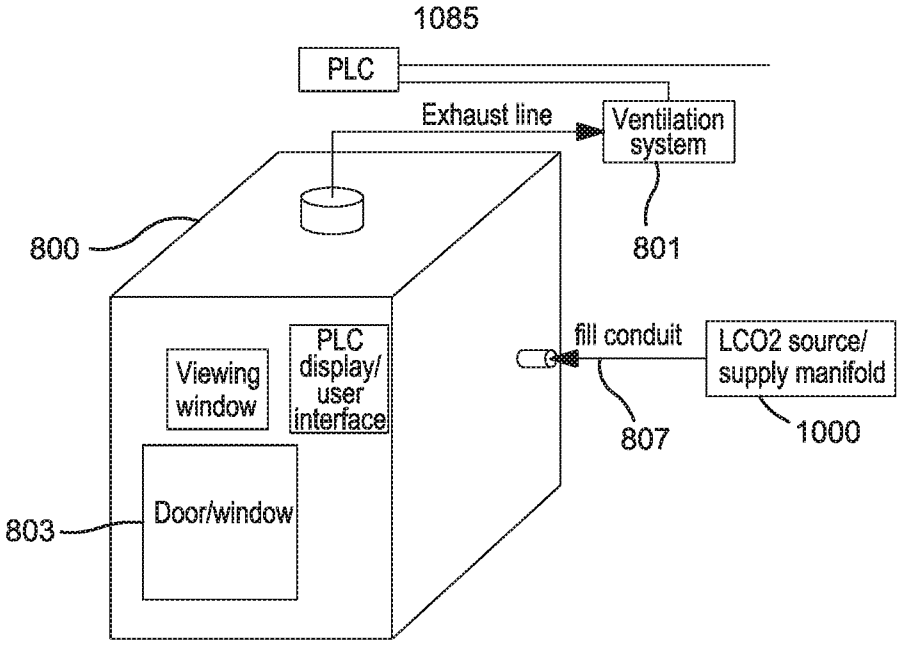
1085
PLC
Exhaust line
Ventilation
system
800
801
PLC
display/
user
interface
Viewing
window
fill conduit
LCO2 source/
supply manifold
807
1000
Door/window
803

FIG. 8

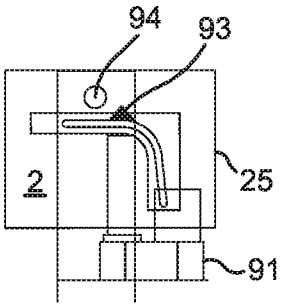

Step 1: beginning of the dispensing process

FIG. 9a

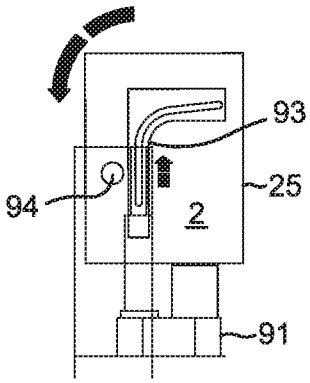

Step 2: intermediate step of the dispensing process

FIG. 9b

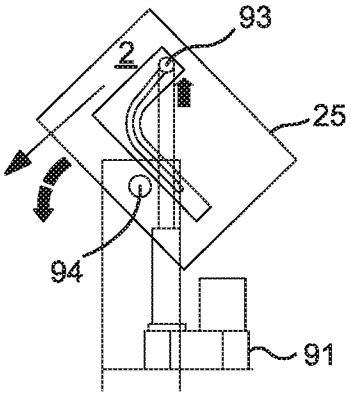

Step 3: end of the dispensing process

FIG. 9c