Fig. 1

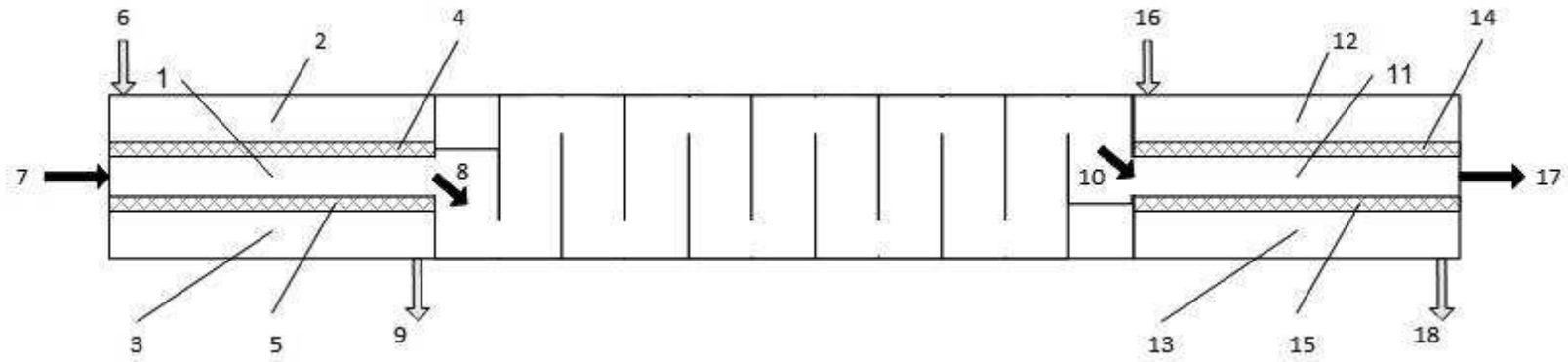

Fig. 2

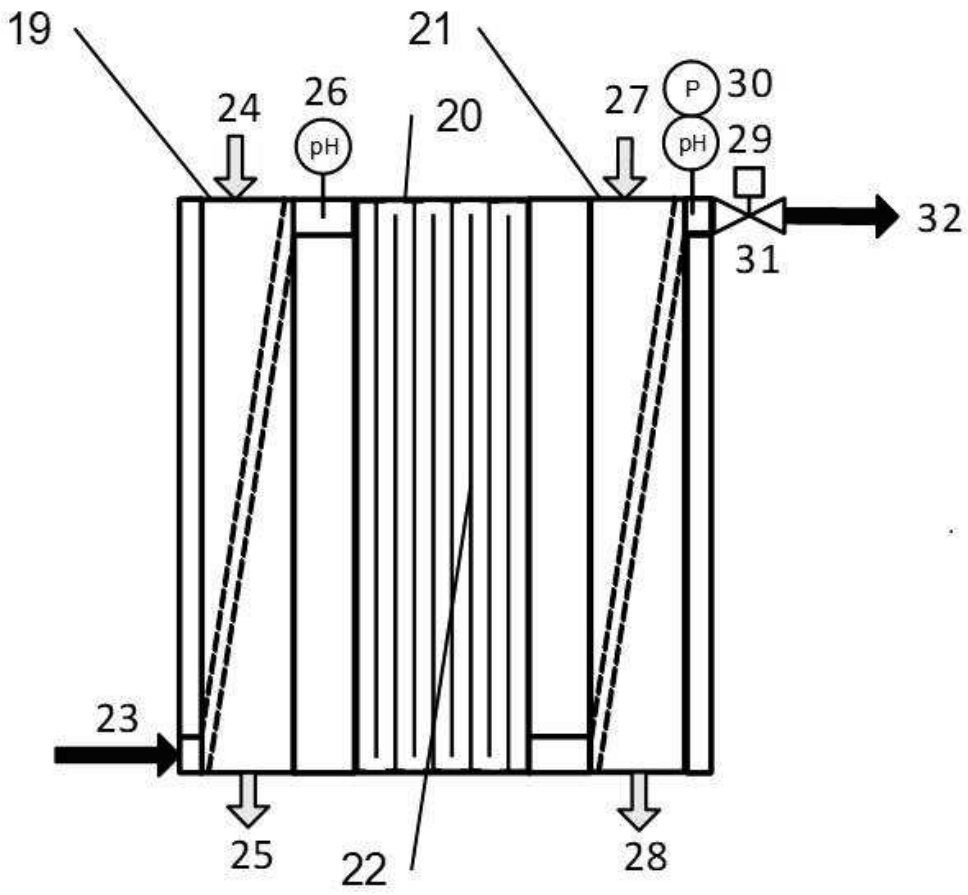

Fig. 3

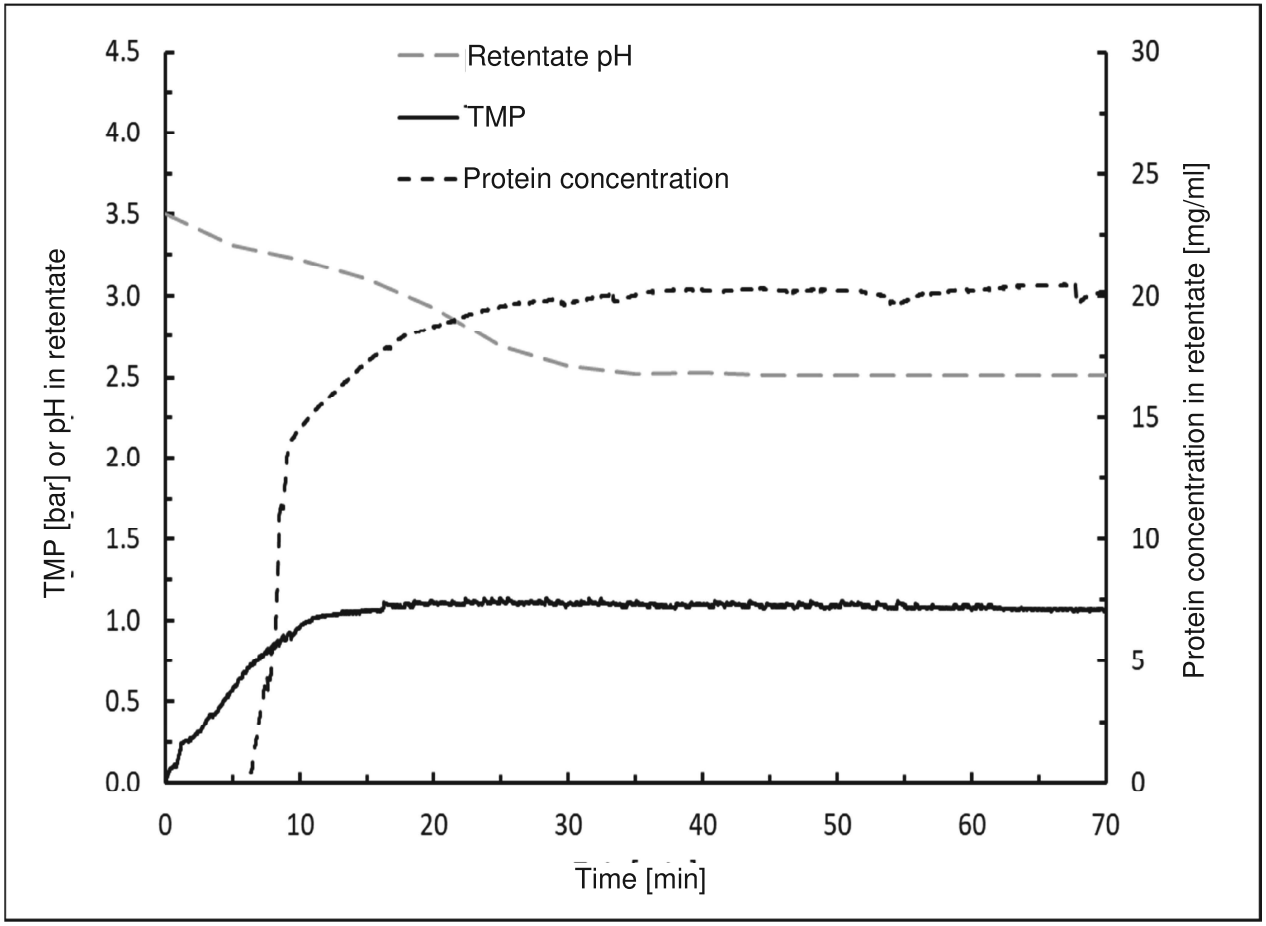
Retentate pH
TMP
Protein concentration
TMP [bar] or pH in retentate
Protein concentration in retentate [mg/ml]
Time [min]
4.5
4.0
3.5
3.0
2.5
2.0
1.5
1.0
0.5
0.0
30
25
20
15
10
5
0
0
10
20
30
40
50
60
70