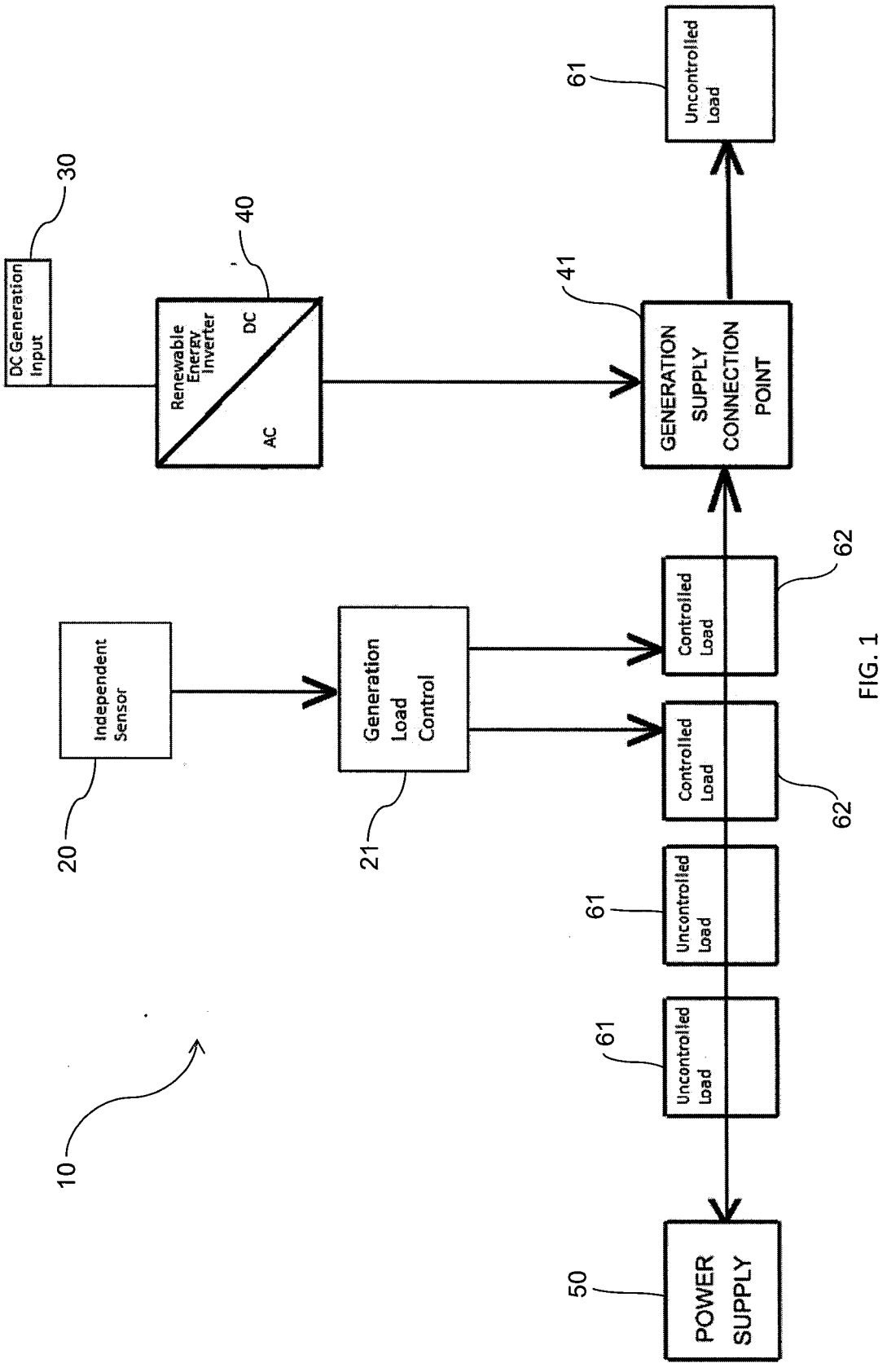
10
20
Independent Sensor
21
Generation Load Control
30
DC Generation Input
40
Renewable Energy Inverter
DC
AC
41
GENERATION SUPPLY CONNECTION POINT
50
POWER SUPPLY
61
Uncontrolled Load
61
Uncontrolled Load
61
Uncontrolled Load
62
Controlled Load
62
Controlled Load

FIG. 1

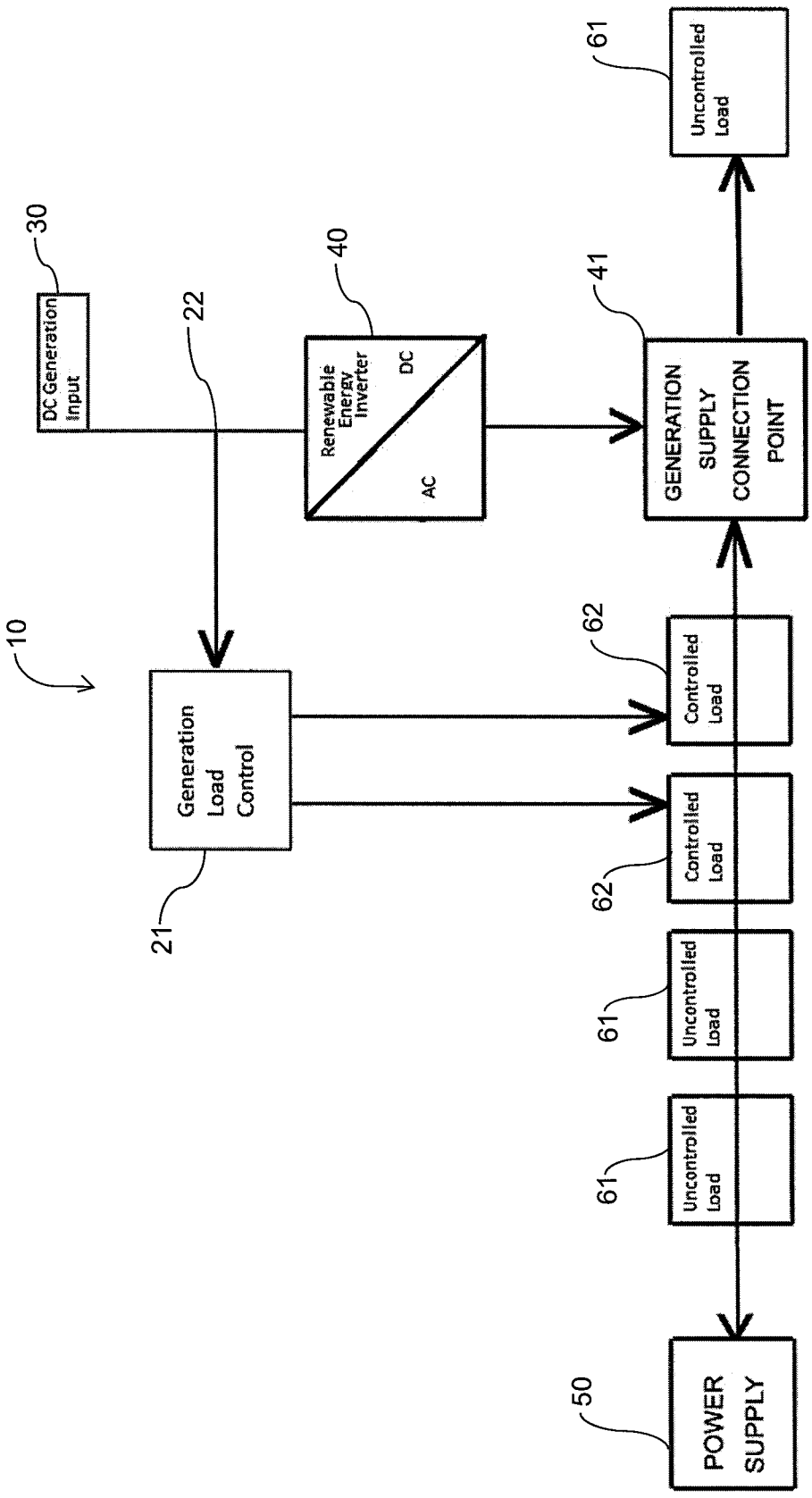
10
21
22
30
40
41
50
61
62
DC Generation Input
Renewable Energy Inverter
DC
AC
GENERATION SUPPLY CONNECTION POINT
Generation Load Control
Uncontrolled Load
Controlled Load
POWER SUPPLY

FIG. 2

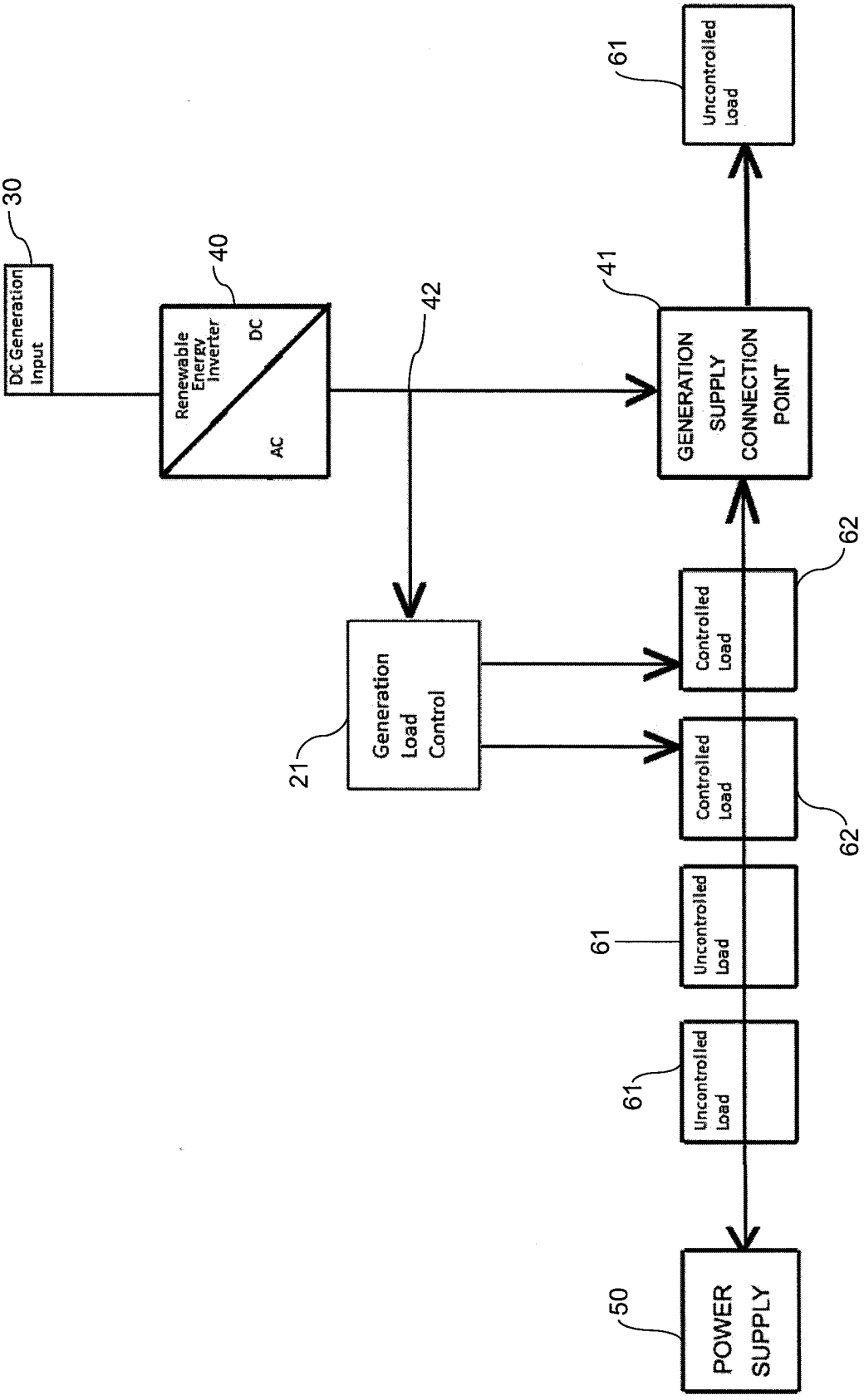
30
DC Generation Input
40
Renewable Energy Inverter
DC
AC
42
41
GENERATION SUPPLY CONNECTION POINT
61
Uncontrolled Load
21
Generation Load Control
Controlled Load
62
Controlled Load
62
61
Uncontrolled Load
61
Uncontrolled Load
50
POWER SUPPLY

FIG. 3

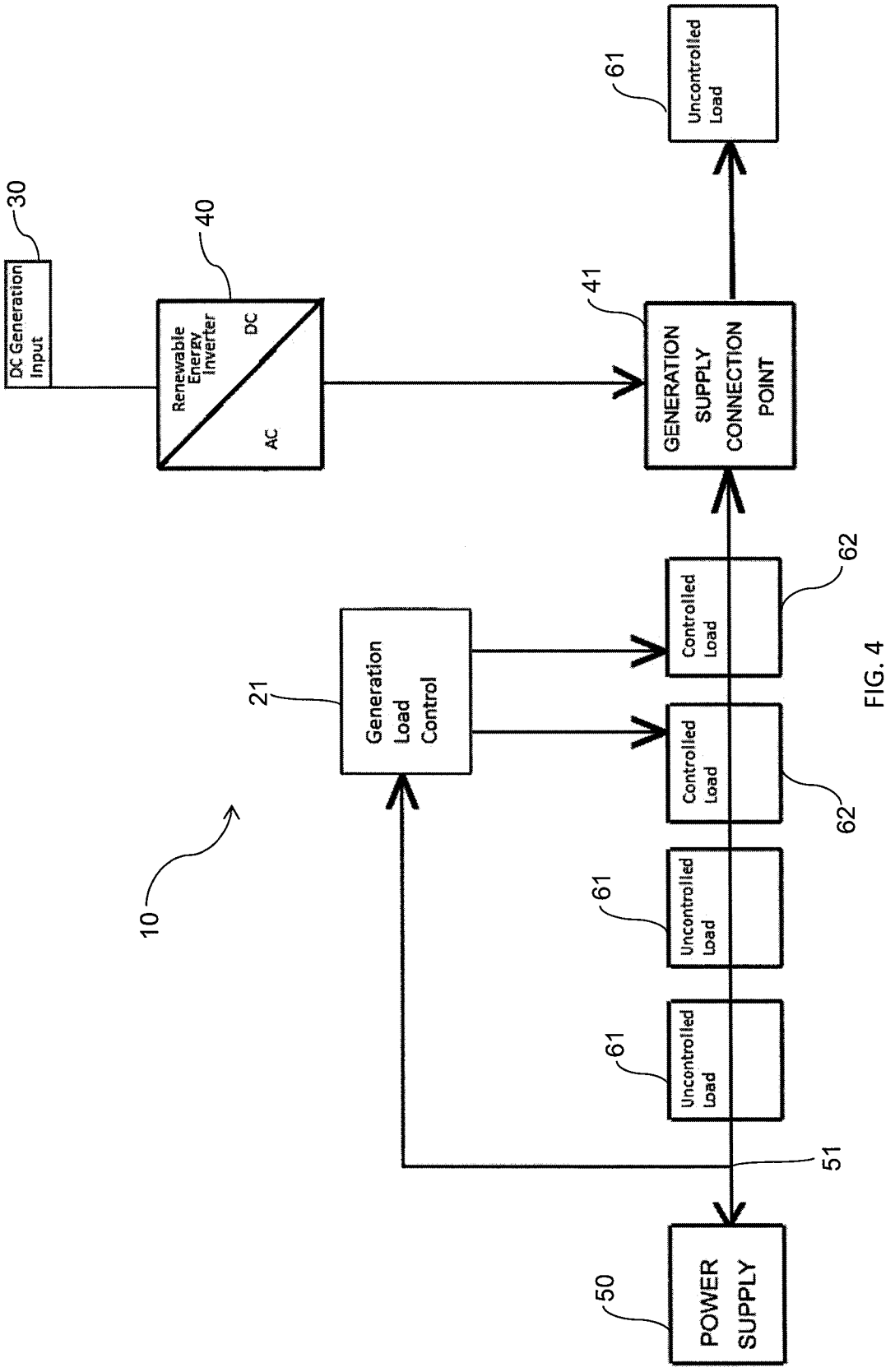
10
21
Generation Load Control
30
DC Generation Input
40
Renewable Energy Inverter
DC
AC
41
GENERATION SUPPLY CONNECTION POINT
50
POWER SUPPLY
51
61
Uncontrolled Load
61
Uncontrolled Load
61
Uncontrolled Load
62
Controlled Load
62
Controlled Load

FIG. 4

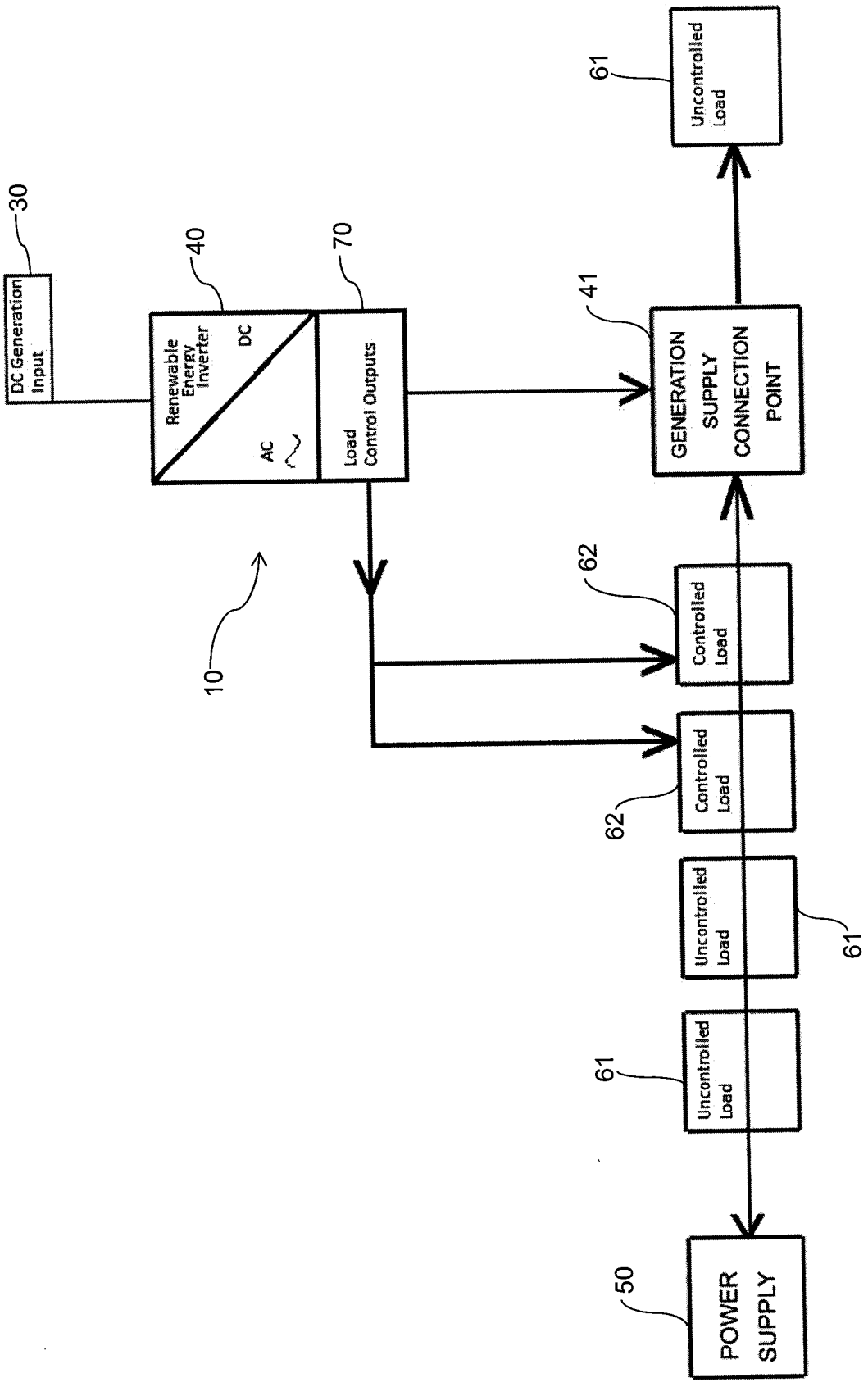
30
DC Generation Input
40
Renewable Energy Inverter
DC
AC
70
Load Control Outputs
10
41
GENERATION SUPPLY CONNECTION POINT
61
Uncontrolled Load
62
Controlled Load
62
Controlled Load
61
Uncontrolled Load
61
Uncontrolled Load
50
POWER SUPPLY

FIG. 5

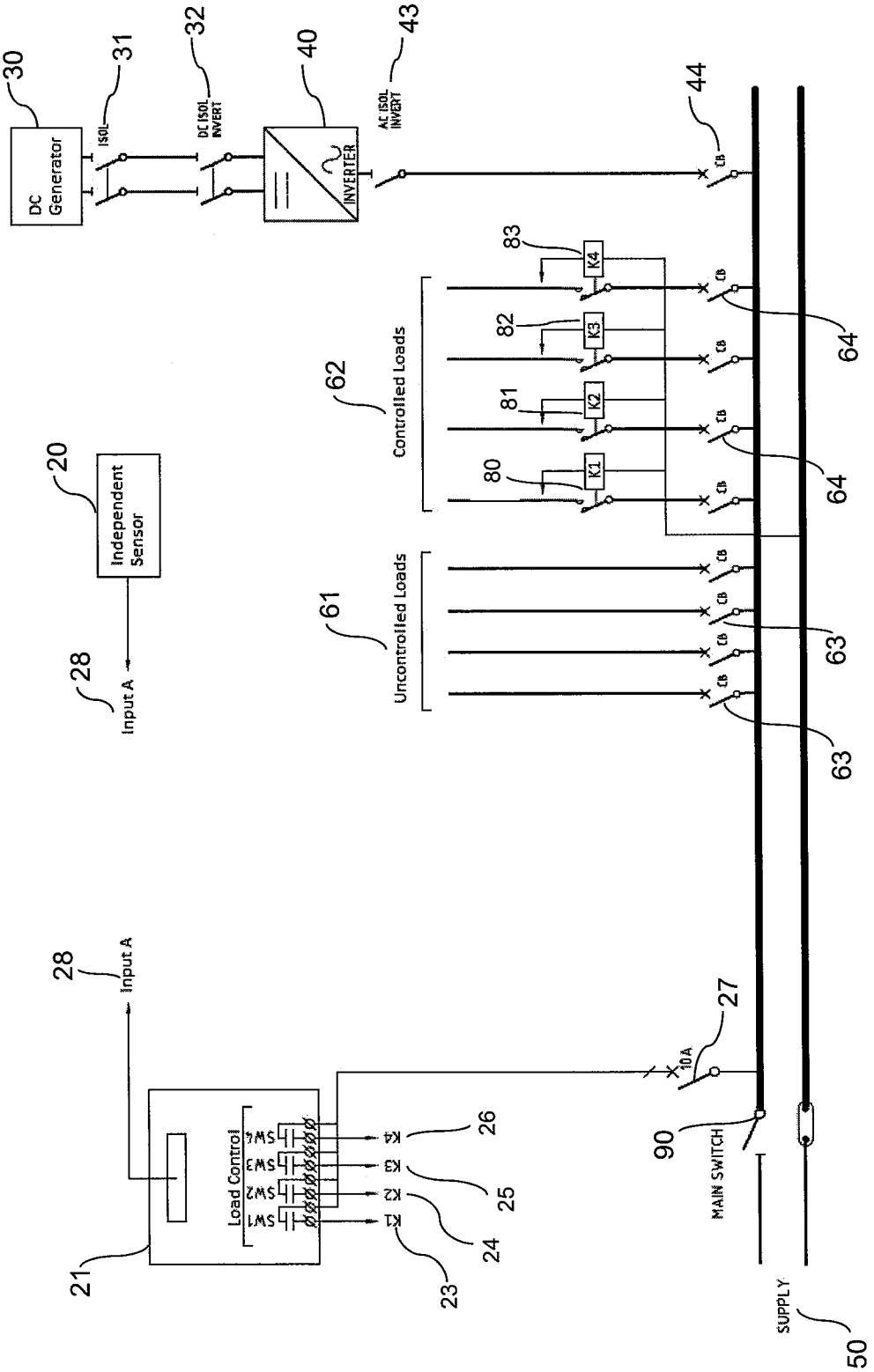
30
DC Generator
31
ISOL
32
DC ISOL INVERT
40
INVERTER
43
AC ISOL INVERT
44
CB
83
K4
82
K3
81
K2
80
K1
62
Controlled Loads
64
61
Uncontrolled Loads
63
20
Independent Sensor
28
Input A
28
Input A
21
Load Control
SW4
SW3
SW2
SW1
K4
K3
K2
K1
26
25
24
23
27
10A
90
MAIN SWITCH
SUPPLY
50

FIG. 6

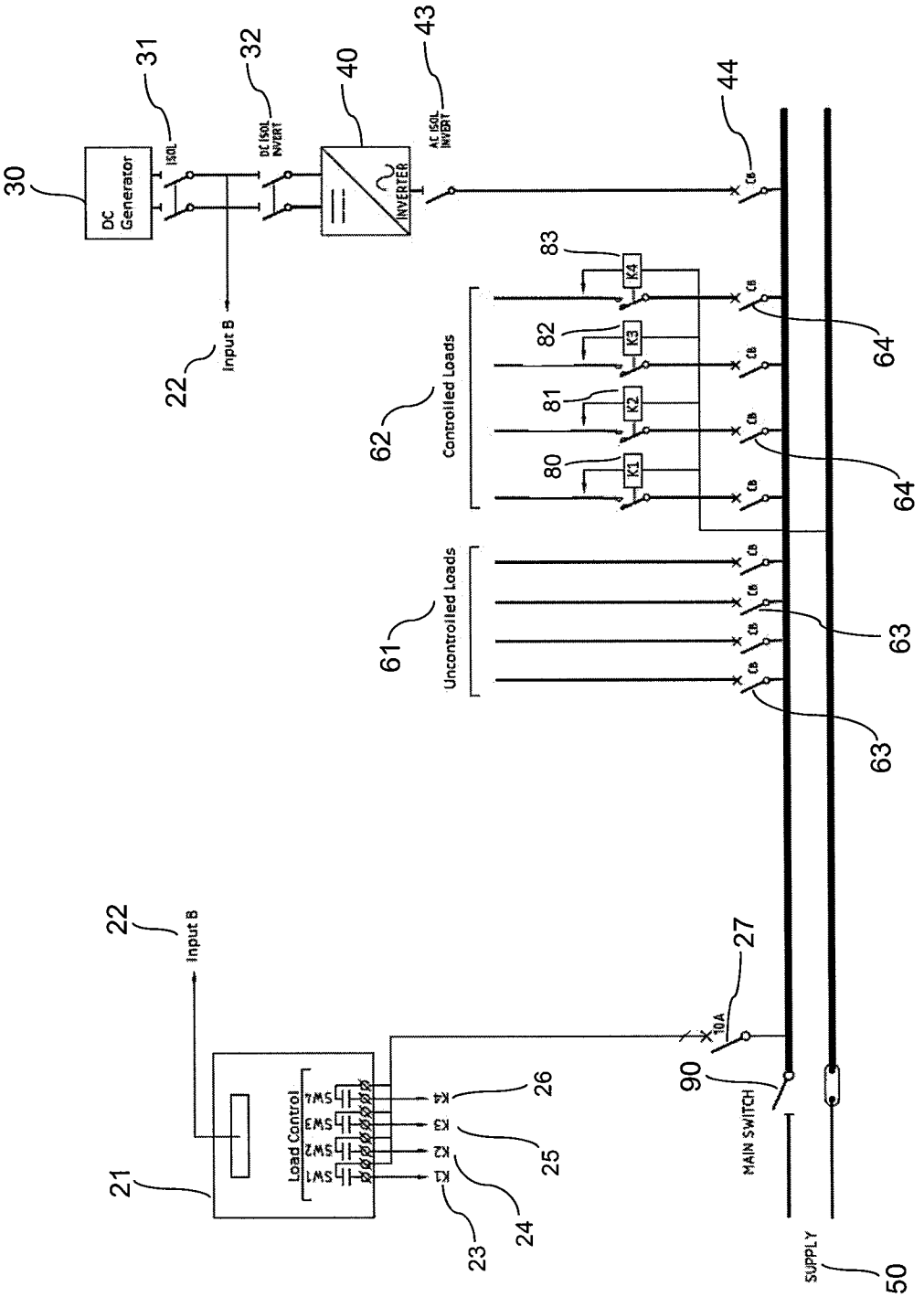
30
DC Generator
31
ISOL
32
DC ISOL INVERT
40
INVERTER
43
AC ISOL INVERT
44
CB
22
Input B
83
K4
82
K3
81
K2
80
K1
62
Controlled Loads
64
61
Uncontrolled Loads
63
22
Input B
21
Load Control
SW4
SW3
SW2
SW1
K4
K3
K2
K1
26
25
24
23
27
10A
90
MAIN SWITCH
SUPPLY
50

FIG. 7

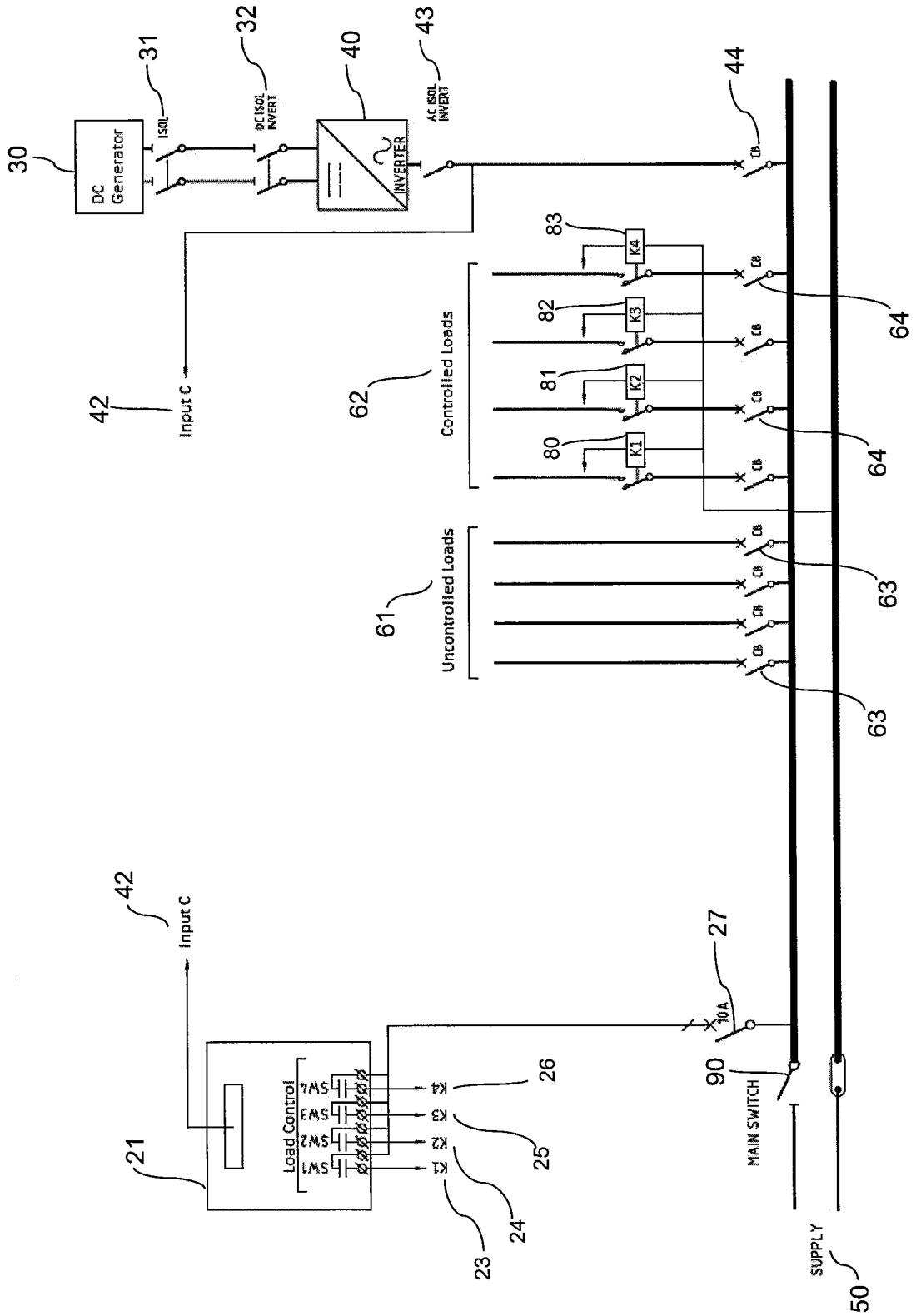
30
DC Generator
31
ISOL
32
DC ISOL INVERT
40
INVERTER
43
AC ISOL INVERT
44
CB
42
Input C
62
Controlled Loads
83
K4
82
K3
81
K2
80
K1
64
61
Uncontrolled Loads
63
27
10A
90
MAIN SWITCH
SUPPLY
50
21
Load Control
SW4
SW3
SW2
SW1
K4
K3
K2
K1
26
25
24
23

FIG. 8

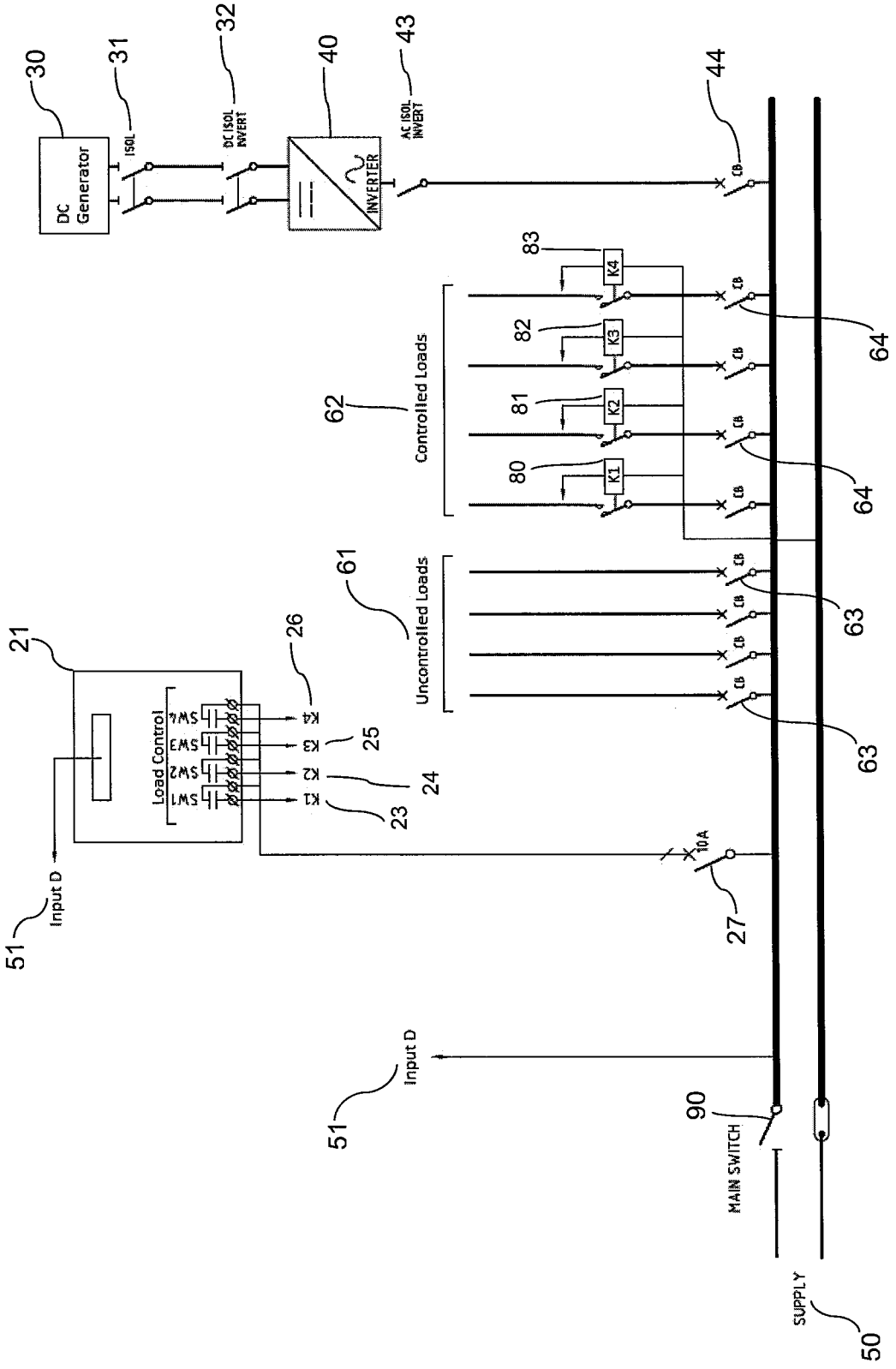
30
DC Generator
31
ISOL
32
DC ISOL INVERT
40
INVERTER
43
AC ISOL INVERT
44
CB
83
K4
82
K3
81
K2
80
K1
62
Controlled Loads
64
61
Uncontrolled Loads
63
21
Load Control
SW4
SW3
SW2
SW1
K4
K3
K2
K1
26
25
24
23
Input D
51
10A
27
Input D
51
90
MAIN SWITCH
SUPPLY
50

FIG. 9

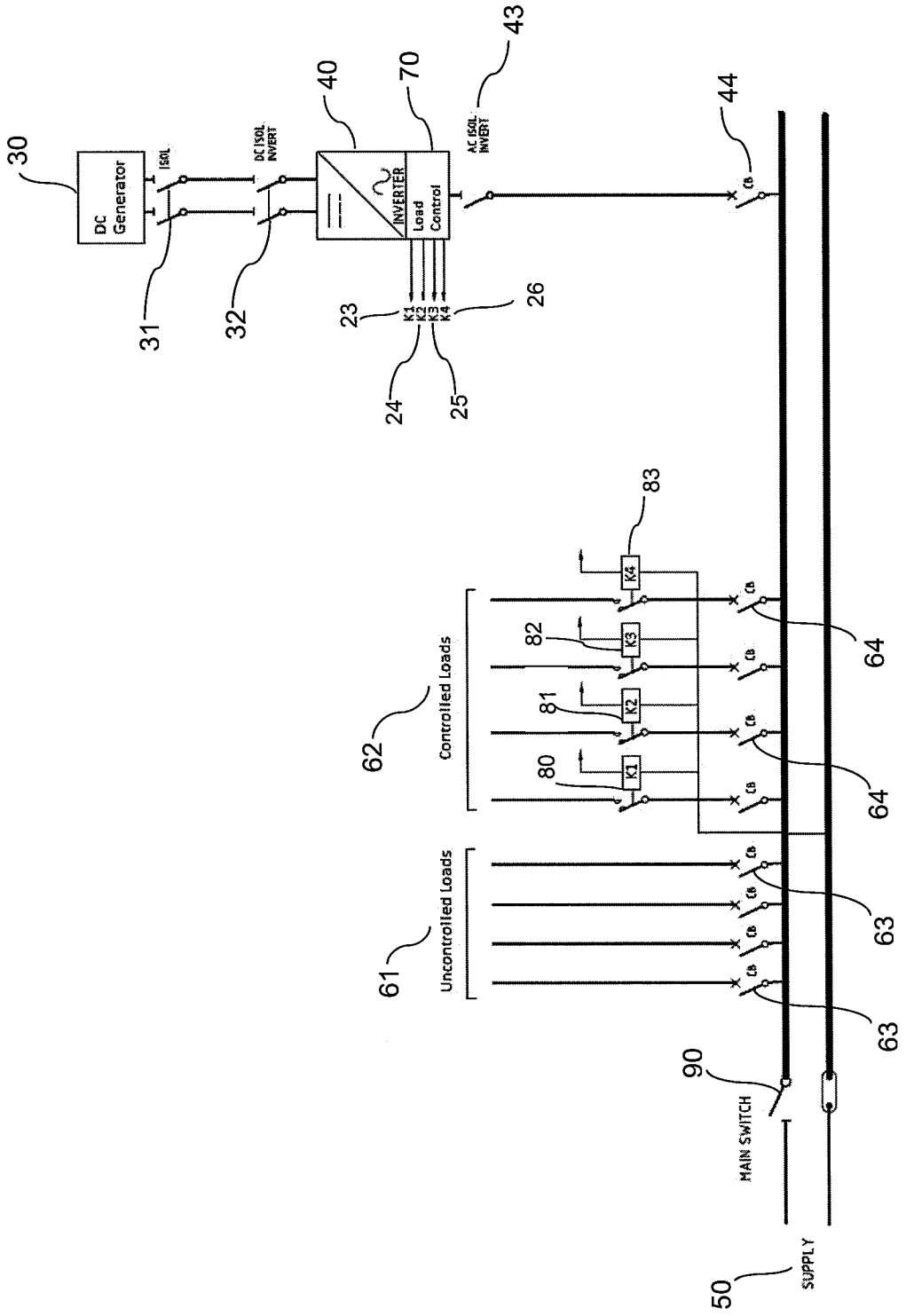
30
DC Generator
ISOL
31
DC ISOL INVERT
32
40
INVERTER
70
Load Control
43
AC ISOL INVERT
44
23
K1
K2
K3
K4
24
25
26
83
82
81
80
62
Controlled Loads
61
Uncontrolled Loads
64
63
90
MAIN SWITCH
50
SUPPLY

FIG. 10

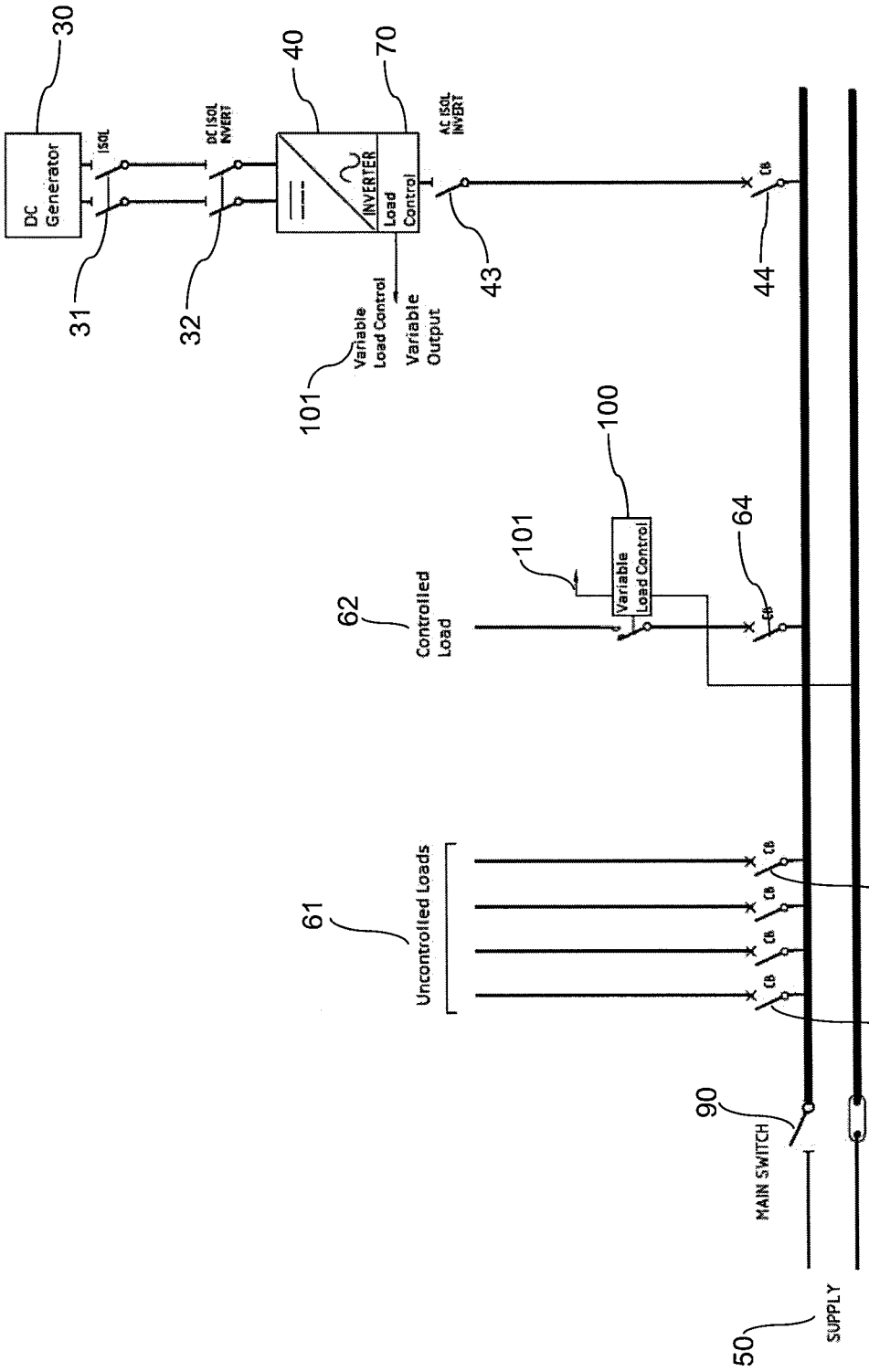
30
DC Generator
ISOL
DC ISOL INVERT
40
70
INVERTER
Load Control
AC ISOL INVERT
31
32
43
44
CB
Variable Load Control
Variable Output
101
100
Variable Load Control
64
62
Controlled Load
101
61
Uncontrolled Loads
CB
63
90
MAIN SWITCH
50
SUPPLY

FIG. 11

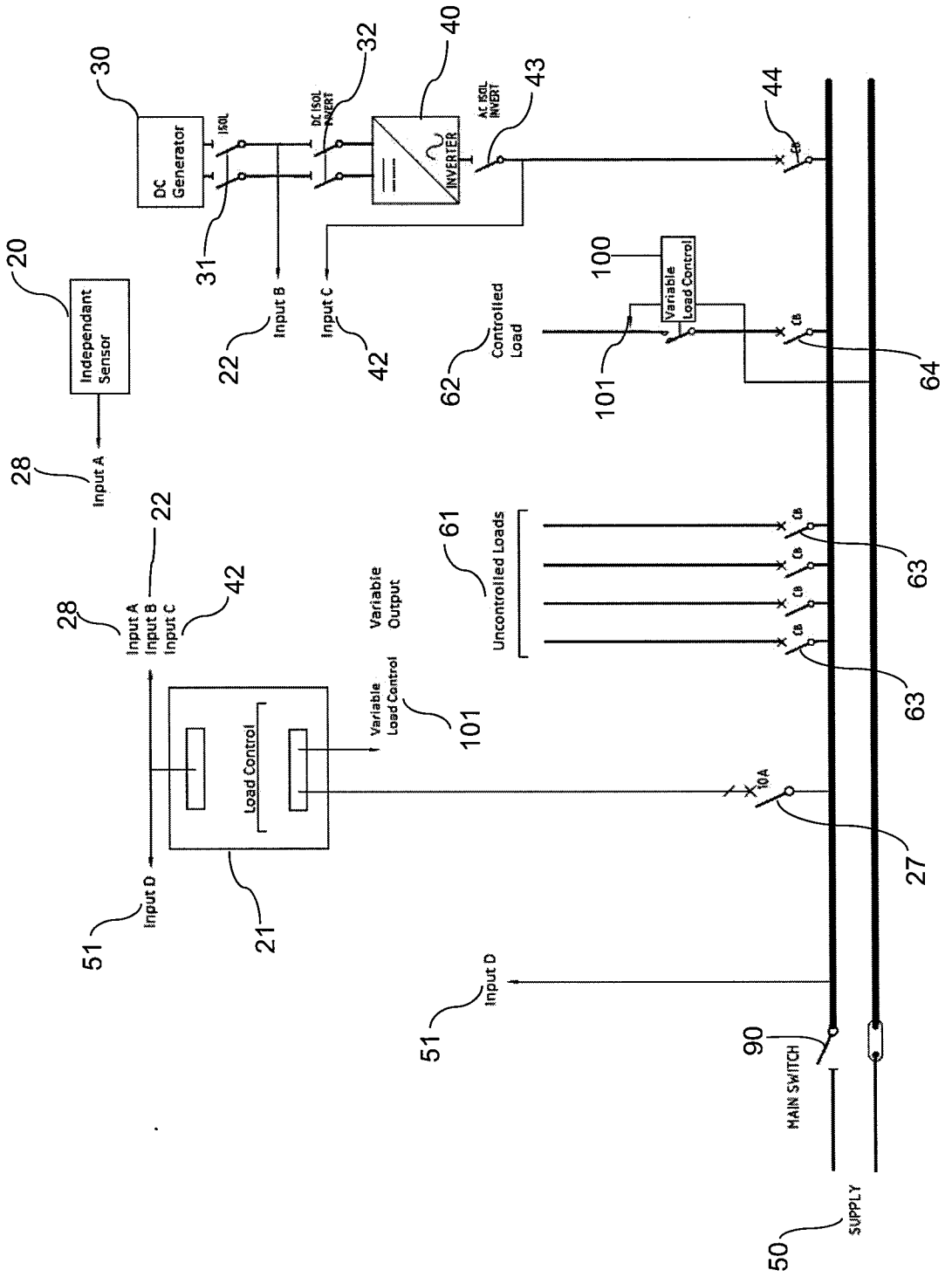
30
DC Generator
ISOL
31
32
DC ISOL INVERT
40
INVERTER
43
AC ISOL INVERT
44
20
Independant Sensor
28
Input A
22
Input B
42
Input C
62
Controlled Load
100
Variable Load Control
101
64
61
Uncontrolled Loads
63
Variable Output
Load Control
10A
27
51
Input D
21
90
MAIN SWITCH
50
SUPPLY

FIG. 12

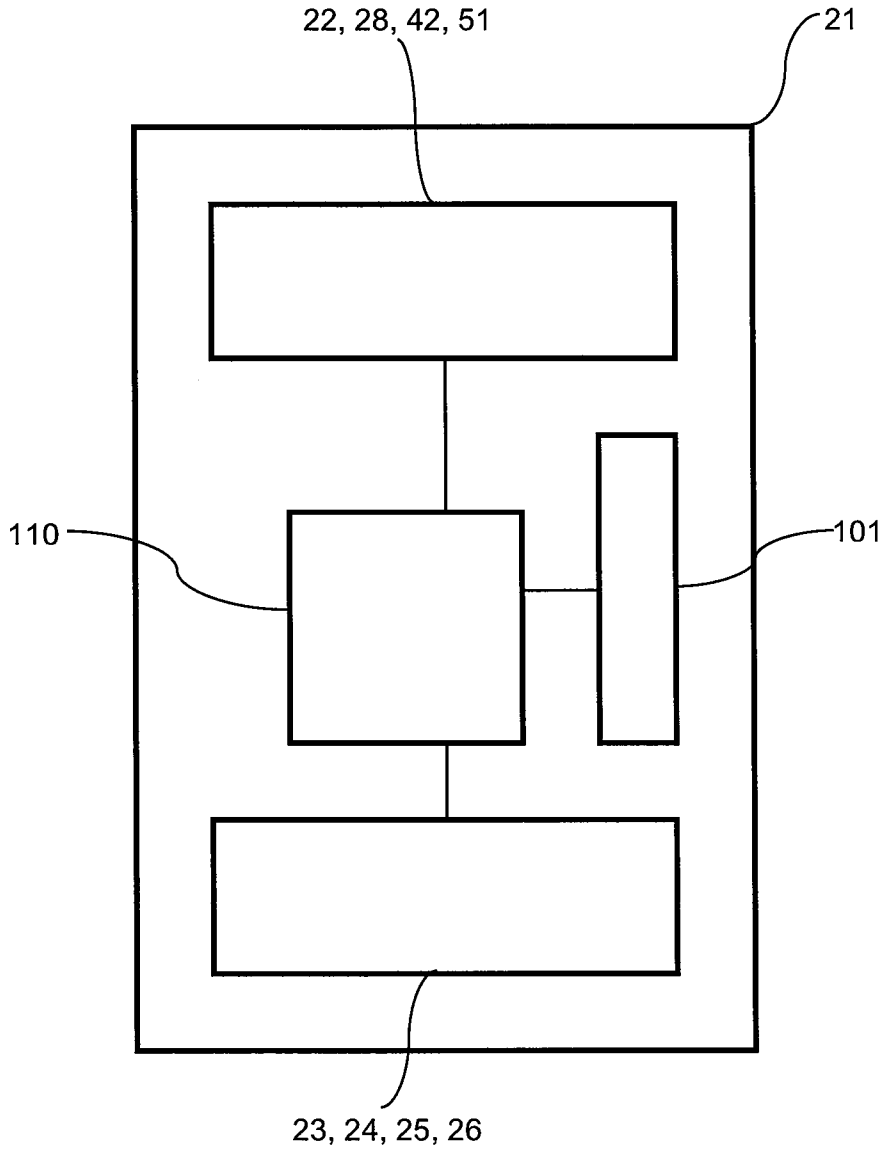

FIG. 13

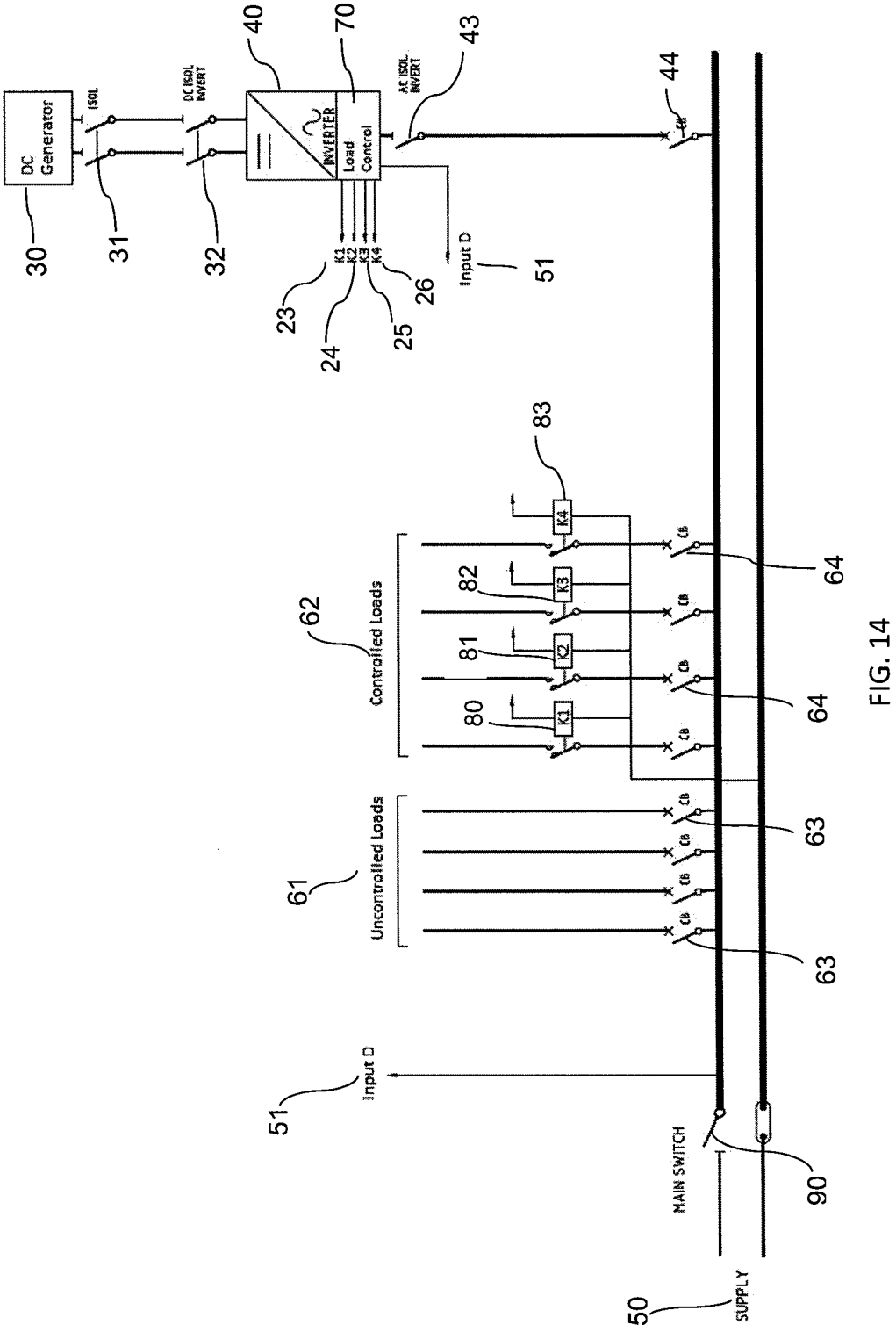
DC Generator
ISOL
DC ISOL INVERT
INVERTER
Load Control
AC ISOL INVERT
Input D
Controlled Loads
Uncontrolled Loads
Input D
MAIN SWITCH
SUPPLY
K1
K2
K3
K4
CB
30
31
32
40
70
43
44
23
24
25
26
51
80
81
82
83
61
62
63
64
90
50

FIG. 14

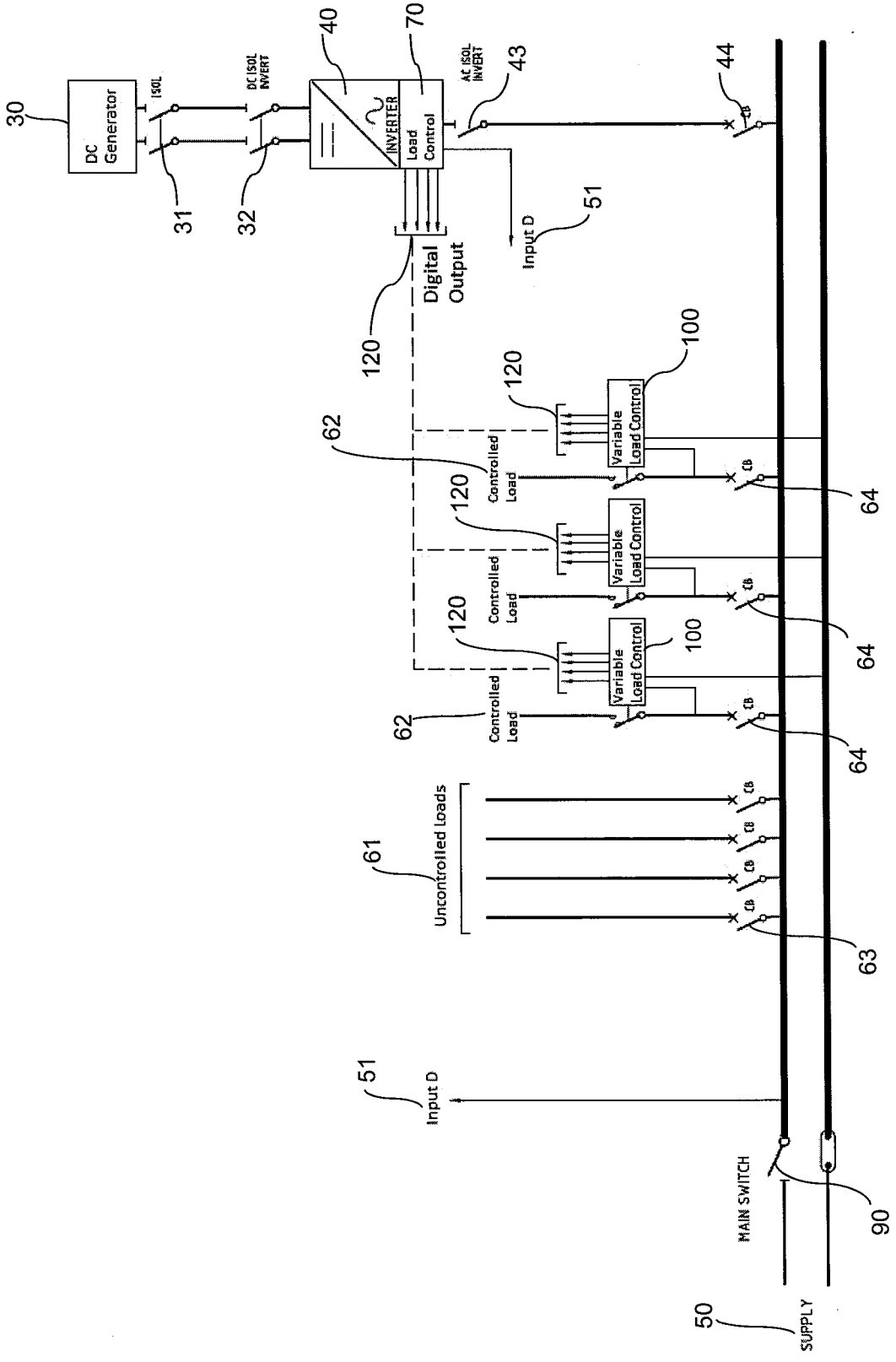
30
DC Generator
ISOL
31
DC ISOL INVERT
32
40
INVERTER
70
Load Control
AC ISOL INVERT
43
44
CB
Input D
51
Digital Output
120
100
Variable Load Control
62
Controlled Load
64
Uncontrolled Loads
61
63
MAIN SWITCH
90
50
SUPPLY

FIG. 15

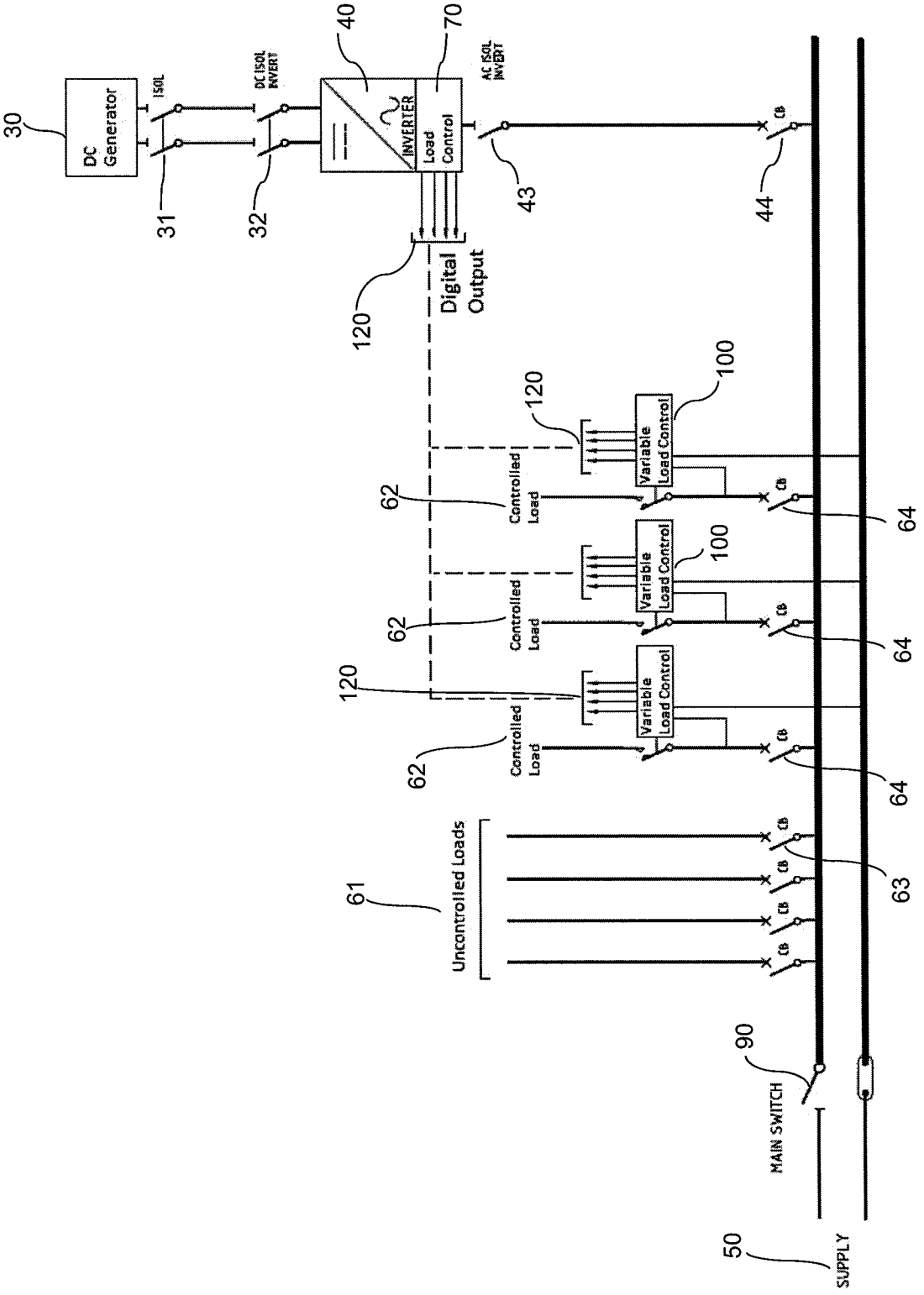
30
DC Generator
ISOL
31
DC ISOL INVERT
32
40
INVERTER
Load Control
70
AC ISOL INVERT
43
CB
44
120
Digital Output
100
Variable Load Control
62
Controlled Load
64
61
Uncontrolled Loads
63
90
MAIN SWITCH
50
SUPPLY

FIG. 16

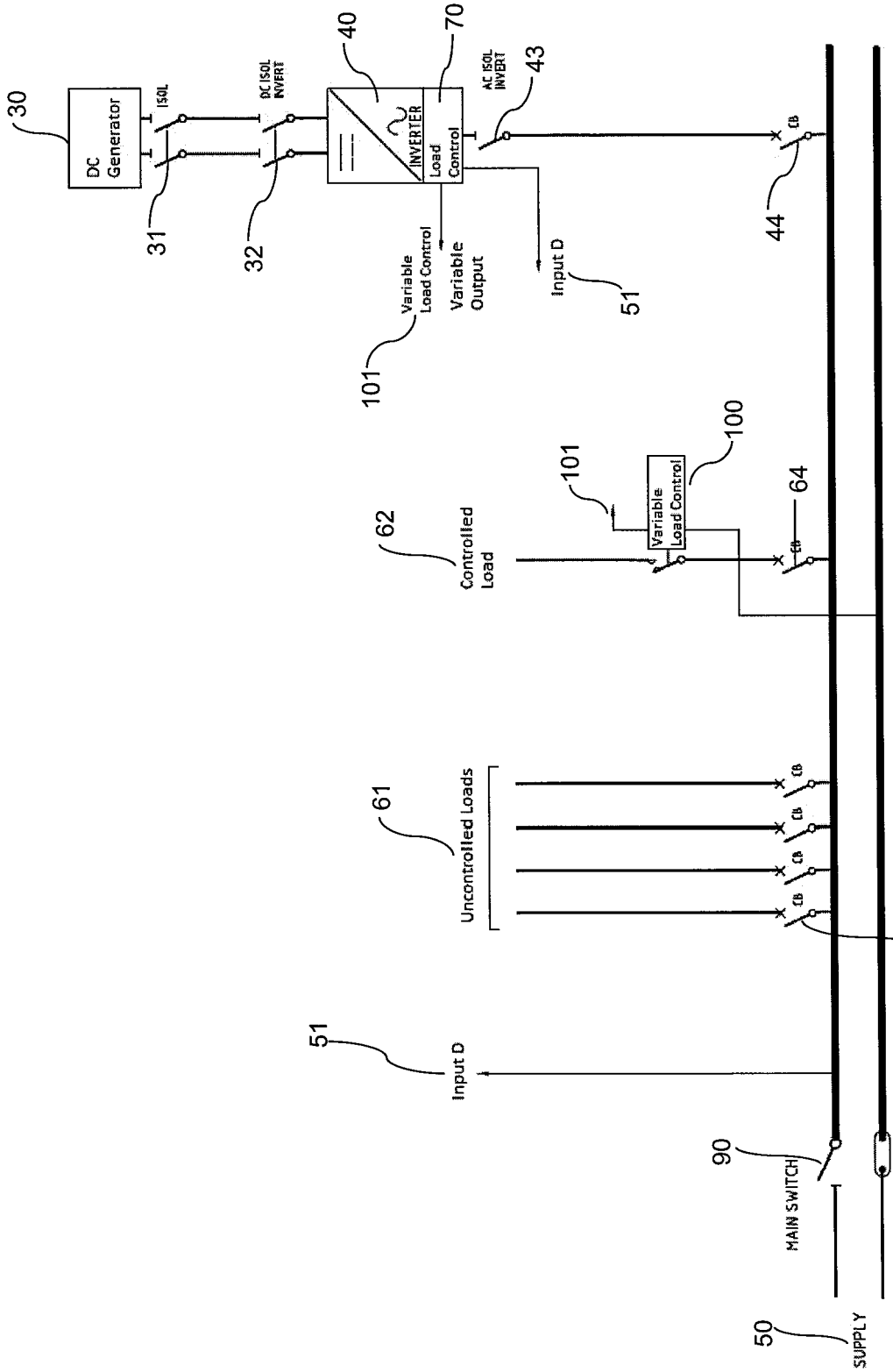
30
DC Generator
ISOL
31
DC ISOL INVERT
32
40
INVERTER
70
Load Control
AC ISOL INVERT
43
44
CB
Variable Load Control
101
Variable Output
Input D
51
100
Variable Load Control
64
62
Controlled Load
61
Uncontrolled Loads
63
51
Input D
90
MAIN SWITCH
50
SUPPLY

FIG. 17

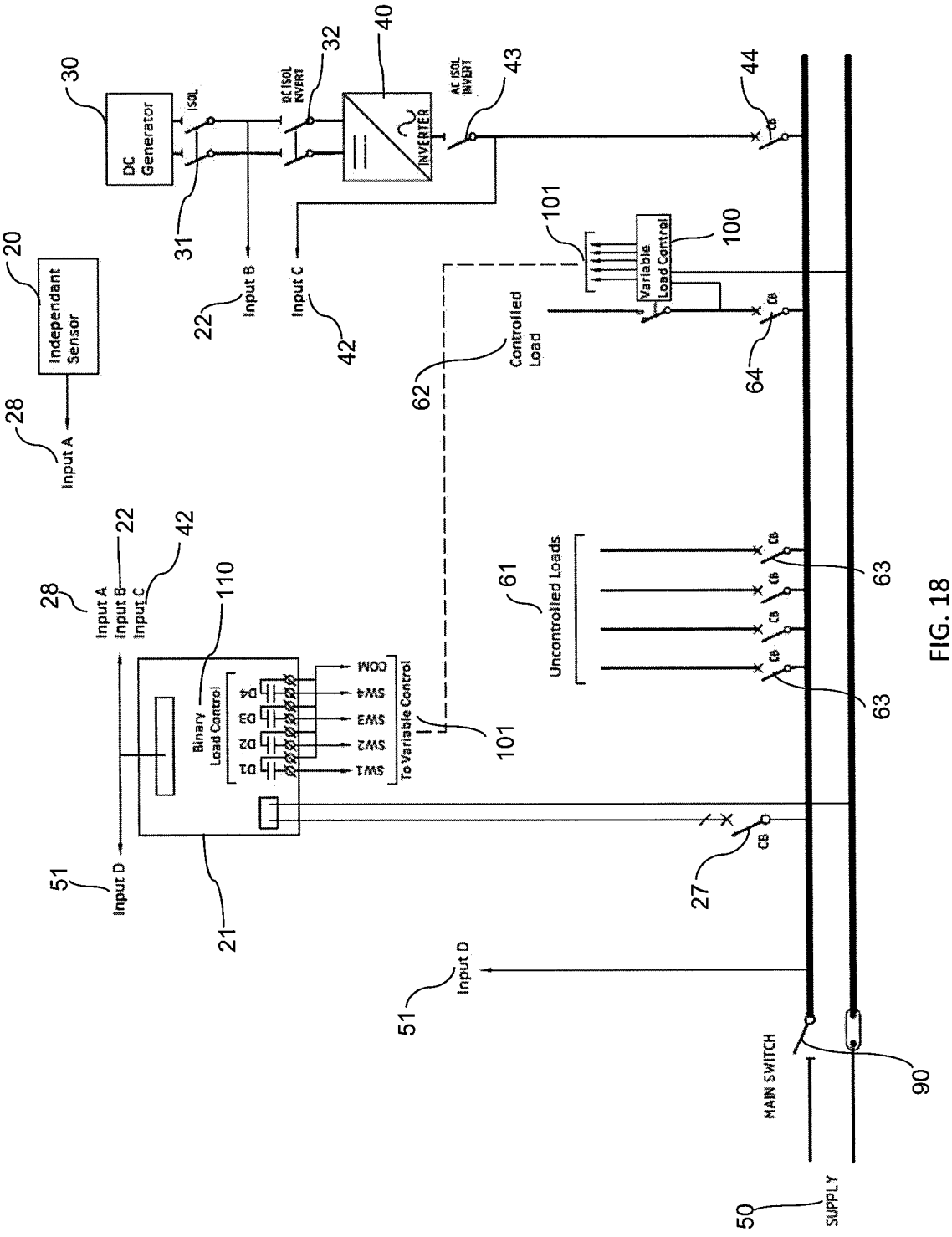
30
DC Generator
ISOL
31
DC ISOL INVERT
32
40
INVERTER
AC ISOL INVERT
43
44
CB
20
Independant Sensor
28
Input A
22
Input B
42
Input C
101
Variable Load Control
100
Controlled Load
62
64
CB
28
Input A
Input B
Input C
22
42
110
Binary Load Control
D1
D2
D3
D4
SW1
SW2
SW3
SW4
COM
To Variable Control
101
61
Uncontrolled Loads
CB
63
63
51
Input D
21
27
CB
51
Input D
MAIN SWITCH
90
50
SUPPLY

FIG. 18

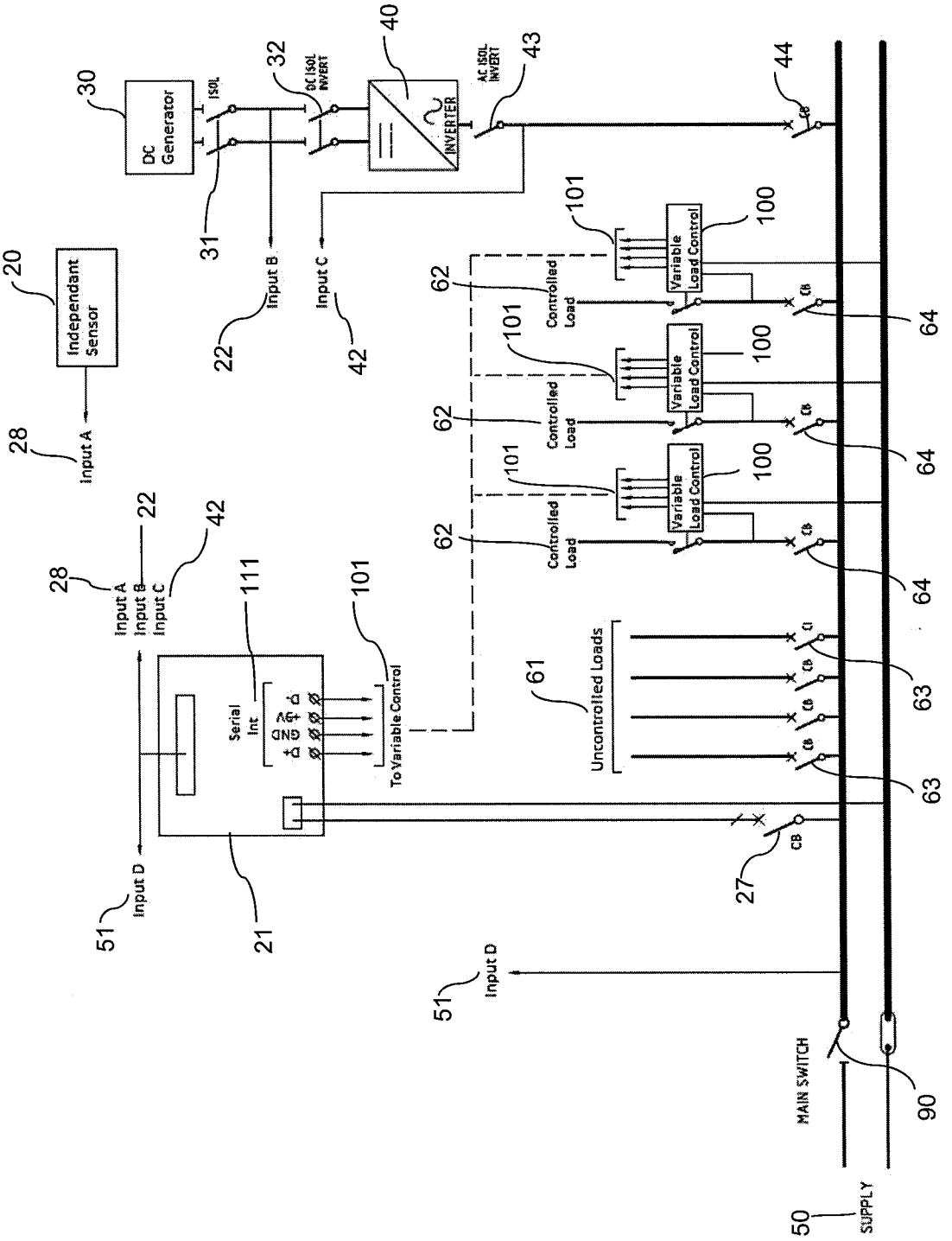
DC Generator
ISOL
DC ISOL INVERT
INVERTER
AC ISOL INVERT
Independant Sensor
Input A
Input B
Input C
Input D
Serial Int
To Variable Control
Uncontrolled Loads
Controlled Load
Variable Load Control
CB
MAIN SWITCH
SUPPLY
20
22
28
30
31
32
40
42
43
44
50
51
61
62
63
64
90
100
101
111
21
27

FIG. 19