SELECTIVE REMOVAL OF MATERIAL BY IRRADIATION

Background Of The Invention

This application is a Continuation-in-Part of U.S. Pat. App. Ser. No. 08/045,165, filed April 12, 1993 (the disclosure of which is incorporated herein by reference and which is referred to herein as the "parent application"), which is a Continuation-in-Part of U.S. Pat. App. Ser. No. 07/865,039 filed March 31, 1992 (the disclosure of which is incorporated herein by reference and which is referred to herein as the "'039 application"), which is a Continuation-in-Part of U.S. Pat. App. Ser. No. 07/611,198, filed November 9, 1990, now U.S. Pat. No. 5,099,557 (the "'557 patent"), which is a Division of U.S. Pat. App. Ser. No. 07/216,903, filed July 8, 1988, now U.S. Pat. No. 5,024,968 (the "'968 patent").

This invention relates to removing material from a surface. More particularly, the invention relates to the selective removal of material from the surface of a substrate by irradiation without altering the physical properties of material to be left on the substrate that is underlying or adjacent to the material to be removed.

Effective removal of undesired material from the surface of a substrate is a critical aspect of many important materials processing and product fabrication processes. As described in the parent application, undesired materials (which may also be considered as contaminants) include particles, unwanted chemical elements or compounds, and films or layers of material. Particles may be

This Sheet Has Been Replaced

THIS SHEET HAS BEEN REPLACED

discrete pieces of matter ranging in size from submicrons to granules visible to the unaided eye. Undesired chemicals include any element or compound which, at the time at which the removal process is performed, is undesirable. For example, hydroxyl groups (-OH) may be a desired reaction promoter on the surface of a substrate at one stage of a process and may be an undesired contaminant at another stage. Films or layers of material may be organic, such as human body oil from fingerprints, paint, and epoxy, or inorganic, such as oxides of the substrate material or other inorganic materials to which the substrate has been exposed.

Such undesired materials may need to be removed to render the substrate more useful for its intended purpose. For example, in certain precise scientific measurement devices, accuracy is lost when optical lenses or mirrors in the devices become coated with microfine surface contaminants. Similarly in semiconductors, surface defects due to minor molecular contaminants often render semiconductor masks or chips worthless. Reducing the number of molecular surface defects in a quartz semiconductor mask by even a small amount can radically improve semiconductor chip production yields. Similarly, removing molecular surface contaminants, such as carbon or oxygen, from the surface of silicon wafers before circuit layers are deposited on the wafer or between deposition of layers significantly improves the quality of the computer chip produced.

Selective removal of layers of the substrate material may be done to form very small-scale structures on the substrate surface (so-called "nanostructures"). Material (whether substrate material, oxide layers, or other layers of material) may also be selectively removed in differing amounts across the surface of the substrate to changes the surface topography of the substrate (such as smoothing a rough surface).

Material processing equipment often requires treatment for removal of undesired material to prevent contamination of products processed by the equipment. For example, a significant portion of the undesired material that ultimately contaminates silicon wafers during production emanates from production apparatus such as process chambers in which the wafers are placed, quartz wafer boats used to hold wafers for passage through quartz furnace tubes (and the furnace tubes themselves), and pipes that conduct processing gas to the chambers. Accordingly, the level of wafer contamination

experienced during the course of production can be significantly reduced by the periodic cleaning of such apparatus.

In general, any process used for removing material from a substrate should do so without affecting the physical properties of the (desired) material that remains. The physical properties that should remain unaffected can in general include crystalline structure, conductivity, density, dielectric constant, charge density, Hall coefficient, and diffusion coefficient for electrons/holes. In particular semiconductor applications (such as metal oxide semiconductor ("MOS"); field effect transistor ("FET"); and bipolar junction ("BJT")), the properties can include capacitance/area in MOS; junction capacitance; channel current in an FET, directed from drain to source; voltage from collector to base, emitter to base in a BJT; voltage from drain to source, gate to source in an FET; MOS threshold potential; MOS surface state charge/area; and storage delay time. Further, it may be undesirable to change the topography (such as the surface roughness) of the remaining material.

As described in detail in the parent application, many techniques have been proposed (and are currently used) for removing undesired materials. These include wet chemical cleaning (RCA process), dilute HF, megasonic and ultrasonic, and supercritical fluid cleaning, UV and ozone cleaning, brush cleaning, vapor HF, laser-assisted liquid cleaning (including the Allen process and Tam process), surface melt, annealing, and ablation.

Another technique is plasma cleaning, which may be used to clean the process chambers of reactive ion etch (RIE) tools after a certain amount of processing (e.g. a certain number of wafers) is completed. The preferred plasma species are oxygen, carbon tetrachloride, and nitrogen, which can be used in various mass molar concentrations for cleaning optics and silicon surfaces. Electron cyclotron resonance (ECR) based plasmas are currently state of the art. The effectiveness of this type of cleaning is limited to particles -- film removal appears to be difficult and damaging to the electrical parametrics.

Dry ice (CO_2) cleaning (also known as snow cleaning and CO_2 jet spray cleaning) is a method of delivering CO_2 snow via a hand-held device having various orifices to clean a surface. This technique is limited by the solubility of the particle in the CO_2 snow, e.g. if the particle is not soluble in CO_2 then it will not be removed from the surface. Further, oxides and polymeric films cannot be removed using this cleaning technique.

This Sheet Has Been Replaced

THIS SHEET HAS BEEN REPLACED

All of these techniques suffer from some drawbacks, including: inability to remove very small particles; undesirable alteration of the underlying substrate's physical properties; consumption of large quantities of expensive materials such as ultrapure water and gases; and production of toxic waste products (such as HF acids).

Films, and in particular oxidation films, are a common, troublesome category of materials that need to be removed from a substrate. Most materials that are exposed to an oxygenated atmosphere (e.g., air) form a native oxide that coats the surface. Such oxide layers are typically a substantially continuous layer of molecules of the oxide material. In most cases, this native oxide layer is detrimental depending on how the substrate material will be used. One approach to this problem has been to maintain the substrate material in a vacuum to prevent oxide growth. Known techniques for removing oxide films include treating them with strong acids such as aqua regia, sulfuric acid and hydrofluoric acid.

In semiconductor fabrication, the removal of native oxide (silicon dioxide) from the silicon substrate is of great concern as technology geometries continue to get smaller. Current methods to remove the silicon dioxide employ liquid HF, and experiments are being undertaken with vapor phase halogens and vapor phase halogens in conjunction with UV radiation. B. Van Eck, S. Bhat, and V. Menon, "Vapor-phase etching and cleaning of SiO_2," Proceedings, Microcontamination 92, (Santa Clara, CA; October 27-30, 1992), p. 694; J. de Larios, W. Krusell, D. McKean, G. Smolinsky, B. Doris, and M. Gordon, "Gas-phase cleaning of trace metal and organic contaminants from wafers: Ultraviolet irradiated oxygen-based and chlorine-based chemistries," Proceedings, Microcontamination 92, (Santa Clara, CA; October 27-30, 1992), p. 706; M. Miyashita, T. Tusga, K. Makihara, and T. Ohmi, "Dependence of surface microroughness of CZ, FZ, and EPI wafers on wet chemical processing," Journal of the Electrochemical Society, vol. 139 (8) 1992, p. 2133; and T. Ohmi, "ULSI reliability through ultraclean processing," Proceedings IEEE, vol. 81 (5), p. 716. Using halogen-based chemistry can damage adjacent circuitry since it is a gross, rather than pinpoint, method of removal.

Removal of surface oxides is also important in preparing metal substrates for the application of adhesives as an alternative to welding in aerospace, automotive and construction (building) applications. Removal of oxide films

also has applications in reconditioning weathered metal surfaces and improving the grade of circulated coinage.

Another important treatment process is the creation of nanostructures (extremely small physical structures) on or in substrate materials, such as pressure transducers, accelerometers, atomic force microscope probes, and micromotors. One technique proposed for creation of nanostructures involves chemical etching in combination with masking techniques (useful in bulk micromachining where structural layers of material are built upon a wafer and then a sacrificial layer is etched away). J. Bryzaek, K. Peterson, and W. McCulley, IEEE Spectrum, May, 1994, p. 20. Another proposed technique involves the laser-focused deposition of material. J.J. McClelland, R.E. Scholten, E.C. Palm, and R.J. Celotta, "Laser-focused atomic deposition", Science, vol. 262, 5 November 1993, p.877.

Another important treatment process is planarization, to eliminate or reduce non-uniformities in the surface of a substrate. A commonly-used technique for planarization is chemical mechanical polishing (CMP), which uses proprietary slurry mixtures to grind the surface to a planar level through the use of polishing pads. This surface polishing provides the advantage of improved chip performance. CMP planarization is controlled by "etch stops" and by timing the process so that excessive polishing does not occur. This process produces large quantities of contaminants (residual from the slurry) and is very expensive (with an average cost of approximately $35 per wafer), which is attributable to the cost of the consumables such as slurry, water, pads, and brushes for brush cleaners. Another problem associated with CMP is removing the slurry residual from the wafer surface. Removal using brush cleaning, which is the current process, is only efficient to approximately 0.5μm particles. An additional drawback of the CMP planarization process is that it is not clusterable with other current cleaning technologies.

Summary Of The Invention

The invention solves the problems and avoids the drawbacks of the prior art by selectively removing undesired material from a treatment surface of a substrate by irradiating the undesired material with energetic photons having a spatial and temporal concentration (energy and power fluxes) sufficient to remove the undesired material and insufficient to alter the physical properties of the underlying substrate. Preferably, a gas is flowed continuously across the

surface to carry away removed material to avoid redepositing the material elsewhere on the treatment substrate. Optimally, the gas is inert to the substrate and to the material to be removed. Moreover, to best avoid the possibility of contaminants entrained in the flow being deposited on the treatment surface, the flow of gas is preferably in the laminar flow regime.

The radiation source (of energetic photons) may be any means known in the art to provide photons of the requisite energy level, including pulsed or continuous wave lasers and high-energy lamps. In some applications, such as those in which the bonds of interest require the near-simultaneous application of multiple photons, a source with a high power output is preferred, such as a pulsed ultraviolet laser.

The invention is shown to be applicable to the removal of substantially continuous layers of undesired organic and inorganic films. Removal of organic films includes removing paint and marker from stainless steel or quartz substrates. Removal of inorganic oxidation films includes removing oxidation from chromium, molybdenum alloys, nickel/iron alloys, stainless steel, tantalum, tungsten, copper, erbium, and zirconium and removing polycrystalline silicon from quartz. Depending on the properties and thickness of the undesired material and the substrate, and the properties of the available radiation source, it may be necessary to remove the undesired material in a succession of treatment applications.

The topography of a surface may also be modified by appropriate application of the treatment process. For example, relatively more material can be removed for regions in which the thickness of the material is relatively greater, and less in regions where the thickness is less to produce a more uniform material thickness. This can effectively reduce the surface roughness of the material. A source of photons can be coupled in a control loop with an ellipsometer or other surface metrology device to provide feedback to monitor and control the removal of the material in each region. Similarly, applying the radiation to a rough surface at a relatively shallow angle provides a greater incident concentration of photons on the more prominent portions of the surface, while the less prominent portions are shadowed and thus receive a lesser concentration of photons. Relatively more material is therefore removed from the prominent portions, reducing the surface roughness.

Nanostructures can be created by selectively irradiating a surface to remove material from selected areas to a selected depth.

Brief Description Of The Drawings

Fig. 1 is a schematic diagram of a method and apparatus for removing undesired material from a substrate according to the principles of the invention.

Figs. 2A-B are schematic diagrams of two test apparatuses used to remove materials from selected substrates.

Fig. 2C is a schematic diagram of a third apparatus, similar to those in Figs. 2A-B but with a simpler optical train.

Fig. 3 is a schematic diagram of the geometry of the incident radiation region produced on a substrate by any of the apparatuses of Figs. 2A-C.

Fig. 4 is a schematic illustration of a technique for selectively removing material from a substrate to create nanostructures.

Fig. 5 is a schematic illustration of a substrate prior to the process of planarization.

Fig. 6 is a schematic diagram of a first apparatus for use in the process of planarization of the substrate of Fig. 5.

Fig. 7 is a schematic illustration of the selective reduction of the surface roughness of a substrate by irradiating the surface obliquely.

Detailed Description

Reference will now be made in detail to presently preferred embodiments of the invention, examples of which are illustrated in the accompanying drawings. Throughout the drawings, like reference characters are used to designate like elements.

1. Basic Treatment Method and Apparatus

A method and apparatus for removing undesired material from a treatment surface of a substrate without altering the physical properties of the substrate is illustrated schematically in Fig. 1. As shown in Fig. 1, apparatus 10 for treating a substrate 12 from which undesired material is to be removed includes a radiation system 400, a gas system 500, and a relative motion system 600. Irradiation system 400 includes a source 410 of radiation 11 (which consists of energetic photons), such as a laser and suitable delivery optics 450 that conduct radiation 11 to the treatment surface of substrate 12. Gas system 500 includes a source 510 of a gas 18 and an associated delivery system 550 for flowing gas 18 over at least the portion of the surface of substrate

12 to which radiation 11 is applied. Gas 18 is preferably inert to substrate 12 and is flowed across substrate 12 so as to bathe substrate 12 in a non-reactive gas environment. Preferably, gas 18 is a chemically inert gas such as helium, nitrogen, or argon. Relative motion system 600 provides for relative motion between a portion of the treatment surface of substrate 12 to be treated and radiation 11 and, optionally, gas 18.

Each of the constituent elements of these components of apparatus 10 (radiation source 410, delivery optics 450, gas source 510, gas delivery system 550, and relative motion system 600) may be such as are described in the parent application and are readily selectable by the artisan to configure the apparatus in accordance with the principles of the invention. For example, delivery optics 450 may include mirrors, lenses, optical fibers, collimators, apertures, and other elements. Gas delivery system 550 may include conduits, chambers, lines, valves, filters, flow meters, and other elements. Relative motion system 600 may be any suitable system for translational or rotational movement of substrate 12 with respect to radiation 11 and gas 18, and may include a translational stage for planar translation of the substrate, a rotational fixture for rotating the substrate, or movable components in the delivery optics to scan radiation beam 11 across the substrate. Illustrative embodiments of apparatus 10 are described in more detail below.

According to the method of the invention, energetic photons are irradiated upon the substrate treatment surface in a spatial and temporal concentration (energy and power fluxes) sufficient to remove undesired material from the substrate treatment surface and insufficient to alter the physical properties of material that is desired to be left on the substrate surface.

To remove the undesired material, the bonds by which it is adhered to the underlying and adjacent material on the treatment surface (which may be more of the same material, the substrate material, or a third material) must be broken. Each such bond is broken by introducing an amount of energy at least equal to the energy of formation of the bond. Bond formation energies (i.e., the amount of energy released when the bond is formed) for common substrate materials are shown in Table 1a, below. The bond energies shown are between the material elements themselves (e.g., Cr-Cr) and between the material element and oxygen (e.g., Cr-O). Bond formation energies for various carbon compounds are shown in Table 1b, below.

Table 1a

Element	Bond Formation Energy (eV/bond)	
	Self	Oxygen (-O)
O		5.2
Cr	1.6	4.5
Si	3.4	8.3
Mo	4.2	5.8
Fe	1.0	4.1
Ni	2.1	4.0
Er		6.4
Zr		8.1
Ta		8.3
W		7.0

Table 1b

Element	Bond Formation Energy (eV/bond)
C	6.3
Cl	4.1
F	5.7
H	3.5
Mo	5.0
O	11.2
Si	4.7
Zr	5.8

The bonds are broken when energy carried by photons is imparted to the bonds in an amount greater than the bond formation energy. It is believed that there are energy inefficiencies inherent in this bond-breaking process and, therefore, that the amount of photon energy required is approximately twice the bond formation energy. As can be seen in Tables 1a, oxide bond energies are on the order of 4.0 to 8.3 eV, while organic (carbon) bond energies are on the order of 3.5 to 11.2 eV. Thus, photon energies of approximately 7 to 22 eV are required.

The energy of a photon depends on its wavelength, in the relationship:

$$E = \frac{hc}{\lambda}$$

where c is the speed of light (3.00×10^8 m/s), λ is wavelength (m), and *h* is Planck's constant (4.14×10^{-15} eV sec). Selection of the source of photons therefore depends on the photon energy required, and thus on the wavelength required. A variety of lasers are identified in Table 1c, below. The table identifies the laser medium (and whether the medium is gas (g), liquid (l), solid (s), or plasma (p)), the photon wavelength λ (nm), and the photon energy $\mathbf{E_{ph}}$ (eV). For continuous wave lasers, an average power $\mathbf{P_{ave}}$ (W) is also shown, and for pulsed lasers, the energy per pulse $\mathbf{E_{pulse}}$ (J), a representative pulse duration $\mathbf{t_{pulse}}$ (ns) and the peak power during a pulse $\mathbf{P_{peak}}$ (MW).

Table 1c

Medium	λ (nm)	Eph (eV)	Epulse (J)	tpulse (ns)	Pave (W)	Ppeak (MW)
C (6+) (p)	18	68.242	2.00E-03	50		4.00E-02
ArF excimer (g)	193	6.435	5.00E-01	50		1.00E+01
KrF excimer (g)	248	5.008	5.00E-01	34		1.47E+01
He-Cd (g)	442	2.810			1.00E-02	
Ar+ (g)	515	2.412			1.00E+01	
Rhodamine-6G dye (l)	560	2.218			1.00E-01	
	640	1.941			1.00E-01	
He-Ne (g)	633	1.962			1.00E-03	
Kr+ (g)	647	1.920			5.00E-01	
Ruby (s)	693	1.792	5.00E+00	50		1.00E+02
Ti(3+):Al2O3 (s)	660	1.882			1.00E+01	
	1180	1.053				
Nd(3+):glass (s)	1060	1.172	5.00E+01	50		1.00E+03
Nd(3+):YAG (s)	1064	1.167			1.00E+01	
KF Color Center (s)	1250	0.994			5.00E-01	
	1450	0.857			5.00E-01	
He-Ne (g)	3390	0.366			1.00E-03	
FEL (LANL)	9000	0.138	1.00E-03	50		2.00E-02
	40000	0.031	1.00E-03	50		2.00E-02
CO2 (g)	10600	0.117			1.00E+02	
H2O (g)	118700	0.010			1.00E-05	
HCN (g)	336800	0.004			1.00E-03	

Comparing the photon energies for the above lasers to the required energies identified above for common substrate materials (and accounting for the expected inefficiencies), it is apparent that in most cases the energy of a single photon will not be sufficient to break the bonds of interest. However, it is believed that the bond-breaking energy can be supplied by multiple photons if the photons strike the bond within a very short time, or essentially "simultaneously."

Since a certain amount of energy is required to break each bond, the total amount of energy (and thus, the total number of photons of a given energy) required to remove a given amount of undesired material from the treatment surface of a substrate is generally proportional to the number of bonds in that amount of material. It is believed that photons interact with bonds only in the interfacial region of the treatment surface (i.e., the topmost one or two layers of atoms or molecules (monolayers)). For removal of substantially continuous layers of material (such as oxide layers) it is therefore helpful to consider unit surface areas and thicknesses of material in monolayers. Thus, for a given surface area, the removal of a certain thickness (or number of monolayers) of material requires the effective application of a given amount of energy (number of photons). Of course, not all of the photons that strike a substrate treatment

surface will contribute to bond breaking -- it is believed that a small fraction of the photons contribute to bond breaking. This is believed to be at least in part because the effective locations (the bonds, or parts thereof) for absorption of the photon energy occupy a small fraction of the surface area. However, at least for a given material, it is believed that there is a relatively constant relationship between the actual number of photons required and the theoretical number based on the number of bonds to be broken. Accordingly, a relevant parameter to consider is the energy flux (energy per unit area, or number of photons per unit area) applied to a substrate treatment surface, which corresponds to a thickness of undesired material removed.

As noted above, there are cases in which the bonds of interest require more energy than is carried by a single photon emitted by the selected radiation source. Such bonds are referred to herein as a "multi-photon bonds." As noted above, the energies of two or more photons are believed to be additive to supply the energy required to break a multi-photon bond only if the photons strike the bond simultaneously. This implicates the arrival rate of photons at a bond site, which is a power flux (energy per unit time per unit area). Further, it is believed that there is a probabilistic nature to multi-photon bond breaking. For a given average power flux over an area of the substrate, there is an average arrival rate of photons at any given bond site. However, the actual arrival rate of photons should be randomly distributed about the average value. Thus, if there is a minimum photon arrival rate (maximum time interval between the photons) at which photon energy addition will take place to allow breaking of a multi-photon bond, an average power flux applied to a given area that corresponds to that minimum arrival rate will expose approximately half of the bond sites in that area exposed to the requisite arrival rate (or a greater rate). Conversely, even if the average power flux is somewhat lower than that required to produce the minimum required photon arrival rate, it is expected that photons will arrive at some of the bond sites within the required interval.

In summary, to remove a given thickness of undesired material from a substrate treatment surface, a minimum total energy flux (a total number of photons of a given energy level per unit area) must be applied to the undesired material. If multi-photon bonds are involved, a certain power flux is also required, and the higher the power flux, the greater the chance that each bond site will be subjected to the requisite photon arrival rate. The selection of a suitable source of energetic photons thus requires an evaluation of the required

photon energy and, for multi-photon bonds, the available power. As will become apparent from the data presented below, to remove oxides and organic films (which have high, and therefore multi-photon, bond energies), preferred photon sources are therefore pulsed UV lasers, which have the highest peak power levels and high photon energies.

A competing consideration limits the energy and power fluxes that may be applied to a substrate treatment surface -- the need to avoid altering the physical properties of the material that is to be left on the surface. In general, changes in the physical properties of a material are caused by increasing the temperature of the material above a threshold level. The change in temperature of the surface of a material caused by the application of radiant energy depends on the heat transfer characteristics of the material and the power and energy fluxes of the applied radiation. Finding the maximum power and energy fluxes usable on a given substrate material will require some experimentation. Prior art laser cleaning techniques that rely on vaporization, ablation, or surface melting provide some guidance in the energy and power fluxes required to produce state changes in substrate materials.

In general, the photons are preferably directed perpendicular to the plane of the portion of the substrate being treated, to maximize the power and energy fluxes at the surface for a given output from the source of photons. However, the photons may be directed at an angle to the substrate as convenient or necessary for implementation of the process in a particular environment. Of course, the energy and power fluxes at the surface will vary with the sine of the angle of incidence of the photons with respect to the plane of the surface, which must be taken into account in selecting the output of the photon source. In some situations, it may be preferable to direct the radiation at an oblique angle to the substrate to preferentially irradiate, and thus remove, peaks in the material to smooth it.

2. Test Apparatus

Two sets of test apparatus (referred to herein as apparatus A and B) were used in the following examples. Apparatus A is illustrated schematically in Fig. 2A. In this apparatus (identified in the figure as 10A), the radiation source is laser 411, which is a pulsed KrF excimer laser, sold by Lambda Physik as model number LEXtra 200. This laser has a wavelength of 248 nm (for a photon energy of 5.01 eV), a maximum output energy per pulse of 600 mJ, and a fixed

pulse duration of 34 ns (for a maximum power per pulse of 17.65 MW). The maximum pulse repetition rate is 30 Hz, producing a maximum average power of 18 W. The radiation beam is 23 mm by 13 mm at the laser output.

Radiation delivery system 450 includes, in the order encountered by radiation beam 11 upon leaving laser 411, an aperture plate 452, 45° turning mirrors 453, 454, 455, and 456, and adjustable focusing lens 457. Aperture plate 452 is a flat plate with a rectangular aperture 6 mm wide and 25 mm long, and is used to block the "tails" of the Gaussian distribution of photons emanating from laser 411, so that the spatial distribution of energy in radiation beam 11 is approximately uniform across a plane perpendicular to the beam. Each of the turning mirrors 453 and 454 are 50 mm, and 455 and 456 are 25 mm, planar mirrors. Adjustable focusing lens 457 is a cylindrical lens with a width of 25 mm, a length of 37 mm, and a focal length of 75 mm. By selecting the height of focusing lens 457 from the surface of substrate 12 and the orientation (concave side up or down) of the lens, the width of the beam spot at the substrate surface is adjusted. All optical elements are anti-reflection coated for 248 nm light.

The delivery system 450 of the second apparatus, Apparatus B (shown in Fig. 2B), is identical to that of Apparatus A except that first turning mirror 453 is omitted (and laser 411 and aperture plate 452 are correspondingly reoriented 90° to point directly toward turning mirror 454) and turning mirror 455 is 50 mm (rather than 25 mm as in Apparatus A). A third apparatus (not used in the experiments) with a simpler (and therefore preferred) optical train is shown in Fig. 2C.

Radiation beam 11 is delivered approximately perpendicular to stage 610 on which substrate 12 is mounted. As shown in Fig. 3, stage 610 can be translated in the X and Y directions (parallel to the plane of the stage, and indicated in Fig. 3 by arrows X and Y). Radiation beam 11 produces a generally rectangular incident radiation region 611 with a width *w* and a length *l*. Region 611 is swept across the surface of substrate 12 by translating stage 610.

Gas delivery system 500 includes a dewar of liquid nitrogen (4500 l capacity) coupled in series to: a dual stage regulator; a moisture/oxygen adsorber (MG Industries Oxisorb, which adsorbs to concentrations of 0.01 ppb); a Millipore Model 304 particle filter (filters to 0.003 μm); a flow meter; a U.S. Filter Membralox filter (filters to 0.001 μm); and thence to a nozzle 551 terminating adjacent region 611. Nozzle 551 discharges a flow of gas 18 across region 611, and remains fixed with respect to region 611 so that stage

610 and substrate 12 translate with respect to it. This gas delivery system is useful for materials that are not sensitive to typical atmospheric gases, and permits a simpler apparatus than is required when it is required or desired to isolate the substrate from the atmosphere during treatment (such as disclosed in the parent application).

A video camera 700 is positioned to view region 611 and thus provide visual data on the results of treatment.

In the illustrated embodiment, stage 610 is first translated longitudinally in the X direction as radiation beam 11 is applied to the surface of substrate 12, producing an elongated rectangular swath 612 on substrate 12 that has been exposed to radiation beam 12. Stage 610 may be indexed back to a starting position and translated in the X direction again so that radiation beam 12 makes another "pass" over swath 612. After one or more passes, stage 610 may be translated laterally in the Y direction a distance approximately equal to length *l*, then translated again through the X direction to form another swath adjacent to the previous swath 612. Thus, the portion of the surface of substrate 12 to be treated is sequentially exposed to radiation beam 11 and the concurrent flow of gas 18.

The energy flux (energy per unit area) applied to any point on the surface of substrate 12 by radiation beam 11 during a single pulse of laser 411 is equal to the energy of the pulse at the surface divided by the area over which that energy is distributed. This can be expressed as:

$$F_{eps} = \frac{E_{ps}}{l \cdot w}$$

where F_{eps} is the pulse energy flux per unit area at the surface (J/cm^2), E_{ps} is the pulse energy at the surface (J), and *l* and *w* are the length and width of region 611 (cm). Similarly, a pulse power flux (F_{pps}) can be calculated as:

$$F_{pps} = \frac{F_{eps}}{t_p}$$

where t_p is the laser pulse duration.

There are energy losses associated with the passage of radiation beam 11 through the optics and aperture plate. Thus, the laser pulse energy at the surface (E_{ps}) is less than the emitted laser pulse energy. The LEXtra 200 laser includes a mini-controller with a pulse energy meter that is useful for recording

This Sheet Has Been Replaced

THIS SHEET HAS BEEN REPLACED

the laser energy output during experiments. However, the internal meter is not extremely accurate. To provide more accurate energy measurements, the test apparatus was calibrated to develop a correction factor to be applied to the internal meter reading to produce a more accurate reading. Accordingly, the laser pulse energy at the surface (E_{ps}) was measured with a Molectron J50 detector head and JD 1000 joulemeter disposed at the location of the treatment surface, and the measured energy reading compared to the internal meter reading of pulse energy (E_{pm}). A correction factor ($R_{correction}$) was thus developed that included both the losses through the optical train and the meter inaccuracies.

$$E_{ps} = E_{pm} \cdot R_{correction}$$

This correction factor is not constant -- it has been found to vary approximately linearly with the output level of the laser. The pulse energy is dependent on the voltage input (V_l) to the laser, which can be adjusted to levels between approximately 17 and 22 kV. The laser output energy (as indicated by the internal meter) varies for a given voltage setting, depending on such factors as the laser gas supply level, so that the voltage cannot be used directly as a measure of pulse energy, but instead the internal meter is read. For convenience, the correction factor is calculated as a function of the voltage setting, then applied to the energy read from the internal meter. The correction factor is of the form:

$$R_{correction} = \frac{1}{m \cdot V_l + b}$$

where **m** is the slope, and **b** is the intercept, of the linear relationship.

The values of the **m** and **b** for the two test apparatuses are shown in Table 2a, below.

Table 2a

Factor	App. A	App. B
b	1.20	0.74
m	0.029	0.066

Thus, the energy per pulse at the treatment surface is:

$$E_{ps} = \frac{E_{pm}}{m \cdot V_l + b}$$

In the illustrated embodiment, a swath 612 is formed from a series of discrete regions 611 (as indicated in Fig. 3 by a second region 611′ shown in phantom). The distance by which region 611′ is offset from region 611 (ΔX) is the product of the time between laser pulses (which is the inverse of the laser pulse repetition rate R_l) and the velocity of translation of stage 610 (the scan velocity v_s). The energy flux delivered to a given point on the substrate is thus the product of the energy flux per pulse (F_{eps}) and the number of laser pulses to which the point is exposed (N_{pl}). The number of pulses N_{pl} is equal to the width w of region 611 divided by the distance ΔX that the stage moves between pulses. Of course, if w is not an integral multiple of ΔX, and each point must receive an integer number of pulses, not every point will receive the same number of pulses. However, the relationship outlined above is reasonably accurate to determine the average energy applied over each swath 612. Further, rather than indexing the stage laterally before beginning another swath 612, the stage can be left in the same lateral position, and another swath 612 applied in the same place, thus making another "pass" over the substrate. The total energy flux delivered (F_{et}) is thus equal to the energy flux per pass (F_{epa}) times the number of passes (N_{pa}).

The average energy flux applied to the surface of substrate 12 can thus be calculated as:

$$F_{epa} = \frac{F_{eps} \cdot R_l \cdot w}{v_s}$$

The total energy flux applied to a given point is obtained by multiplying the energy flux per pass (F_{epa}) by the number of passes:

$$F_{et} = F_{epa} \cdot n_{pa}$$

In the experimental data presented below, the test parameters are identified as shown in Table 2b, below.

Table 2b

Parameter	Description	Units
E_{pm}	Pulse energy (meter)	mJ
E_{ps}	Pulse energy (actual at surface)	mJ
F_{eps}	Energy flux per pulse (at surface)	J/cm^2
F_{pps}	Power flux per pulse (at surface)	MW/cm^2
F_{epa}	Average energy flux per pass	J/cm^2
F_{et}	Total energy flux (over total number of passes)	J/cm^2
l	Length of region 611	mm
N_{pl}	Effective number of pulses striking a point	--
N_{pa}	Number of passes	--
R_g	Gas supply rate	ml/s
R_l	Laser repetition rate	s^{-1}
v_s	Laser scan velocity	km/s
V_l	Laser voltage	KV
w	Width of region 611	mm

In all of the tests, the flow rate of the nitrogen gas across the treatment surface was between 250 and 500 ml/s.

3. Examples of Removal of Oxidation Films

The application of the basic treatment method and apparatus described above with regard to oxidation films is illustrated in the following examples. In each example, a series of treatment "runs" was made on one or more samples of oxidized substrate materials. Each run consisted of treating a single swath 612 across the treatment surface, with one or more passes on the swath. Unless otherwise noted, the samples were treated on a planar surface (such as on the flat face of the sputter targets).

The effectiveness of the treatment is classified according to a six point cleaning rate (R_c) scale, which is explained in Table 3a, below.

Table 3a

Rc	Meaning
1	Removed completely
2	Additional pass required
3	Multiple passes required
4	Poor removal requires change in process conditions
5	Marginal set of conditions
6	No removal

In these tests, the objective was to remove all of the oxide in as few passes as possible (preferably in a single pass) and at the highest stage velocity possible, without damaging the treatment surface. This corresponds to a maximum processing rate for commercial application -- treating a substrate in the least possible time. As discussed above, it is believed that the key process factors are the energy flux per pulse (F_{eps}), the directly related (by the fixed pulse

duration of 34 ns) power flux per pulse (F_{pps}), and the total energy flux (E_{ft}). These process factors were varied by adjusting the pulse energy (E_{ps}), laser pulse repetition rate (R_l), stage velocity (V_s), and incident region width (w).

a. Chromium Sputter Target

In this example, an oxidized chromium sputter target was treated with Apparatus B. The sputter target (as with the other sputter targets used in the experiments described below) was approximately 21 cm long, and slightly oval in shape with a maximum width of 9 cm. A series of nine runs was conducted, the results of which are summarized in Table 3b, below.

Table 3b

Run	Vl	Epm	Eps	Rl	vs	I	w	Feps	Fpps	Npl	Fepa	Npa	Fet	Comments	Rc
2	18	275	143	20	5	23	2.90	0.21	6.3	11.6	2.48	1	2.48	No removal observed	6
3	18	273	142	30	5	23	2.90	0.21	6.2	17.4	3.69	1	3.69	Same as R2, change parameters	6
4	18	279	145	30	5	23	2.05	0.31	9.0	12.3	3.78	1	3.78	No removal observed	6
5	19	348	175	30	5	23	2.05	0.37	10.9	12.3	4.55	1	4.55	No removal observed	6
6	20	390	189	30	5	23	2.05	0.40	11.8	12.3	4.94	1	4.94	Marginal/narrow width	5
7	20	390	189	30	5	23	0.90	0.91	26.9	5.4	4.94	1	4.94	Removed	1
8	19	348	175	30	5	23	0.90	0.84	24.8	5.4	4.55	1	4.55	Removed	1
9	19	351	176	30	10	23	0.90	0.85	25.0	2.7	2.30	1	2.30	Removed, but higher E required	5
10	20	396	192	30	7	23	0.90	0.93	27.3	3.9	3.58	1	3.58	Removed/ fingerprints	1

These data suggest that the power flux per pulse levels applied in the runs spanned a threshold level for multi-photon bonds. Good removal was obtained for values of F_{pps} greater than approximately 12 MW/cm^2, even for constant values of F_{epa} (e.g., from runs 5 to 7) and then for lower values of F_{epa} (e.g., from runs 8 to 10).

b. Erbium Sputter Target

In this example, an oxidized erbium sputter target was treated with apparatus B. The results are summarized in Table 3c, below.

Table 3c

Run	Vl	Epm	Eps	Rl	vs	I	w	Feps	Fpps	Npl	Fepa	Npa	Fet	Comments	Rc
1	18	303	157	20	5	23	2.90	0.24	6.9	11.6	2.73	1	2.73	Bluish oxide remained after 1 pass	1
1a	18	303	157	20	5	23	2.90	0.24	6.9	11.6	2.73	1	2.73	2 passes made, 1 sufficient	1
2	19	354	178	20	10	23	2.90	0.27	7.8	5.8	1.54	1	1.54	1 pass removed oxide	1
3	20	390	192	20	15	23	2.90	0.29	8.5	3.9	1.12	1	1.12	1 pass removed oxide	1
5	20	414	201	20	20	23	2.90	0.30	8.9	2.9	0.87	1	0.87	1pass removed oxide	1
6	20	414	201	20	25	23	2.90	0.30	8.9	2.3	0.70	1	0.70	1 pass removed oxide	1
7	20	423	205	30	50	23	2.90	0.31	9.1	1.7	0.54	1	0.54	Diffraction pattern formed	5

The blue oxide observed is believed to be erbium oxide or some other byproduct of sputtering target interaction. All runs were made with the same beam width of 2.9 mm, while laser pulse energy E_{ps} (and thus, pulse power flux F_{pps}) was slightly increased, and the scan rate significantly increased, from run to run. The first two runs produced partial cleaning, while successive

This Sheet Has Been Replaced



THIS SHEET HAS BEEN REPLACED

runs (at slightly higher **Fpps** values of approximately 8 MW/cm^2) produced good cleaning, with successively lower levels of total energy flux **Fet**, with 0.7 J/cm^2 still providing good removal. This again suggests that a multi-photon bond threshold for **Fpps** is crossed between runs 2 and 3.

In run 7, the stage velocity **Vs** was increased to 50 mm/s in an attempt to reduce the total energy flux to a level too low to remove the oxide. This run produced a "diffraction" pattern of residual oxide lines in the X-direction, suggesting that the regions where the oxide remained had not been exposed to the same energy or power fluxes as the intermediate, cleaned regions. Although the velocity was not so high that successive incident regions (611) were non-overlapping (at the laser repetition rate of 30/s, the substrate moved a distance (1.6 mm) between pulses, which is less than the width of the incident region (2.9 mm)), the observed effect may be indicative of a Gaussian distribution of photons across the X dimension of the incident region 611.

c. Zirconium Sputter Target

In this example, an oxidized zirconium sputter target was treated with Apparatus B. The results are summarized in Table 3d, below.

Table 3d

Run	Vf	Epm	Eps	Rf	Vs	f	w	Feps	Fpps	Npl	Fepa	Npa	Fet	Comments	Rc
1	18	279	145	20	3	23	2.90	0.22	6.4	19.3	4.19	1	4.19	1 pass removed	1
2	18	279	145	20	5	23	2.90	0.22	6.4	11.6	2.52	1	2.52	1 pass removed	1
3	18	279	145	20	5	23	2.90	0.22	6.4	11.6	2.52	2	5.03	2 passes made, 1 pass sufficient	1
4	19	366	184	20	5	23	2.90	0.28	8.1	11.6	3.19	1	3.19	1 pass/cleaned	1
5	19	366	184	20	8	23	2.90	0.28	8.1	7.3	2.00	1	2.00	1 pass removed	1
6	19	366	184	20	10	23	2.90	0.28	8.1	5.8	1.60	1	1.60	1 pass removed	1
7	20	417	202	20	15	23	2.90	0.30	8.9	3.9	1.17	1	1.17	1 pass removed	1
8	20	417	202	20	20	23	2.90	0.30	8.9	2.9	0.88	1	0.88	1 pass removed	1

As with the previous example, all runs were made with the same beam width of 2.9 mm, while pulse energy **Eps** (and thus pulse power flux **Fpps**) was slightly increased, and the scan rate significantly increased, from run to run. Each run produced good cleaning, with successively lower levels of total energy flux, with approximately 0.9 J/cm^2 still providing good removal.

d. Tantalum Holder

In this example, an oxidized tantalum cylindrical holder was treated with Apparatus B. Since the holder was cylindrical, it presented a curved surface for treatment, and the linear translation capability of the stage was not adequate to scan the beam incidence region 611 smoothly over the surface. Accordingly, the holder was manually rotated at a rate at which incidence regions were non-

overlapping. The data shown in Table 3e below therefore applies to the isolated incident regions.

Table 3e

Run	Vf	Epm	Eps	Rf	vs	T	w	Feps	Fpps	Npl	Fepa	Npa	Fet	Comments	Rc
1	19	315	158	30	m	23	0.57	1.20	35.4	1	1.20	1	1.20	Removed oxide, some dwell dama	5
2	19	291	148	30	m	23	0.57	1.13	33.3	1	1.13	1	1.13	Removed oxide, some dwell dama	5
3	18	264	137	30	m	23	0.57	1.04	30.7	1	1.04	1	1.04	Removed oxide, some dwell dama	5
4	18	267	138	30	m	23	1.2	0.50	14.8	1	0.50	1	0.50	Removed oxide, no damage	1
5	19	327	164	30	m	23	1.2	0.59	17.5	1	0.59	1	0.59	Removed oxide, no damage	1
6	20	351	173	30	m	23	1.2	0.63	18.5	1	0.63	1	0.63	Removed oxide, no damage	1
7	20	414	201	30	m	23	1.2	0.73	21.4	1	0.73	1	0.73	Removed oxide, no damage	1

The data show that an energy flux of approximately 0.5 J/cm^2 is adequate to remove the tantalum oxide film from the underlying tantalum substrate. At a power flux of more than approximately 22 MW/cm^2 (in Runs 1-3), some dwell damage was produced in that blackening of the substrate surface was observed.

e. Tungsten Crucible

In this example, an oxidized tungsten crucible was treated with apparatus B. The crucible was approximately 10 cm long and 2.5 cm wide, had an elongated dish shape (approximately semi-cylindrical in the region treated). The data shown in Table 3f below include runs 1-3 on the inside surface (concave) and 4-7 on the outside (convex).

Table 3f

Run	Vf	Epm	Eps	Rf	vs	T	w	Feps	Fpps	Npl	Fepa	Npa	Fet	Comments	Rc
1	19	330	165	30	5	23	0.63	1.14	33.6	3.8	4.32	1	4.32	1 pass removed	1
2	19	330	165	30	5	23	0.63	1.14	33.6	3.8	4.32	2	8.63	1 pass removed, 2nd pass made b	1
3	19	330	165	30	8	23	0.63	1.14	33.6	2.4	2.70	1	2.70	1 pass removed	1
4	21	414	195	30	8	23	0.63	1.34	39.5	2.4	3.17	1	3.17	1 pass removed	1
5	21	405	190	30	12	23	0.63	1.31	38.7	1.6	2.07	1	2.07	1 pass removed	1
6	22	438	200	30	15	23	0.63	1.38	40.6	1.3	1.74	1	1.74	1 pass removed	1
7	22	429	196	30	20	23	0.63	1.35	39.7	0.9	1.28	1	1.28	1 pass removed	1

These data show that tungsten oxide can be removed at an energy flux as low as approximately 1.3 J/cm^2, while the substrate is not damaged at power flux rates as high as approximately 41 MW/cm^2.

f. Molybdenum Alloy Masks

In this example, three oxidized masks (used in the production of wire pattern packaging areas of silicon chips) made of molybdenum alloy were treated with apparatus A. The data from the treatment of the masks are summarized in Table 3g, below.

Table 3g

Run	Vf	Epm	Eps	Rf	Vs	T	W	Feps	Fpps	Npl	Fepa	Npa	Fet	Comments	Rc
Sample 1 = 125 mm mask															
4	22	528	285	30	5	23	1.3	0.95	28.1	7.8	7.45	2	14.89	2 passes required	2
5	22	528	285	30	2	23	1.3	0.95	28.1	19.5	18.62	2	37.23	2 passes required	2
6	20	450	251	30	2	23	1.3	0.84	24.7	19.5	16.39	2	32.77	2 passes required, brownish residu	4
7	18	324	187	30	2	23	1.3	0.63	18.4	19.5	12.20	2	24.40	2 passes required	4
8	20	528	295	30	5	23	1.3	0.99	29.0	7.8	7.69	2	15.38	2 passes required, no residue	2
9a	20	528	295	30	2	23	1.3	0.99	29.0	19.5	19.23	1	19.23	1 pass, brownish residue	4
9b	20	528	295	30	5	23	1.3	0.99	29.0	7.8	7.69	2	15.39	2 passes required	2
Sample 2 = 82 mm mask															
1	22	525	284	30	2	23	0.6	2.06	60.5	9.0	18.51	1	18.51	1 pass removed	1
Sample 3 = 82 mm mask															
1	22	525	284	30	5	23	0.6	2.06	60.5	3.6	7.40	1	7.40	1 pass removed	1

Higher total energy fluxes (F_{et}) were required to remove the oxidation from the larger mask used as sample 1 than for the other two masks. On the first mask, the treatment left a brownish residue on runs 6 and 9a, which may be indicative of damage to the remaining material. The data also suggest that F_{pps} did not exceed a multi-photon bond power threshold in Sample 1 (where F_{pps} was less than approximately 30 MW/cm^2) but did exceed the threshold in Samples 2 and 3 (F_{pps} over approximately 60 MW/cm^2).

g. Steel Ruler

In this example, an oxidized steel ruler was treated with apparatus A. The data from the treatment of the ruler are summarized in Table 3h, below.

Table 3h

Run	Vf	Epm	Eps	Rf	Vs	T	W	Feps	Fpps	Npl	Fepa	Npa	Fet	Comments	Rc
1	17	168	99	30	1	23	3	0.14	4.2	90.0	12.87	1	12.87	Removed	1
2a	17	180	106	30	5	23	3	0.15	4.5	18.0	2.76	1	2.76	Partial removal	3
2b	18	303	175	30	5	23	3	0.25	7.5	18.0	4.56	1	4.56	Partial removal	3
2c	20	441	246	30	5	23	3	0.36	10.5	18.0	6.42	1	6.42	Removed	2
3	19	387	220	30	3	23	3	0.32	9.4	30.0	9.55	1	9.55	Removed	1
4	19	396	225	30	10	23	3	0.33	9.6	9.0	2.93	1	2.93	Removed	1
5	19	396	225	30	20	23	3	0.33	9.6	4.5	1.47	1	1.47	Removed little	4
6	19	385	219	30	15	23	3	0.32	9.3	6.0	1.90	1	1.90	Partial removal	3
7	19	390	221	30	12	23	3	0.32	9.4	7.5	2.41	2	4.81	2 passes required	2

The data indicate that the multi-photon bond power flux threshold was crossed between runs 2b and 2c - 7 (thus being between approximately 7.5 and 9.3 MW/cm^2). Further, although F_{pps} was sufficiently high in runs 5-7, the total energy flux F_{et} was not high enough (at approximately 1.5 to 1.9 J/cm^2) to remove all the oxide.

h. Nickel / Iron Alloy Sputter Target

In this example, a sputter target was treated with Apparatus B. The sputter target was formed of an alloy of nickel and approximately 19% iron. The data from the treatment of the target are summarized in Table 3i, below.

Table 3i

Run	Vl	Epm	Eps	Rl	Vs	T	W	Feps	Fpps	Npl	Fepa	Npa	Fet	Comments	Rc
1	18	267	138	30	7	23	0.9	0.67	19.7	3.9	2.58	2	5.16	2 passes removed all	2
3	20	354	175	30	7	23	0.9	0.84	24.8	3.9	3.25	2	6.51	2 passes removed all	2
4	20	354	175	30	7	23	0.9	0.84	24.8	3.9	3.25	3	9.76	3 passes removed all	3
5	20	363	176	30	10	23	0.9	0.85	25.0	2.7	2.30	3	6.90	3 passes removed all	3
7	20	387	188	30	12	23	0.9	0.91	26.7	2.3	2.04	4	8.17	4 passes, pinkish surface	5
8	20	375	182	30	12	23	2.5	0.32	9.3	6.3	1.98	2	3.96	2 passes removed all	2
9	20	387	188	30	15	23	2.5	0.33	9.6	5.0	1.63	1	1.63	1 pass removed all	1
10	21	426	200	30	20	23	2.5	0.35	10.2	3.8	1.31	1	1.31	1 pass removed all	1

On runs 1, 3, 4, 5, and 7, a pinkish light interaction was observed during treatment, and on run 7 the surface was left with a slight pinkish cast. One possible explanation is that the substrate was damaged at the higher pulse power flux of approximately 20 to 26 MW/cm^2. Alternatively, the higher fluxes may have induced a change in the composition of the oxide layer to a composition more difficult to remove (i.e., with higher bond energies). This is consistent with the observation that more total energy flux was required in those runs to remove all of the oxide layer. In contrast, in runs 8-10, lower pulse power fluxes ranging from approximately 9 to 10 MW/cm^2 were adequate to remove the oxidation (with approximately 1.3 or more J/cm^2 total energy flux **Fet**).

i. Nickel Alloy Strip

In this example, a strip of oxidized nickel alloy was treated with Apparatus A. The nickel alloy was of an undetermined composition. The data from the treatment of the strip are summarized in Table 3j, below.

Table 3j

Run	Vl	Epm	Eps	Rl	Vs	T	W	Feps	Fpps	Npl	Fepa	Npa	Fet	Comments	Rc
1	20	397	224	30	2	23	0.5	1.94	57.2	10.0	19.44	1	19.4	1 pass	5
2	22	485	262	30	2	23	0.5	2.28	67.1	10.0	22.80	1	22.8	1 pass	5
3	22	489	264	30	2	23	0.5	2.30	67.6	10.0	22.99	1	23.0	1 pass	5
4	22	489	264	30	1	23	0.5	2.30	67.6	15.0	34.48	3	103.4	3 passes, brown residue	5
5	19	378	215	30	1	23	0.5	1.87	54.9	15.0	27.99	1	28.0	1 pass, partial removal	5
7	20	414	231	30	1	23	0.82	1.23	36.1	24.6	30.15	7	211.1	7 passes, removal by layers	2
6a	20	438	243	30	1	23	0.82	1.29	38.0	24.6	31.74	1	31.7	1 pass, partial removal	3
6b	21	462	254	30	1	23	0.82	1.35	39.8	24.6	33.10	1	33.1	1pass, oxide remaining (6a)	2

Visual observation of run 4 revealed a brownish residue, perhaps indicative of damage to the remaining material. Visual inspection of run 7 between passes indicated that the oxide was removed incrementally on each pass. Further, it appears that the multi-photon bond power flux threshold is approximately 50 MW/cm^2 -- some cleaning was achieved at lower values of **Fpps**, but higher values of **Fet** were required to remove all oxide.

j. Copper Penny

In this example, oxidized U.S. pennies (copper) were treated with Apparatus B. Three pennies were treated, with one run made on each of the obverse and reverse sides of each penny (the runs are paired for each coin -- runs 1 and 2 are for the same coin, 3 and 4 for the next, etc.). The data from the treatment of the pennies are summarized in Table 3k, below.

Table 3k

Run	Vf	Epm	Eps	Rf	vs	f	w	Feps	Fpps	Npl	Fepa	Npa	Fet	Comments	Rc
1	20	348	169	30	5	23	2.1	0.35	10.3	12.6	4.41	4	17.6	Removed in 4 passes	3
2	18	243	126	30	5	23	2.1	0.26	7.7	12.6	3.29	4	13.2	Removed in 4 passes	3
3	19	306	153	30	5	23	2.1	0.32	9.3	12.6	4.00	15	60.0	15 passes/ Patina VG	3
4	20	351	170	30	5	23	2.1	0.35	10.4	12.6	4.44	30	133.3	30 passes/ patina VG	3
5	20	348	169	30	5	23	1.1	0.67	19.6	6.6	4.41	15	66.1	15 passes/Patina VG	3
6	20	348	169	30	5	23	1.1	0.67	19.6	6.6	4.41	15	66.1	Damaged/15 passes	6

These data show effective removal of copper oxide at pulse power flux levels of approximately 8 to 20 MW/cm^2 (requiring total energies of approximately 13 to 130 J/cm^2 to remove all or nearly all of the oxide), while higher pulse power fluxes (20 MW/cm^2 in run 6) may damage the surface.

k. Nickel Alloy Quarter Dollar

In this example, oxidized U.S. quarter dollar coins (with nickel alloy surface layer) were treated with Apparatus B. Two quarters were treated, with one run made on each of the obverse and reverse sides of each quarter (as above, runs 1 and 2 are for the two sides of one coin, and 3 and 4 for the other). The data from the treatment of the quarters are summarized in Table 3l, below.

Table 3l

Run	Vf	Epm	Eps	Rf	vs	f	w	Feps	Fpps	Npl	Fepa	Npa	Fet	Comments	Rc
1	21	384	181	30	5	23	2.1	0.37	11.0	12.6	4.71	2	9.4	1 pass removed, 2nd not required	1
2	21	378	178	30	5	23	2.1	0.37	10.8	12.6	4.64	4	18.6	Removed in 4 passes	3
3	21	348	164	30	5	23	2.1	0.34	10.0	12.6	4.27	3	12.8	Removed in 3 passes	3
4	21	348	164	30	5	23	2.1	0.34	10.0	12.6	4.27	3	12.8	Removed in 3 passes	3

These data show that the oxide layer on the nickel alloy surface of the quarters was effectively removed at pulse power fluxes of approximately 10 to 11 MW/cm^2, in 1 to 4 passes.

4. Removal of Organic Films

The application of the treatment method and apparatus described above with regard to organic films is illustrated in the following examples. Unless otherwise noted, the tests were conducted in the same manner, and the data shown is in the same format and units, as the oxidation film removal examples. All tests were conducted with Apparatus A.

a. Paint on Stainless Steel

In this example, a 304 stainless steel disk with an Ra finish of 20 was coated (by spraying) with conventional metal-application paint (in this case, paint sold under the tradename "RUSTOLEUM"). The results of the treatment are summarized in Table 4a, below.

Table 4a

Run	Vf	Epm	Eps	Rf	Vs	f	w	Feps	Fpps	Npl	Fepa	Npa	Fet	Comments	Rc
1	18	318	183	30	3	23	1.00	0.80	23.4	10.0	7.97	2	15.9	2 passes	2
3	18	315	182	30	3	23	1.00	0.79	23.2	10.0	7.89	2	15.8	2 passes	2
5	22	501	271	30	3	23	1.00	1.18	34.6	10.0	11.78	3	35.3	3 passes	3
8	18	318	184	30	1	23	1.00	0.80	23.5	30.0	23.95	2	47.9	2 passes	2
9	18	318	184	30	1	23	3.00	0.27	7.8	90.0	23.95	7	167.6	7 passes	3,4
10	22	510	276	30	3	23	3.00	0.40	11.8	30.0	11.99	2	24.0	2 passes	2
11	22	510	276	30	2	23	3.00	0.40	11.8	45.0	17.98	2	36.0	2 passes	2
12	22	516	279	30	2	23	3.00	0.40	11.9	45.0	18.19	2	36.4	2 passes	2
13	22	522	282	30	2	23	3.00	0.41	12.0	60.0	24.54	1	24.5	1 pass removed	1
14	22	522	282	30	2	23	3.00	0.41	12.0	52.9	21.65	1	21.7	1 pass removed	1
15	22	522	282	30	2	23	3.00	0.41	12.0	56.3	23.01	1	23.0	1 pass removed	1
16	22	522	282	30	2	23	2.10	0.58	17.2	39.4	23.01	1	23.0	1 pass removed	1
17	22	522	282	30	3	23	2.10	0.58	17.2	21.0	12.27	3	36.8	3 passes	3
18	22	522	282	30	2	23	3.00	0.41	12.0	50.0	20.45	1	20.4	1 pass removed	1

These data indicate that a relatively thick organic film can be effectively removed from a stainless steel substrate with no observed damage to the substrate. It appears that the paint film required a total energy flux (F_{et}) of at least approximately 16 J/cm^2, and more total energy (167 J/cm^2) at a lower pulse power flux (approximately 8 MW/cm^2 in run 9). This may also be indicative of a power flux threshold of between 8 and 12 MW/cm^2.

b. Organic Films on Quartz Wafer Boat

In this example, various organic films were applied to the surface of a generally cylindrical, slotted, quartz wafer boat (used to transport semiconductor wafers through furnaces). Three types of organic films were applied: fingerprints (human body oil); paint (blue and red); and "magic marker." The quartz wafer boat was then treated with Apparatus A. The results of the treatment are summarized in Table 4b, below.

Table 4b

Run	Vf	Epm	Eps	Rf	Vs	t	w	Feps	Fpps	Npl	Fepa	Npa	Fet	Comments	Rc
Sample 1 = Fingerprint															
7	18	368	224	30	3	23	4.4	0.22	6.5	44.0	9.74	2	19.48	Residual left	2
8	18	285	165	30	2	23	4.4	0.16	4.8	66.0	10.73	2	21.46	Residual left	2
9	20	396	221	30	2	23	4	0.24	7.1	60.0	14.42	2	28.84	Residual left	2
10	22	450	243	30	2	23	4	0.26	7.8	60.0	15.87	1	15.87	Fingerprint removed	1
12	18	273	158	30	1	23	2.2	0.31	9.2	66.0	20.56	1	20.56	Fingerprint removed	1
13	18	273	158	30	3	23	2.2	0.31	9.2	22.0	6.85	2	13.71	Residual left	2
15	18	273	158	30	2	23	2.2	0.31	9.2	33.0	10.28	1	10.28	Fingerprint removed	1
Sample 2 = paint (blue)															
1	18	300	173	30	2	23	2.2	0.34	10.1	33.0	11.30	1	11.30	Red paint removed	1
2	18	300	173	30	2	23	2.2	0.34	10.1	33.0	11.30	1	11.30	Red paint removed	1
3	18	300	173	30	6	23	2.2	0.34	10.1	11.0	3.77	1	3.77	Red paint removed	1
Sample 3 = Marker															
4	18	300	173	30	6	23	2.2	0.34	10.1	11.0	3.77	2	7.53	Two passes required	2
5	18	300	173	30	4	23	2.2	0.34	10.1	16.5	5.65	2	11.30	Two passes required	2
6	18	360	208	30	4	23	2.2	0.41	12.1	16.5	6.78	2	13.56	Two passes required	2
7	22	561	303	30	4	23	3.4	0.39	11.4	25.5	9.89	2	19.78	Two passes required	2
Sample 4 = paint (blue)															
10	18	300	174	30	7	23	0.5	1.51	44.4	2.3	3.49	1	3.49	Blue paint removed	1
12	18	324	187	30	10	23	0.5	1.63	47.8	1.5	2.44	1	2.44	Blue paint removed	1
Sample 5 = fingerprint															
13	18	320	185	30	10	23	0.5	1.61	47.2	1.5	2.41	2	4.82	Residual observed	2
14	18	324	187	30	7	23	0.5	1.63	47.8	2.1	3.49	1	3.49	Fingerprint removed	1

These data indicate that the organic films can be effectively removed without damage to the quartz substrate, at various energy levels in one or more passes.

c. Organic Films on Fused Silica Quartz Window

In this example, various organic films were applied to the surface of a generally planar, fused silica quartz optical window. Two types of organic films were applied: fingerprints (human body oil), with and without additional dust; and blue paint. The window was then treated with Apparatus A. The results of the treatment are summarized in Table 4c, below.

This Sheet Has Been Replaced



THIS SHEET HAS BEEN REPLACED

Table 4c

Run	Vl	Epm	Eps	Rf	Vs	T	w	Feps	Fpps	Npl	Fepa	Npa	Fet	Comments	Rc
Sample 1 = Fingerprint / dust															
1	18	336	194	30	4	23	3.5	0.24	7.1	26 3	6.33	1	6.33	Dust removed, residual FP	1
2	19	435	247	30	4	23	3.5	0.31	9.0	26.3	8.05	1	8.05	Better removal observed	5
3	19	400	228	30	4	23	1.8	0.55	16.2	13.5	7.44	1	7.44		6
1	22	546	295	30	5	23	1.8	0.71	21.0	10.8	7.70	2	15.40	Some residual	2
2	22	549	297	30	5	23	1	1.29	38.0	6.0	7.74	2	15.49	Some residual	2
4	22	546	295	30	5	23	0.5	2.57	75.5	3.0	7.70	1	7.70	FP and dust removed	1
5	22	529	286	30	10	23	0.5	2.49	73.1	1.5	3.73	2	7.46	Some residual	2
6	22	549	297	30	7	23	0.5	2.58	75.9	2.1	5.53	2	11.06	Some residual, 90% removed	2
7	22	549	297	30	7	23	0.5	2.58	75.9	2.3	5.96	1	5.96	FP and dust removed	1
8	18	348	201	30	7	23	0.5	1.74	51.3	2.3	4.02	2	8.05	Residual FP	2
8a	19	420	239	30	7	23	0.5	2.08	61.2	2.3	4.80	2	9.60	FP residual	2
9	20	480	268	30	7	23	0.5	2.33	68.5	2.3	5.38	2	10.76	Some FP residual	2
Sample 2 = Paint (blue)															
10	18	300	174	30	7	23	0.5	1.51	44.4	2.3	3.49	1	3.49	Blue paint removed	1
12	18	324	187	30	10	23	0.5	1.63	47.8	1.5	2.44	1	2.44	Blue paint removed	1
Sample 3 = Fingerprint															
13	18	320	185	30	10	23	0.5	1.61	47.2	1.5	2.41	2	4.82	Some residual	2
14	18	324	187	30	7	23	0.5	1.63	47.8	2.1	3.49	1	3.49	Fingerprint removed	1

These data again show that the organic films can be effectively removed without damage to the quartz substrate, at various energy levels in one or more passes.

5. Removal of Polycrystalline Silicon from Quartz

The application of the treatment method and apparatus described above with regard to polycrystalline silicon on quartz is illustrated in the following examples. The interior surface of a cylindrical quartz furnace tube was treated to remove a layer of polycrystalline silicon that recondensed on the surface during treatment of silicon dies passed through the furnace tube. A partial radial section of the tube was treated with Apparatus A. A series of test runs was conducted, the results of which are shown in Table 5a, below. In the test apparatus, incident region 611 was continuously scanned across a swath 612 with a width (X dimension) of between 0.9 and 2.0 mm for scan times as long as tens of minutes. The number of passes (N_{pa}) shown in Table 5a is therefore:

$$N_{pa} = \frac{t_{scan} \cdot V_s}{W_{swath}}$$

where w_{swath} is the width of the swath 612, t_{scan} is the time duration of the scan, and V_l is the laser scan velocity.

It was observed that at high energy and power flux levels, the point at which the polycrystalline silicon layer was completely removed, and the quartz thus exposed to the radiation, was accompanied by fluorescence of the quartz.

This Sheet Has Been Replaced



THIS SHEET HAS BEEN REPLACED

This provided a convenient visual indicator of the time at which breakthrough was achieved.

Table 5a

Run	Vl	Epm	Eps	Rl	vs	I	w	Feps	Fpps	Npl	Fepa	Npa	Fet	Comments	Rc
5,67	21	507	280	30	1	23	0.37	3.29	97	22.2	73.01	2595	189438	Observe reduction of Si film	5
8	21	507	281	30	1	23	0.37	3.30	97	22.2	73.25	3405	249447	Fluorescense; surface roughened	5
9	22	535	299	30	1	23	0.25	5.13	151	7.4	37.73	14694	554348	Layers removed from quartz	5
10	22	540	292	30	3	23	0.25	5.16	152	2.5	12.69	2204	27976		5
11	20	534	298	30	3	23	0.3	4.32	127	3.0	12.96	3000	38892	Thinning of Si film	5
11a	20	546	305	30	3	23	0.3	4.42	130	3.0	13.26	4200	55673	Quartz damaged at 6.3 min	5
11b	19	399	227	30	3	23	0.3	3.29	97	3.0	9.88	9000	88932	Thinning of Si film	5
11c	19	405	231	30	3	23	0.3	3.34	98	3.0	10.03	1350	13540	Some quartz damage	5
11d	18	351	203	30	3	23	0.3	2.94	86	3.0	8.81	4350	38326	Good removal rate	5
12a	18	537	310	30	3	23	0.25	5.50	162	2.5	13.48	1800	24263		5
12b	18	450	260	30	3	23	0.25	4.61	136	2.5	11.30	4430	50042	Fluorescense	5
12c	18	400	231	30	3	23	0.25	4.10	121	2.5	10.04	3504	35187	Significant Si removal	5
12d	18	386	229	30	3	23	0.25	4.06	119	2.5	9.94	1550	15409	Some quartz damage	5
12e	18	375	217	30	3	23	0.25	3.84	113	2.5	9.41	617	5809		5
12f	18	375	217	30	3	23	0.25	3.84	113	2.5	9.41	3130	29461		5
12g	18	375	217	30	3	23	0.25	3.84	113	2.5	9.41	3321	31259		5
12h	18	375	217	30	3	23	0.25	3.84	113	2.5	9.41	367	3458		5
12i	18	375	217	30	3	23	0.25	3.84	113	2.5	9.41	1102	10374		5
12j	18	375	217	30	3	23	0.25	3.84	113	2.5	9.41	1638	15422		5
13a	18	528	305	30	3	15	0.24	8.47	249	2.4	20.32	1275	25911		5
13b	18	452	261	30	3	15	0.24	7.25	213	2.4	17.40	1650	28705	Significant Si removal	5
13c	18	441	255	30	3	15	0.24	7.07	208	2.4	16.97	825	14003		5
13d	18	447	258	30	3	15	0.24	7.17	211	2.4	17.20	1403	24129		5
13e	18	447	258	30	3	15	0.24	7.17	211	2.4	17.20	263	4516		5
13f	18	447	258	30	3	15	0.24	7.17	211	2.4	17.20	2385	41033	Significant Si removal	5
13g	18	372	215	30	3	15	0.24	5.97	175	2.4	14.32	1088	15571		5
13h	18	372	215	30	3	15	0.24	5.97	175	2.4	14.32	1260	18041		5
13i	18	342	197	30	3	15	0.24	5.48	161	2.4	13.16	2228	29321	Si removed completely	5
14a	23	525	282	30	3	15	0.24	7.82	230	2.4	18.77	1238	23231		5
14b	23	525	282	30	3	15	0.24	7.82	230	2.4	18.77	300	5632		5
14c	23	525	282	30	3	15	0.24	7.82	230	2.4	18.77	323	6054		5
14d	23	525	282	30	3	15	0.24	7.82	230	2.4	18.77	518	9715		5
14e	23	525	282	30	3	15	0.24	7.82	230	2.4	18.77	525	9856		5
14f	23	525	282	30	3	15	0.24	7.82	230	2.4	18.77	150	2816		5
14g	23	525	282	30	3	15	0.24	7.82	230	2.4	18.77	503	9433		5
14h	23	525	282	30	3	15	0.24	7.82	230	2.4	18.77	150	2816		5
14i	23	525	282	30	3	15	0.24	7.82	230	2.4	18.77	630	11827		5
14j	23	525	282	30	3	15	0.24	7.82	230	2.4	18.77	120	2253		5
14k	23	525	282	30	3	15	0.24	7.82	230	2.4	18.77	75	1408		5
14l	23	525	282	30	3	15	0.24	7.82	230	2.4	18.77	83	1549		5
14m	23	525	282	30	3	15	0.24	7.82	230	2.4	18.77	75	1408		5
14n	23	525	282	30	3	15	0.24	7.82	230	2.4	18.77	90	1690	Si removed completely	5
14e2	19	399	225	30	5	15	0.24	6.26	184	1.4	9.02	1763	15890		5
b2	19	342	196	30	5	15	0.24	5.44	160	1.4	7.89	2500	19579	Large area of Si removed	5
c2	18	297	172	30	5	15	0.24	4.77	140	1.4	6.87	7350	50497	Thinning of Si film	5
d2	18	318	183	30	5	15	0.24	5.09	150	1.4	7.33	1650	12097		5
e2	18	318	183	30	5	15	0.24	5.09	150	1.4	7.33	1800	13196		5
f2	18	318	183	30	5	15	0.24	5.09	150	1.4	7.33	2700	19794	Thinning of Si film	5

The data indicate that polycrystalline silicon can be removed from the surface of quartz.

6. Surface Topography Modification

From the description and data presented above, it is evident that substantially continuous layers of material can be selectively removed from a

substrate surface. The thickness of material removed from the substrate is a function of the bond energies of the material to be removed, the energy (wavelength) of the applied photons, the energy flux of the applied photons and, for multi-photon bonds, the power flux. Energy and power fluxes can be also be referred to as a spatial and temporal concentration of the applied photons. For a given material, it is therefore possible to determine the temporal and spatial photon concentration required to remove a layer of the material of a desired thickness. As described above for oxidation and organic and inorganic film layers, the layers of material can be removed uniformly over an extensive area of substrate by scanning the radiation across the substrate surface. However, by suitably controlling the removal process, it is possible to selectively (e.g., non-uniformly) remove material from relatively small areas to modify the topography of the substrate surface. The topography modification may be in the nature of micromachining to create nanostructures or may be to planarize a rough surface.

a. Creation of Nanostructures

Nanostructures can be built up by selectively removing substrate material from around structures that are to be elevated above the surrounding surface. This can be done in two ways. The first is conceptually equivalent to a milling operation on conventional structure scales. To continue this analogy, the incident radiation region 611 can be considered to be the milling tool, with the size of region 611 (corresponding to the size of the milling tool) dictating the smallest width of material that can be removed. Similarly, the lateral resolution of the control over the movement of region 611 (whether by traversing a stage such as 610 or moving focusing optics) dictates the scale and accuracy with which structures can be created. The depth of the "cut" achieved on each "pass" of the incident region is dictated by the energy and power fluxes, and the total depth of material removed is further controlled by the number of passes made over the surface.

The creation of a simple nanostructure is illustrated schematically in Fig. 5. The nanostructure is an "island" 720 surrounded by a "trench" 710 formed in the surface of substrate 12. Trench 710 is formed by traversing incident radiation region 611 (shown schematically as a circular region, although it may be rectangular as illustrated in the experimental apparatus above) around the perimeter of the region in which island 720 is desired to be created. The

This Sheet Has Been Replaced



THIS SHEET HAS BEEN REPLACED

traversal of region 611 is indicated by another position of the region (611') in another portion of the trench 710.

An alternative micromachining technique is to use a mask to define the areas of material to be removed, overlay the mask on or above the substrate treatment surface, and scan the incident radiation region uniformly across the mask. Of course, the mask and substrate materials must be selected, and the photon power and energy flux levels set, to remove the undesired material from the substrate treatment surface without damaging the mask so much as to render it unusable before the substrate micromachining is completed.

Techniques for the use of masks (such as for photolithography) and the control over laser incident region size and position have been demonstrated in the prior art to be controllable on the spatial scale of interest in the micromachining of nanostructures. The way in which those techniques would be applied to use the present invention for micromachining will therefore be evident to the artisan and are not described in more detail here.

b. Planarization

A substrate surface may also be "planarized" by selective application of radiation, as illustrated schematically in Fig. 8. If, as shown in Fig. 8, the substrate 12 has a layer 12b (such as an oxide layer, although the layer may simply be a surface layer of the substrate) that is non-uniform in thickness (indicated by regions 12b1, 12b2, 12b3, etc.), it may be desirable in certain applications to remove some, but not all, of the oxide layer, and to make the oxide layer a more uniform thickness (indicated by dashed line 12c). This can be accomplished by selective application of the radiation to each of the regions 12b1, etc. to remove a thickness of material equal to the difference between the pre-treatment thickness and the desired thickness. The radiation can be scanned in raster fashion across the surface of the substrate, and the desired amount of material removed from each region.

To accurately determine the pre-treatment thickness of layer 12b (and, optionally, to confirm the desired post-treatment thickness), it is desirable to use an in-situ film thickness measurement technique. Suitable known techniques include reflection or beam profile spectrophotometry or ellipsometry. (Such techniques are described in P. Burggraaf, "Thin Film Metrology: Headed for a New Plateau" Semiconductor International March 1994). An actual thickness in each region can then be compared to the desired thickness to determine a thickness of undesired material. The appropriate radiation energy and power

This Sheet Has Been Replaced



THIS SHEET HAS BEEN REPLACED

fluxes can then be applied to the region to eliminate the thickness of undesired material. A post-treatment thickness measurement can be made to confirm that the actual thickness is equal to the desired thickness, and an additional treatment applied if required. This process can be continued iteratively for each region.

A suitable apparatus is illustrated schematically in Fig. 6. Substrate 12 is disposed on movable stage 610, and radiation 11 from source 410 is applied via delivery optics 450. Thickness information 805 is collected by ellipsometer 810 (or other suitable thickness measuring device). A controller 850 receives thickness information 185 from ellipsometer 810, and outputs radiation control signal 820 to source 410 and position control signals 825 to stage 610 or signals 830 to steerable optics 450.

c. Oblique Irradiation

A substrate treatment surface with non-uniform thickness may also be "smoothed" by applying radiation at an oblique angle to the mean substrate surface, as illustrated schematically in Fig. 7. The rough surface layer 12b of substrate 12 (shown in cross-section in Fig. 7) has surface elements oriented in many directions (or at many angles relative to the overall plane of the treatment surface). Since the incident energy and power fluxes from radiation 11 varies with the sine of the incident angle on the surface element, the elements that are most normal to the radiation will be exposed to higher fluxes than elements that are oblique. Further, elements that are shadowed (not exposed) will receive no flux. Thus, the cumulative effect of application of radiation 11 will be to remove relatively more material from normally-oriented surface elements, and less from oblique or shadowed elements (indicated schematically by successive post-treatment surface contours 12b', 12b"). This in turn will reduce the average roughness of the surface layer 12b.

What Is Claimed Is:

1. A method for selectively removing a substantially continuous layer of undesired material from a treatment surface of a substrate without affecting the physical properties of desired material to be left on the treatment surface adjacent to or underlying the undesired material, comprising the steps of:

introducing across said undesired material a flow of gas substantially inert to said substrate; and

irradiating said undesired material with energetic photons in a spatial and temporal concentration sufficient to release the undesired material from the treatment surface and insufficient to alter the physical properties of the desired material.

2. A method for selectively removing a substantially continuous layer of undesired material from a treatment surface of a substrate without affecting the physical properties of desired material to be left on the treatment surface adjacent to or underlying the undesired material, comprising the steps of:

introducing across said undesired material a flow of gas substantially inert to said substrate; and

irradiating said undesired material with energetic photons at energy and power flux levels sufficient to break the constituent bonds of the undesired material and insufficient to raise the temperature of the desired material to a level which would produce changes in the physical properties of the desired material.

3. A method for creating structures in a treatment surface of a substrate by selectively removing undesired material from the treatment surface without affecting the physical properties of desired material to be left on the treatment surface adjacent to or underlying the undesired material, comprising the steps of:

introducing across said undesired material a flow of gas substantially inert to said substrate;

selectively irradiating said undesired material with energetic photons at power and energy flux levels sufficient to remove undesired material from the treatment surface and insufficient to alter the physical properties of the desired material; and

This Sheet Has Been Replaced

* C L M S *

THIS SHEET HAS BEEN REPLACED

removing from the treatment surface a thickness of undesired material in a spatial pattern required to form a desired structure.

4. The method of claim 3 further comprising the steps of:
producing on said undesired material an incident region of irradiation having dimensions appropriate to the formation of the desired structure; and
indexing said incident radiation region across said spatial pattern.

5. The method of claim 3 further comprising the steps of:
disposing between the treatment surface and a source of said energetic photons a mask corresponding to said spatial pattern; and
substantially uniformly irradiating said spatial pattern on the treatment surface through said mask.

6. A method for planarizing a treatment surface of a substrate having a plurality of contiguous regions having differing thicknesses of material by selectively removing differing thicknesses of material from each region, without affecting the physical properties of the remaining material, comprising the steps of:
determining for each region an existing thickness of material in the region;
comparing each existing material thickness to a desired material thickness and determining therefrom a thickness of undesired material; and
for each region having an undesired thickness of material, selectively irradiating said region with energetic photons having a spatial and temporal concentration sufficient to remove said thickness of material from the region and insufficient to alter the physical properties of the remaining material.

7. The method of claims 1, 2, 3, or 6, wherein said material to remain on the treatment surface is a metal and said material to be removed is an oxide of said metal.

8. The method of claims 1, 2, 3, or 6, wherein said material to remain on the treatment surface is inorganic and said material to be removed is organic.

THIS SHEET HAS BEEN REPLACED

* C L M S *

This Sheet Has Been Replaced

9. The method of claims 1, 2, 3, or 6, wherein said material to remain on, and said material to be removed from, the treatment surface have substantially the same chemical composition.

10. The method of claims 1, 2, 3, or 6, wherein said material to remain on the treatment surface is quartz and said material to be removed is polycrystalline silicon.

11. A method for reducing the roughness of a treatment surface having an average surface plane and having individual surface elements disposed at angles to the average surface plane, without affecting the physical properties of the treatment surface, comprising the steps of:

introducing across said treatment surface a flow of gas substantially inert to said treatment surface; and

irradiating said treatment surface with energetic photons at energy and power flux levels sufficient to break the constituent bonds of the treatment surface material and thereby liberate the material from the treatment surface, and insufficient to alter the physical properties of the remaining treatment surface material, said photons being applied to said treatment surface at a relatively oblique angle to the treatment surface's average surface plane.

* C L M S *

This Sheet Has Been Replaced

THIS SHEET HAS BEEN REPLACED

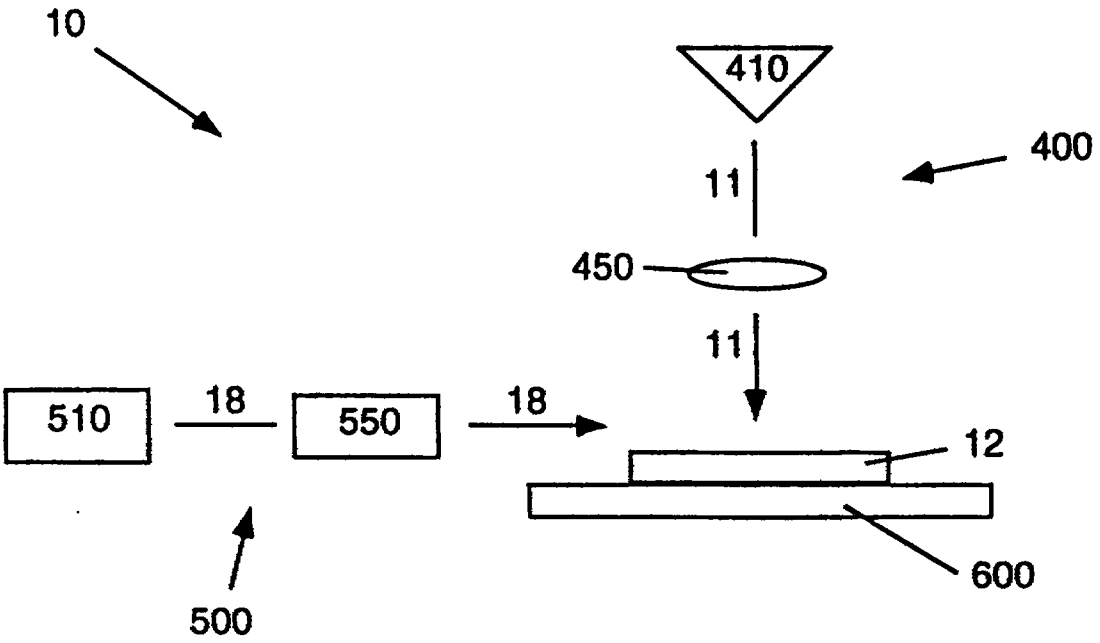
10
410
400
11
450
11
510
18
550
18
12
600
500

FIG. 1

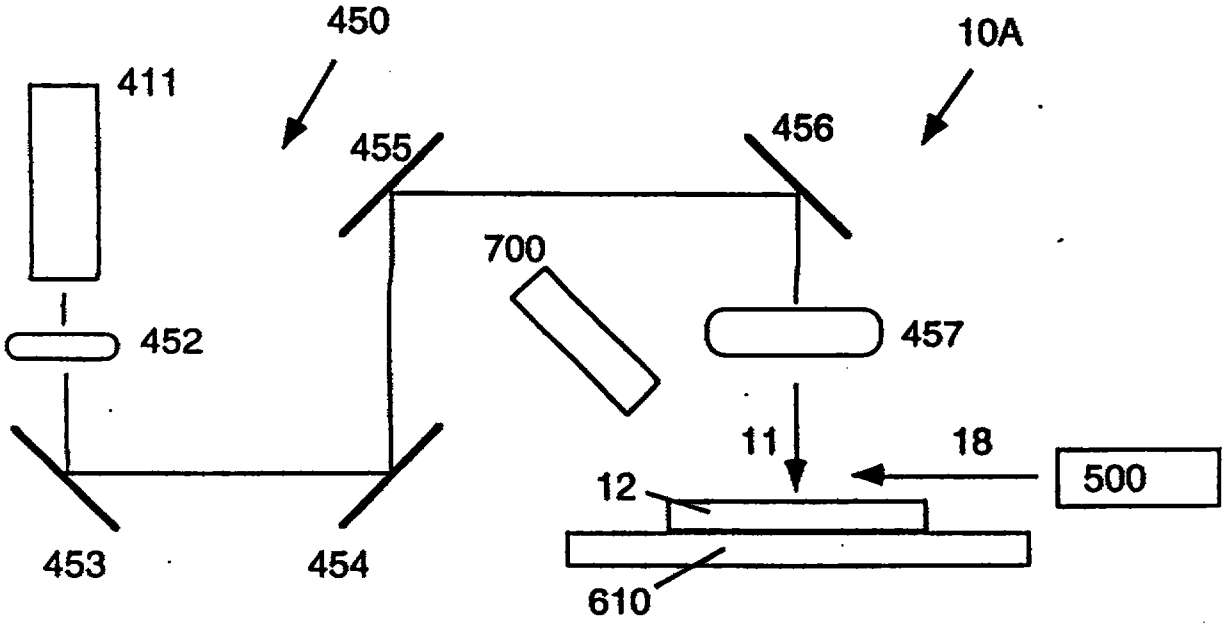
450
10A
411
455
456
700
452
457
11
18
500
12
453
454
610

FIG. 2A

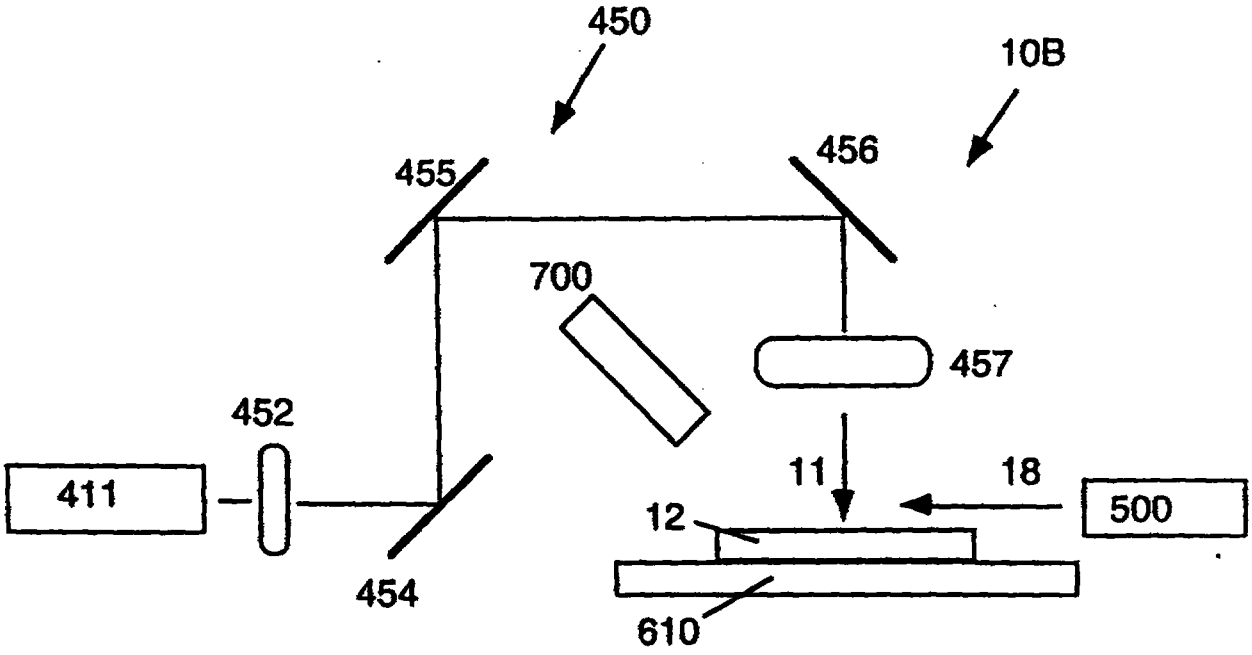
450
10B
455
456
700
457
452
411
11
18
500
12
454
610

FIG. 2B

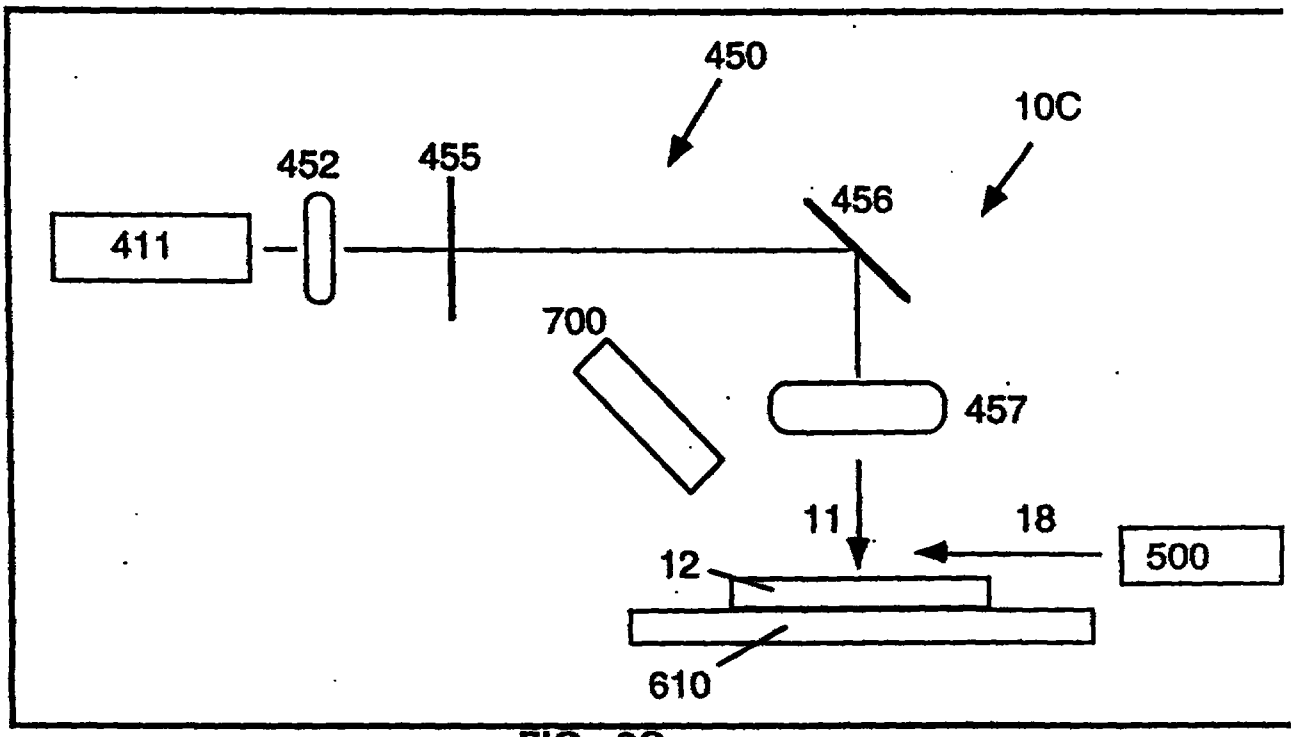
450
10C
452
455
456
411
700
457
11
18
500
12
610

FIG. 2C

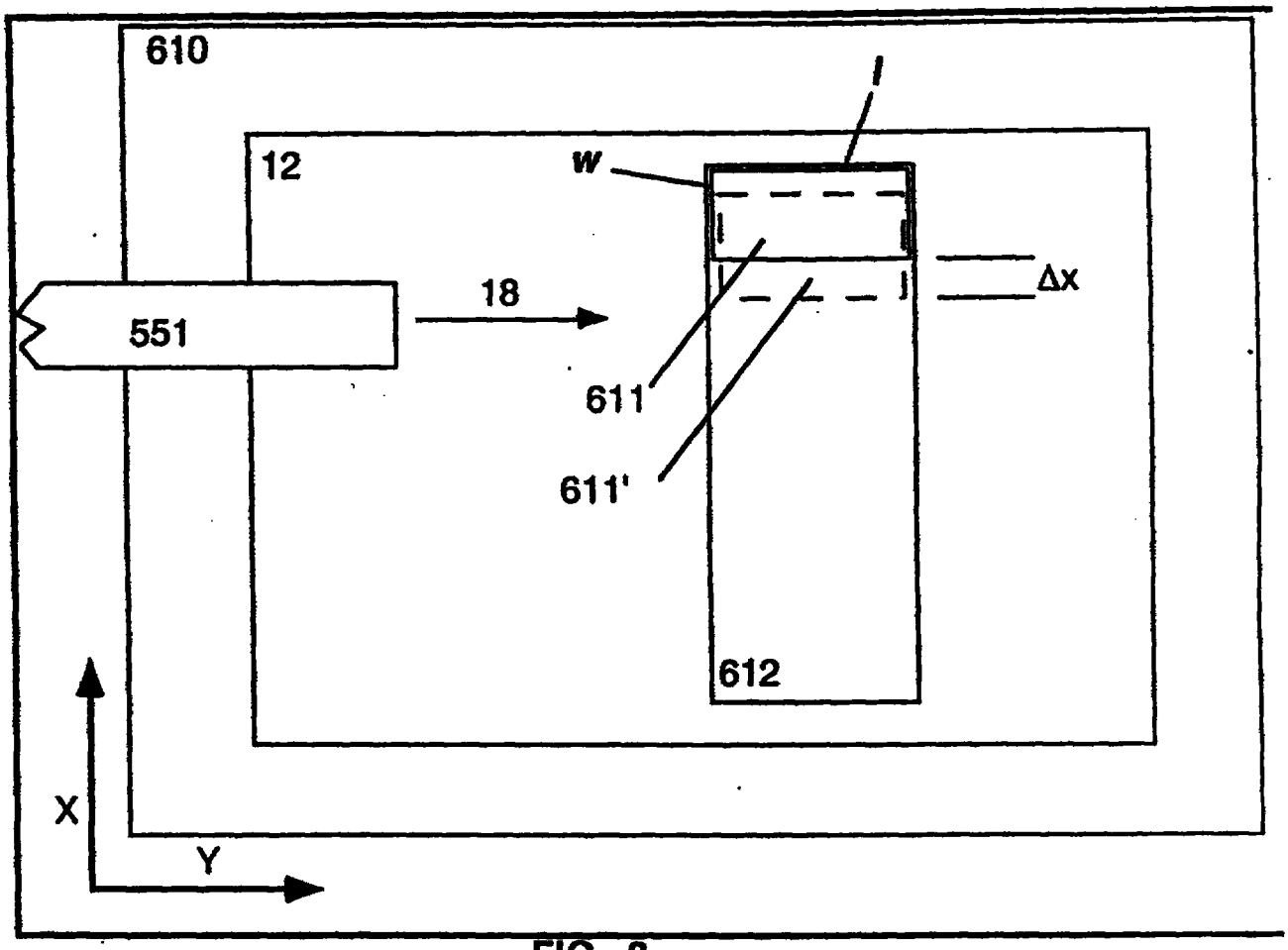

FIG. 3

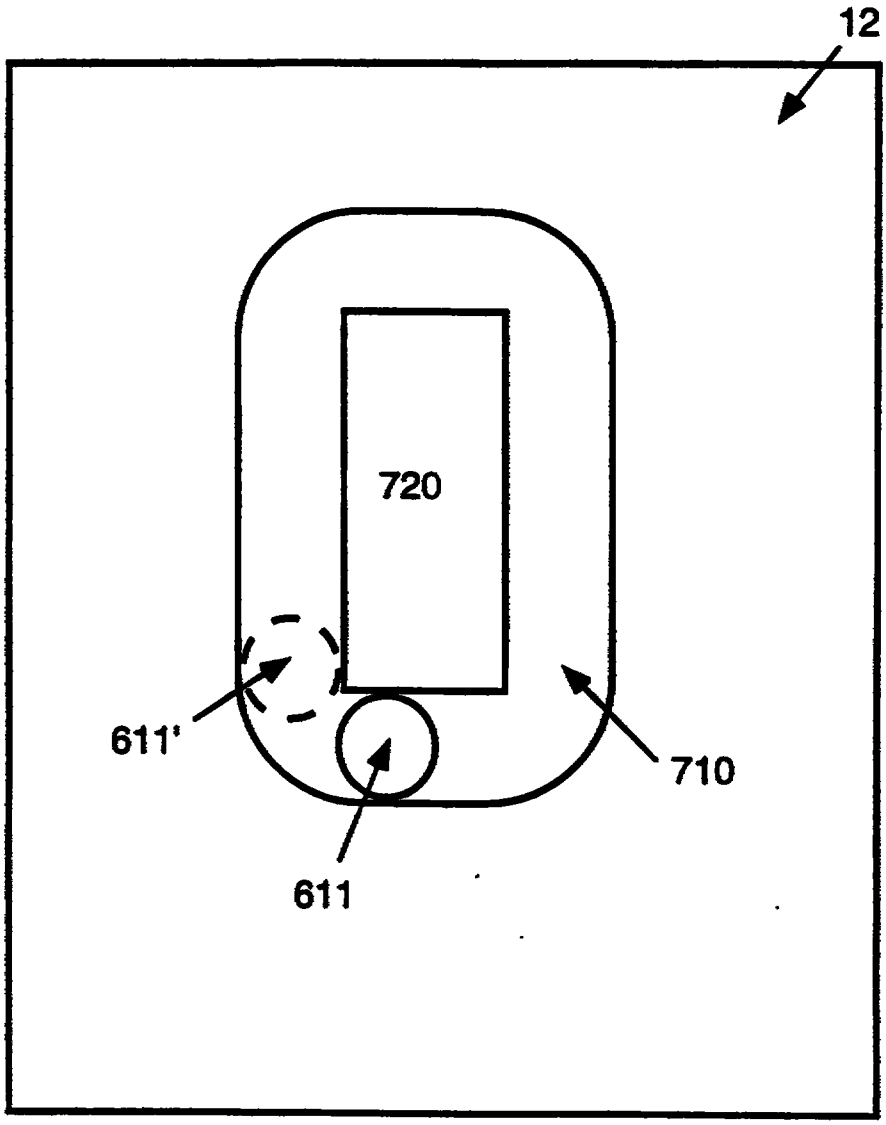

FIG. 4

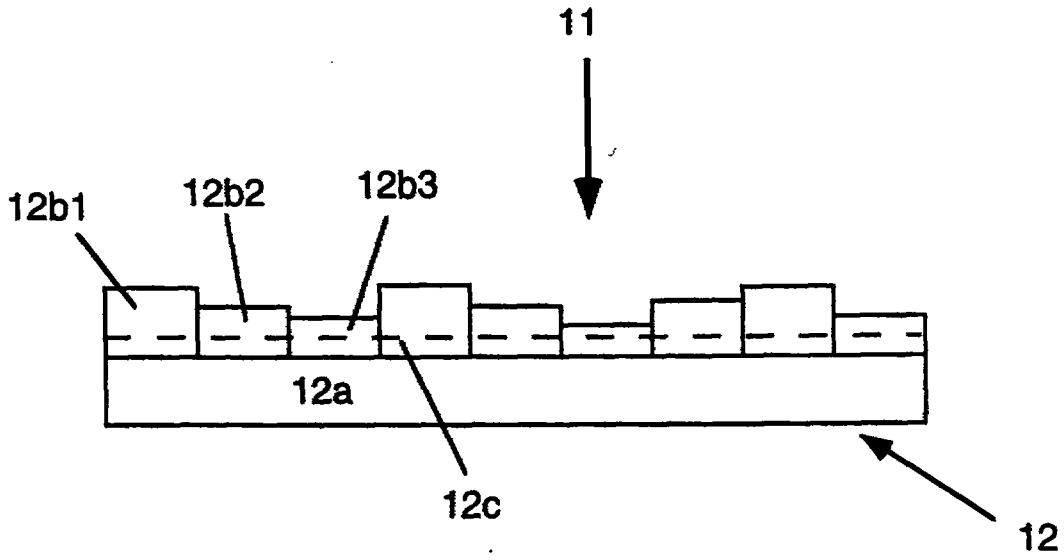
11
12b1
12b2
12b3
12a
12c
12

FIG. 5

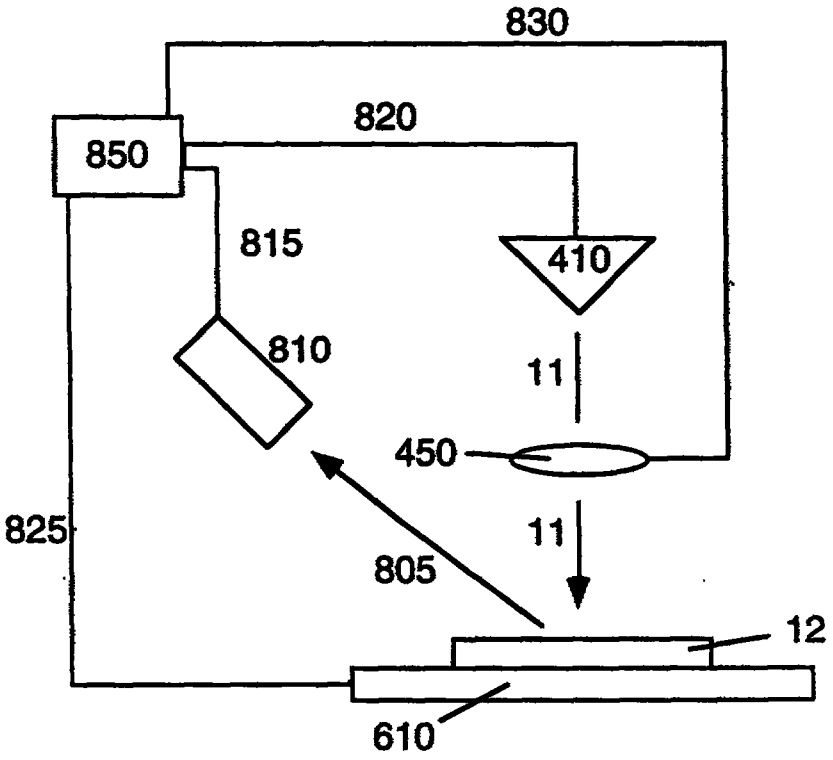
830
820
850
815
410
810
11
450
825
11
805
12
610

FIG. 6

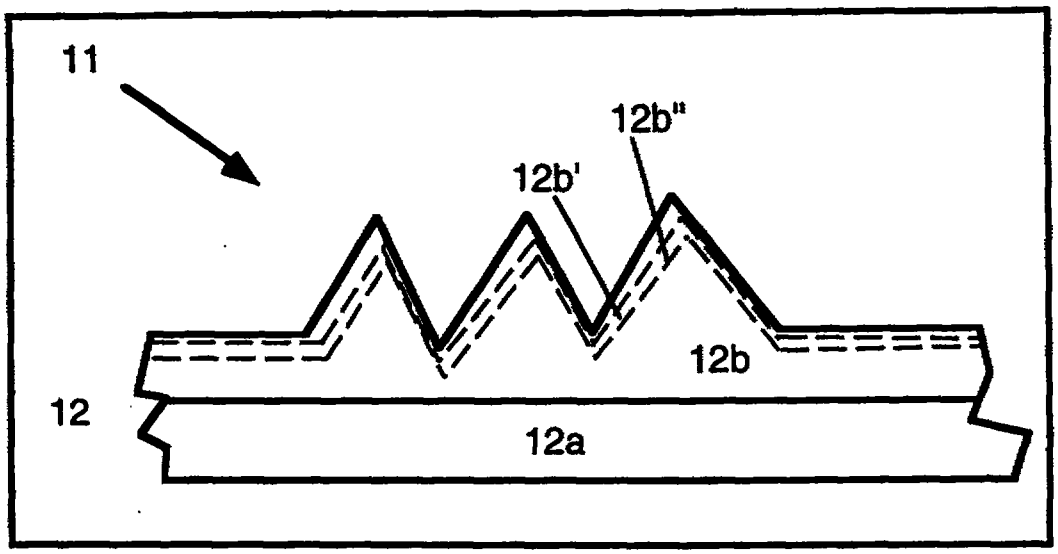

FIG. 7

REPLACEMENT SHEET
24 OCT 1997

SELECTIVE REMOVAL OF MATERIAL BY IRRADIATION

Background Of The Invention

This application relates to U.S. Pat. App. Ser. No. 08/045,165, filed April 12, 1993 (the disclosure of which is incorporated herein by reference and which is referred to herein as the "parent application"), which is a Continuation-in-Part of U.S. Pat. App. Ser. No. 07/865,039 filed March 31, 1992 (the disclosure of which is incorporated herein by reference and which is referred to herein as the "'039 application"), which is a Continuation-in-Part of U.S. Pat. App. Ser. No. 07/611,198, filed November 9, 1990, now U.S. Pat. No. 5,099,557 (the "'557 patent"), which is a Division of U.S. Pat. App. Ser. No. 07/216,903, filed July 8, 1988, now U.S. Pat. No. 5,024,968 (the "'968 patent").

This invention relates to removing material from a surface. More particularly, the invention relates to the selective removal of material from the surface of a substrate by irradiation without altering the physical properties of material to be left on the substrate that is underlying or adjacent to the material to be removed.

Effective removal of undesired material from the surface of a substrate is a critical aspect of many important materials processing and product fabrication processes. As described in the parent application, undesired materials (which may also be considered as contaminants) include particles, unwanted chemical elements or compounds, and films or layers of material. Particles may be

REPLACEMENT SHEET
24 OCT 1997

experienced during the course of production can be significantly reduced by the periodic cleaning of such apparatus.

In general, any process used for removing material from a substrate should do so without affecting the physical properties of the (desired) material that remains. The physical properties that should remain unaffected can in general include crystalline structure, conductivity, density, dielectric constant, charge density, Hall coefficient, and diffusion coefficient for electrons/holes. In particular semiconductor applications (such as metal oxide semiconductor ("MOS"); field effect transistor ("FET"); and bipolar junction ("BJT")), the properties can include capacitance/area in MOS; junction capacitance; channel current in an FET, directed from drain to source; voltage from collector to base, emitter to base in a BJT; voltage from drain to source, gate to source in an FET; MOS threshold potential; MOS surface static charge/area; and storage delay time. Further, it may be undesirable to change the topography (such as the surface roughness) of the remaining material.

As described in detail in the parent application, many techniques have been proposed (and are currently used) for removing undesired materials. These include wet chemical cleaning (RCA process), dilute HF, megasonic and ultrasonic, and supercritical fluid cleaning, UV and ozone cleaning, brush cleaning, vapor HF, laser-assisted liquid cleaning (including the Allen process and Tam process), surface melt, annealing, and ablation.

Another technique is plasma cleaning, which may be used to clean the process chambers of reactive ion etch (RIE) tools after a certain amount of processing (e.g. a certain number of wafers) is completed. The preferred plasma species are oxygen, carbon tetrachloride, and nitrogen, which can be used in various mass molar concentrations for cleaning optics and silicon surfaces. Electron cyclotron resonance (ECR) based plasmas are currently state of the art. The effectiveness of this type of cleaning is limited to particles -- film removal appears to be difficult and damaging to the electrical parametrics.

Dry ice (CO_2) cleaning (also known as snow cleaning and CO_2 jet spray cleaning) is a method of delivering CO_2 snow via a hand-held device having various orifices to clean a surface. This technique is limited by the solubility of the particle in the CO_2 snow, e.g. if the particle is not soluble in CO_2 then it will not be removed from the surface. Further, oxides and polymeric films cannot be removed using this cleaning technique.

REPLACEMENT SHEET
24 OCT 1997

610 and substrate 12 translate with respect to it. This gas delivery system is useful for materials that are not sensitive to typical atmospheric gases, and permits a simpler apparatus than is required when it is required or desired to isolate the substrate from the atmosphere during treatment (such as disclosed in the parent application).

A video camera 700 is positioned to view region 611 and thus provide visual data on the results of treatment.

In the illustrated embodiment, stage 610 is first translated longitudinally in the X direction as radiation beam 11 is applied to the surface of substrate 12, producing an elongated rectangular swath 612 on substrate 12 that has been exposed to radiation beam 11. Stage 610 may be indexed back to a starting position and translated in the X direction again so that radiation beam 11 makes another "pass" over swath 612. After one or more passes, stage 610 may be translated laterally in the Y direction a distance approximately equal to length *l*, then translated again through the X direction to form another swath adjacent to the previous swath 612. Thus, the portion of the surface of substrate 12 to be treated is sequentially exposed to radiation beam 11 and the concurrent flow of gas 18.

The energy flux (energy per unit area) applied to any point on the surface of substrate 12 by radiation beam 11 during a single pulse of laser 411 is equal to the energy of the pulse at the surface divided by the area over which that energy is distributed. This can be expressed as:

$$F_{eps} = \frac{E_{ps}}{l \cdot w}$$

where F_{eps} is the pulse energy flux per unit area at the surface (J/cm^2), E_{ps} is the pulse energy at the surface (J), and *l* and *w* are the length and width of region 611 (cm). Similarly, a pulse power flux (F_{pps}) can be calculated as:

$$F_{pps} = \frac{F_{eps}}{t_p}$$

where t_p is the laser pulse duration.

There are energy losses associated with the passage of radiation beam 11 through the optics and aperture plate. Thus, the laser pulse energy at the surface (E_{ps}) is less than the emitted laser pulse energy. The LEXtra 200 laser includes a mini-controller with a pulse energy meter that is useful for recording

ACEMENT SHEET
24 OCT 1997

duration of 34 ns) power flux per pulse (F_{pps}), and the total energy flux (F_{et}). These process factors were varied by adjusting the pulse energy (E_{ps}), laser pulse repetition rate (R_l), stage velocity (Vs), and incident region width (w).

a. Chromium Sputter Target

In this example, an oxidized chromium sputter target was treated with Apparatus B. The sputter target (as with the other sputter targets used in the experiments described below) was approximately 21 cm long, and slightly oval in shape with a maximum width of 9 cm. A series of nine runs was conducted, the results of which are summarized in Table 3b, below.

Table 3b

Run	Vl	Epm	Eps	Rl	vs	f	w	Feps	Fpps	Npl	Fepa	Npa	Fet	Comments	Rc
2	18	275	143	20	5	23	2.90	0.21	6.3	11.6	2.48	1	2.48	No removal observed	6
3	18	273	142	30	5	23	2.90	0.21	6.2	17.4	3.69	1	3.69	Same as R2, change parameters	6
4	18	279	145	30	5	23	2.05	0.31	9.0	12.3	3.78	1	3.78	No removal observed	6
5	19	348	175	30	5	23	2.05	0.37	10.9	12.3	4.55	1	4.55	No removal observed	6
6	20	390	189	30	5	23	2.05	0.40	11.8	12.3	4.94	1	4.94	Marginal/narrow width	5
7	20	390	189	30	5	23	0.90	0.91	26.9	5.4	4.94	1	4.94	Removed	1
8	19	348	175	30	5	23	0.90	0.84	24.8	5.4	4.55	1	4.55	Removed	1
9	19	351	176	30	10	23	0.90	0.85	25.0	2.7	2.30	1	2.30	Removed, but higher E required	5
10	20	396	192	30	7	23	0.90	0.93	27.3	3.9	3.58	1	3.58	Removed/ fingerprints	1

These data suggest that the power flux per pulse levels applied in the runs spanned a threshold level for multi-photon bonds. Good removal was obtained for values of F_{pps} greater than approximately 12 MW/cm^2, even for constant values of F_{epa} (e.g., from runs 5 to 7) and then for lower values of F_{epa} (e.g., from runs 8 to 10).

b. Erbium Sputter Target

In this example, an oxidized erbium sputter target was treated with apparatus B. The results are summarized in Table 3c, below.

Table 3c

Run	Vl	Epm	Eps	Rl	vs	f	w	Feps	Fpps	Npl	Fepa	Npa	Fet	Comments	Rc
1	18	303	157	20	5	23	2.90	0.24	6.9	11.6	2.73	1	2.73	Bluish oxide remained after 1 pass	1
1a	18	303	157	20	5	23	2.90	0.24	6.9	11.6	2.73	1	2.73	2 passes made, 1 sufficient	1
2	19	354	178	20	10	23	2.90	0.27	7.8	5.8	1.54	1	1.54	1 pass removed oxide	1
3	20	390	192	20	15	23	2.90	0.29	8.5	3.9	1.12	1	1.12	1 pass removed oxide	1
5	20	414	201	20	20	23	2.90	0.30	8.9	2.9	0.87	1	0.87	1pass removed oxide	1
6	20	414	201	20	25	23	2.90	0.30	8.9	2.3	0.70	1	0.70	1 pass removed oxide	1
7	20	423	205	30	50	23	2.90	0.31	9.1	1.7	0.54	1	0.54	Diffraction pattern formed	5

The blue oxide observed is believed to be erbium oxide or some other byproduct of sputtering target interaction. All runs were made with the same beam width of 2.9 mm, while laser pulse energy E_{ps} (and thus, pulse power flux F_{pps}) was slightly increased, and the scan rate significantly increased, from run to run. The first two runs produced partial cleaning, while successive

REPLACEMENT SHEET
24 OCT 1997

Table 4b

Run	Vi	Epm	Eps	Rf	vs	f	w	Feps	Fpps	Npf	Fepa	Npa	Fef	Comments	Rc
Sample 1 = Fingerprint															
7	18	388	224	30	3	23	4.4	0.22	6.5	44.0	9.74	2	19.48	Residual left	2
8	18	285	165	30	2	23	4.4	0.16	4.8	66.0	10.73	2	21.46	Residual left	2
9	20	396	221	30	2	23	4	0.24	7.1	60.0	14.42	2	28.84	Residual left	2
10	22	450	243	30	2	23	4	0.26	7.8	60.0	15.87	1	15.87	Fingerprint removed	1
12	18	273	158	30	1	23	2.2	0.31	9.2	66.0	20.56	1	20.56	Fingerprint removed	1
13	18	273	158	30	3	23	2.2	0.31	9.2	22.0	6.85	2	13.71	Residual left	2
15	18	273	158	30	2	23	2.2	0.31	9.2	33.0	10.28	1	10.28	Fingerprint removed	1
Sample 2 = Paint (red)															
1	18	300	173	30	2	23	2.2	0.34	10.1	33.0	11.30	1	11.30	Red paint removed	1
2	18	300	173	30	2	23	2.2	0.34	10.1	33.0	11.30	1	11.30	Red paint removed	1
3	18	300	173	30	6	23	2.2	0.34	10.1	11.0	3.77	1	3.77	Red paint removed	1
Sample 3 = Marker															
4	18	300	173	30	6	23	2.2	0.34	10.1	11.0	3.77	2	7.53	Two passes required	2
5	18	300	173	30	4	23	2.2	0.34	10.1	16.5	5.65	2	11.30	Two passes required	2
6	18	360	208	30	4	23	2.2	0.41	12.1	16.5	6.78	2	13.55	Two passes required	2
7	22	561	303	30	4	23	3.4	0.39	11.4	25.5	9.89	2	19.78	Two passes required	2
Sample 4 = paint (blue)															
10	18	300	174	30	7	23	0.5	1.51	44.4	2.3	3.49	1	3.49	Blue paint removed	1
12	18	324	187	30	10	23	0.5	1.63	47.8	1.5	2.44	1	2.44	Blue paint removed	1
Sample 5 = fingerprint															
13	18	320	185	30	10	23	0.5	1.61	47.2	1.5	2.41	2	4.82	Residual observed	2
14	18	324	187	30	7	23	0.5	1.63	47.8	2.1	3.49	1	3.49	Fingerprint removed	1

These data indicate that the organic films can be effectively removed without damage to the quartz substrate, at various energy levels in one or more passes.

c. Organic Films on Fused Silica Quartz Window

In this example, various organic films were applied to the surface of a generally planar, fused silica quartz optical window. Two types of organic films were applied: fingerprints (human body oil), with and without additional dust; and blue paint. The window was then treated with Apparatus A. The results of the treatment are summarized in Table 4c, below.

REPLACEMENT SHEET
24 OCT 1997

Table 4c

Run	Vf	Epm	Eps	Rf	vs	l	w	Feps	Fpps	Npl	Fepa	Npa	Fat	Comments	Rc
Sample 1 = Fingerprint / dust															
1	18	336	194	30	4	23	3.5	0.24	7.1	26.3	6.33	1	6.33	Dust removed, residual FP	1
2	19	435	247	30	4	23	3.5	0.31	9.0	26.3	8.05	1	8.05	Better removal observed	5
3	19	400	228	30	4	23	1.8	0.55	16.2	13.5	7.44	1	7.44		6
1	22	546	295	30	5	23	1.8	0.71	21.0	10.8	7.70	2	15.40	Some residual	2
2	22	549	297	30	5	23	1	1.29	38.0	6.0	7.74	2	15.49	Some residual	2
4	22	546	295	30	5	23	0.5	2.57	75.5	3.0	7.70	1	7.70	FP and dust removed	1
5	22	529	286	30	10	23	0.5	2.49	73.1	1.5	3.73	2	7.46	Some residual	2
6	22	549	297	30	7	23	0.5	2.58	75.9	2.1	5.53	2	11.06	Some residual, 90% removed	2
7	22	549	297	30	7	23	0.5	2.58	75.9	2.3	5.96	1	5.96	FP and dust removed	1
8	18	348	201	30	7	23	0.5	1.74	51.3	2.3	4.02	2	8.05	Residual FP	2
8a	19	420	239	30	7	23	0.5	2.08	61.2	2.3	4.80	2	9.60	FP residual	2
9	20	480	268	30	7	23	0.5	2.33	68.5	2.3	5.38	2	10.76	Some FP residual	2
Sample 2 = Paint (blue)															
10	18	300	174	30	7	23	0.5	1.51	44.4	2.3	3.49	1	3.49	Blue paint removed	1
12	18	324	187	30	10	23	0.5	1.63	47.8	1.5	2.44	1	2.44	Blue paint removed	1
Sample 3 = Fingerprint															
13	18	320	185	30	10	23	0.5	1.61	47.2	1.5	2.41	2	4.82	Some residual	2
14	18	324	187	30	7	23	0.5	1.63	47.8	2.1	3.49	1	3.49	Fingerprint removed	1

These data again show that the organic films can be effectively removed without damage to the quartz substrate, at various energy levels in one or more passes.

5. Removal of Polycrystalline Silicon from Quartz

The application of the treatment method and apparatus described above with regard to polycrystalline silicon on quartz is illustrated in the following examples. The interior surface of a cylindrical quartz furnace tube was treated to remove a layer of polycrystalline silicon that recondensed on the surface during treatment of silicon dies passed through the furnace tube. A partial radial section of the tube was treated with Apparatus A. A series of test runs was conducted, the results of which are shown in Table 5a, below. In the test apparatus, incident region 611 was continuously scanned across a swath 612 with a width (X dimension) of between 0.9 and 2.0 mm for scan times as long as tens of minutes. The number of passes (N_{pa}) shown in Table 5a is therefore:

$$N_{pa} = \frac{t_{scan} \cdot V_s}{w_{swath}}$$

where w_{swath} is the width of the swath 612, t_{scan} is the time duration of the scan, and V_s is the laser scan velocity.

It was observed that at high energy and power flux levels, the point at which the polycrystalline silicon layer was completely removed, and the quartz thus exposed to the radiation, was accompanied by fluorescence of the quartz.

REPLACEMENT SHEET
24 OCT 1997

substrate surface. The thickness of material removed from the substrate is a function of the bond energies of the material to be removed, the energy (wavelength) of the applied photons, the energy flux of the applied photons and, for multi-photon bonds, the power flux. Energy and power fluxes can be also be referred to as a spatial and temporal concentration of the applied photons. For a given material, it is therefore possible to determine the temporal and spatial photon concentration required to remove a layer of the material of a desired thickness. As described above for oxidation and organic and inorganic film layers, the layers of material can be removed uniformly over an extensive area of substrate by scanning the radiation across the substrate surface. However, by suitably controlling the removal process, it is possible to selectively (e.g., non-uniformly) remove material from relatively small areas to modify the topography of the substrate surface. The topography modification may be in the nature of micromachining to create nanostructures or may be to planarize a rough surface.

a. Creation of Nanostructures

Nanostructures can be built up by selectively removing substrate material from around structures that are to be elevated above the surrounding surface. This can be done in two ways. The first is conceptually equivalent to a milling operation on conventional structure scales. To continue this analogy, the incident radiation region 611 can be considered to be the milling tool, with the size of region 611 (corresponding to the size of the milling tool) dictating the smallest width of material that can be removed. Similarly, the lateral resolution of the control over the movement of region 611 (whether by traversing a stage such as 610 or moving focusing optics) dictates the scale and accuracy with which structures can be created. The depth of the "cut" achieved on each "pass" of the incident region is dictated by the energy and power fluxes, and the total depth of material removed is further controlled by the number of passes made over the surface.

The creation of a simple nanostructure is illustrated schematically in Fig. 4. The nanostructure is an "island" 720 surrounded by a "trench" 710 formed in the surface of substrate 12. Trench 710 is formed by traversing incident radiation region 611 (shown schematically as a circular region, although it may be rectangular as illustrated in the experimental apparatus above) around the perimeter of the region in which island 720 is desired to be created. The

REPLACEMENT SHEET
24 OCT 1997

traversal of region 611 is indicated by another position of the region (611') in another portion of the trench 710.

An alternative micromachining technique is to use a mask to define the areas of material to be removed, overlay the mask on or above the substrate treatment surface, and scan the incident radiation region uniformly across the mask. Of course, the mask and substrate materials must be selected, and the photon power and energy flux levels set, to remove the undesired material from the substrate treatment surface without damaging the mask so much as to render it unusable before the substrate micromachining is completed.

Techniques for the use of masks (such as for photolithography) and the control over laser incident region size and position have been demonstrated in the prior art to be controllable on the spatial scale of interest in the micromachining of nanostructures. The way in which those techniques would be applied to use the present invention for micromachining will therefore be evident to the artisan and are not described in more detail here.

b. Planarization

A substrate surface may also be "planarized" by selective application of radiation, as illustrated schematically in Fig. 5. If, as shown in Fig. 5 the substrate 12 has a layer 12b (such as an oxide layer, although the layer may simply be a surface layer of the substrate) that is non-uniform in thickness (indicated by regions 12b1, 12b2, 12b3, etc.), it may be desirable in certain applications to remove some, but not all, of the oxide layer, and to make the oxide layer a more uniform thickness (indicated by dashed line 12c). This can be accomplished by selective application of the radiation to each of the regions 12b1, etc. to remove a thickness of material equal to the difference between the pre-treatment thickness and the desired thickness. The radiation can be scanned in raster fashion across the surface of the substrate, and the desired amount of material removed from each region.

To accurately determine the pre-treatment thickness of layer 12b (and, optionally, to confirm the desired post-treatment thickness), it is desirable to use an in-situ film thickness measurement technique. Suitable known techniques include reflection or beam profile spectrophotometry or ellipsometry. (Such techniques are described in P. Burggraaf, "Thin Film Metrology: Headed for a New Plateau" Semiconductor International March 1994). An actual thickness in each region can then be compared to the desired thickness to determine a thickness of undesired material. The appropriate radiation energy and power

THIS SHEET HAS BEEN REPLACED

REPLACEMENT SHEET
24 OCT 1997

9. The method of claims 1, 2, 3, or 6, wherein said material to remain on, and said material to be removed from, the treatment surface have substantially the same chemical composition.

10. The method of claims 1, 2, 3, or 6, wherein said material to remain on the treatment surface is quartz and said material to be removed is polycrystalline silicon.

11. A method for reducing the roughness of a treatment surface having an average surface plane and having individual surface elements disposed at angles to the average surface plane, without affecting the physical properties of the treatment surface, comprising the steps of:

introducing across said treatment surface a flow of gas substantially inert to said treatment surface; and

irradiating said treatment surface with energetic photons at energy and power flux levels sufficient to break the constituent bonds of the treatment surface material and thereby liberate the material from the treatment surface, and insufficient to alter the physical properties of the remaining treatment surface material, said photons being applied to said treatment surface at a relatively oblique angle to the treatment surface's average surface plane.

12. An apparatus adapted for carrying out the method of Claim 3.

REPLACEMENT SHEETS SG
☐ Description : paged ..... to paged .....
☑ Claim(s) : paged 31 to paged 36
☐ Drawing(s) : paged ..... to paged .....
☐ Abstract : paged ..... to paged .....
DATE OF RECEIPT 17 MAR 1998

CLAIMS

1. A method for selectively removing a substantially continuous layer of undesired material of a treatment surface without altering the physical properties of desired material of the treatment surface adjacent to or underlying the undesired material, comprising the steps of:

introducing across said undesired material a flow of gas substantially inert to said substrate; and

irradiating said undesired material with energetic photons in a spatial and temporal concentration sufficient to release the undesired material from the treatment surface and insufficient to raise the temperature of the undesired material above the temperature at which the undesired material melts or thermally decomposes or to alter the physical properties of the desired material.

2. A method of selectively removing a substantially continuous layer of a material of a treatment surface without altering the physical properties of the material to be left on the treatment surface adjacent to or underlying the removed layer, comprising the steps of:

introducing across said treatment surface a flow of gas substantially inert to said material; and

irradiating said treatment surface with energetic photons at energy and power flux levels sufficient to break the constituent bonds of the material to be removed and insufficient to raise the temperature of the remaining material adjacent to or underlying the removed layer to a level which would produce changes in the physical properties of the remaining material adjacent to or underlying the removed layer.



3. A method of creating structures in a treatment surface of a substrate by selectively removing undesired material from the treatment surface without affecting the physical properties of desired material to be left on the treatment surface adjacent to or underlying the undesired material, comprising the steps of:

introducing across said undesired material a flow of gas substantially inert to said substrate;

selectively irradiating said undesired material with energetic photons at power and energy flux levels sufficient to remove undesired material from the treatment surface and insufficient to alter the physical properties of the desired material; and

removing from the treatment surface a thickness of undesired material in a spatial pattern required to form a desired structure in the treatment surface.

4. The method of claim 3 further comprising the steps of:

producing on said undesired material an incident region of irradiation having dimensions appropriate to the formation of the desired structure; and

indexing said incident radiation region across said spatial pattern.

5. The method of claim 3 further comprising the steps of:

disposing between the treatment surface and a source of said energetic photons a mask corresponding to said spatial pattern; and

substantially uniformly irradiating said spatial pattern on the treatment surface through said mask.

6. A method of planarizing a treatment surface having a plurality of contiguous regions having differing thicknesses of material by selectively removing differing thicknesses of material from each region, without altering the physical properties of

* C L M S *

the remaining material, comprising the steps of:

determining for each region an existing thickness of material in the region;

comparing each existing material thickness to a desired material thickness and determining therefrom a thickness of undesired material;

introducing across said region a flow of gas substantially inert to said material; and

for each region determined to have an undesired thickness of material, selectively irradiating said region with energetic photons having a spatial and temporal concentration sufficient to break the constituent bonds to provide for removal of said thickness of material from the region and insufficient to raise the temperature of the material to a level that would alter the physical properties of the remaining material.

7. The method of claim 1, 2, 3, or 6, wherein said material to be removed is an oxide of a metal.

8. The method of claim 1, 2, 3, or 6, wherein said said material to be removed is an organic material that is supported by an inorganic substrate.

9. The method of claim 1, 2, 3, or 6, wherein said material to remain on, and said material to be removed from, the treatment surface have substantially the same chemical composition.

10. The method of claim 1, 2, 3, or 6 wherein said material to remain on the treatment surface is quartz and said material to be removed is polycrystalline silicon.

* C L M S *

11. A method of reducing the roughness of a treatment surface having an average surface plane and having individual surface elements disposed at one or more angles to the average surface plane, without altering the physical properties of the remaining material of the treatment surface, comprising the steps of:

introducing across said treatment surface a flow of gas substantially inert to said treatment surface; and

irradiating said surface elements of said treatment surface with energetic photons at energy and power flux levels sufficient to break the constituent bonds of the treatment surface material and thereby liberate the material from a remainder of the material of the treatment surface, and insufficient to alter the physical properties of the remaining treatment surface material, said photons being applied to said treatment surface at a relatively oblique angle to the treatment surface's average surface plane.

12. The method of claim 11, wherein said surface elements are protrusions that have exposed, oblique side surfaces with respect to the average surface plane and said photons applied at the relatively oblique angle are directed at a set of the exposed, oblique side surfaces leaving a shadow side of said exposed, oblique side surfaces unaffected.

13. The method of claim 1, 2, 3, 6, or 11, wherein the removed material is the same as the remaining material.

14. The method of claim 1, 2, 3, 6, or 11 wherein irradiating the material to be removed with energetic photons is sufficient to break the constituent bonds between the material to be removed and the material to remain both insufficient to alter the physical properties of a surface monolayer of the remaining material and insufficient to raise the

* C L M S *

temperature of the undesired material being removed above the temperature at which the undesired material melts or thermally decomposes.

15. A method for selectively removing a substantially continuous layer of undesired material from a treatment surface without affecting the physical properties of desired material to be left on the treatment surface adjacent to or underlying the undesired material comprising the steps of:

differentiating on the treatment surface an undesired material having a first temperature above which a physical property changes substantially and a desired material having a second temperature above which said physical property changes substantially, said first and second temperatures being the same or essentially the same;

introducing across said undesired material a flow of gas substantially inert to both said undesired material and said desired material; and

irradiating said undesired material with energetic photons at energy and power flux levels sufficient to break the constituent bonds of the undesired material and insufficient to raise the temperature of a surface monolayer of the desired material underlying the undesired material to said second temperature.

16. The method of claim 15 wherein said energetic photons have photon energy less than the energy of the constituent bonds of the material to be removed and said power flux level is sufficiently high to produce an effective rate of substantially simultaneous incidence of multiple photons at bond sites to break said bonds.

17. The method of claim 15 or 16 wherein the undesired material of the treatment surface is chemically the same as that of the differentiated desired material.

* C L M S *

18. A device for selectively removing a contiguous area of undesired material from a treatment surface of a substrate without altering the physical properties of desired material to be left on the treatment surface adjacent to or underlying the undesired material, comprising:

means for introducing across said undesired material a flow of gas substantially inert to said substrate;

means for irradiating said undesired material with energetic photons in a spatial and temporal concentration sufficient to release the undesired material from the treatment surface and insufficient to alter the physical properties of the desired material; and

an in-situ film thickness measurement apparatus for determining the thickness of undesired material to be removed from the susbstrate.

19. The device of in claim 18 wherein said film thickness measuring apparatus includes an ellipsometer.

20. The device of claim 18 or 19 further comprising a control system for varying the amount of energy applied to certain regions of a substrate having a different thickness to achieve a more uniform thickness in a remaining portion of the substrate following removal of the undesired material.

21. The device of claim 18, 19, or 20 further comprising a control system for adjusting the position of the substrate to cut a nano-structure out from the treatment surface.

22. The device of claim 18, 19, 20, or 21 wherein said means for introducing includes a nozzle which directs a gas flow parallel to the treatment surface and has a fixed outlet adjacent an edge of the treatment surface and said device further comprising a means for shifting the substrate with respect to said fixed nozzle.

* C L M S *

SG FT01129-0

RTMP copy

PCT WORLD INTELLECTUAL PROPERTY ORGANIZATION
International Bureau

INTERNATIONAL APPLICATION PUBLISHED UNDER THE PATENT COOPERATION TREATY (PCT)

(51) International Patent Classification 6 : B08B 7/00, B23K 26/00 — A1

(11) International Publication Number: **WO 96/09128**

(43) International Publication Date: 28 March 1996 (28.03.96)

(21) International Application Number: PCT/US95/11993

(22) International Filing Date: 15 September 1995 (15.09.95)

(30) Priority Data:
08/306,431 19 September 1994 (19.09.94) US

(60) Parent Application or Grant
(63) Related by Continuation
US 08/306,431 (CON)
Filed on 19 September 1994 (19.09.94)

(71) Applicant *(for all designated States except US)*: CAULDRON LIMITED PARTNERSHIP [US/US]; Suite 512, 4405 East-West Highway, Bethesda, MD 20814 (US).

(72) Inventors; and
(75) Inventors/Applicants *(for US only)*: ENGELSBERG, Audrey, C. [US/US]; 23 Elmer Place, Milton, VT 05468 (US). FITZPATRICK, Donna, R. [US/US]; 4393 Embassy Park Drive, N.W., Washington, DC 20016 (US).

(74) Agents: DEGRANDI, Joseph, A. et al.; Beveridge, DeGrandi, Weilacher & Young, Suite 800, 1850 M Street, N.W., Washington, DC 20036 (US).

(81) Designated States: AM, AT, AU, BB, BG, BR, BY, CA, CH, CN, CZ, DE, DK, EE, ES, FI, GB, GE, HU, IS, JP, KE, KG, KP, KR, KZ, LK, LR, LT, LU, LV, MD, MG, MK, MN, MW, MX, NO, NZ, PL, PT, RO, RU, SD, SE, SG, SI, SK, TJ, TM, TT, UA, UG, US, UZ, VN, European patent (AT, BE, CH, DE, DK, ES, FR, GB, GR, IE, IT, LU, MC, NL, PT, SE), OAPI patent (BF, BJ, CF, CG, CI, CM, GA, GN, ML, MR, NE, SN, TD, TG), ARIPO patent (KE, MW, SD, SZ, UG).

Published
With international search report.
Before the expiration of the time limit for amending the claims and to be republished in the event of the receipt of amendments.

PCT A1 + SR
Republication 24.10.97
-11- 17-3-98

(54) Title: SELECTIVE REMOVAL OF MATERIAL BY IRRADIATION

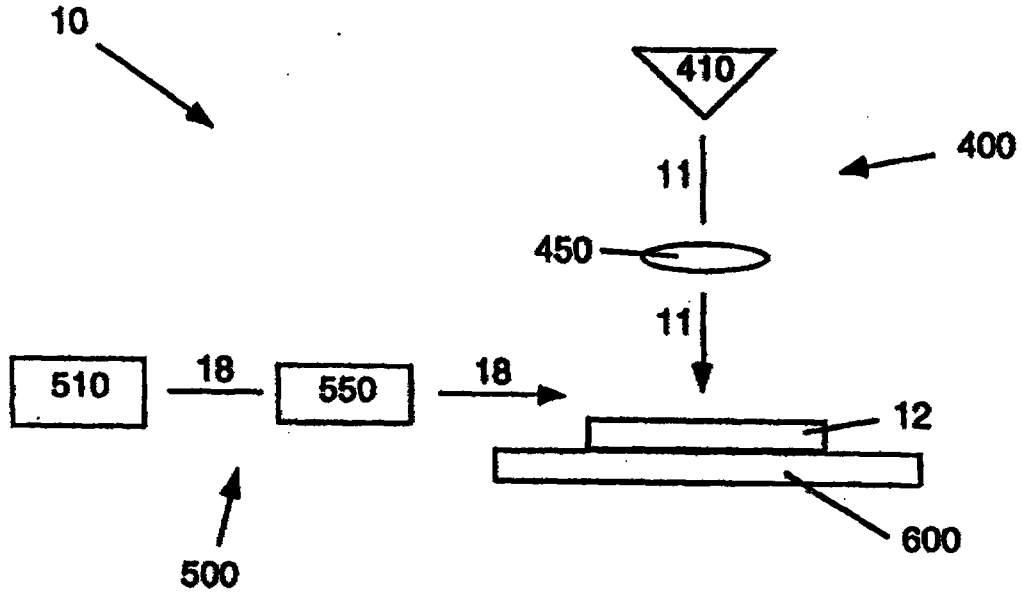

(57) Abstract

An apparatus and method for selectively removing undesired material from the surface of a substrate provides a flow of inert gas over the undesired material susbtrate surface while irradiating the undesired material with energetic photons. The invention enables removal of undesired material without altering the physical properties of the material underlying or adjacent the removed, undesired material. The invention can be applied to produce changes in surface topography (including nano-structuring and surface planarization).

FOR THE PURPOSES OF INFORMATION ONLY

Codes used to identify States party to the PCT on the front pages of pamphlets publishing international applications under the PCT.

AT	Austria	GB	United Kingdom	MR	Mauritania
AU	Australia	GE	Georgia	MW	Malawi
BB	Barbados	GN	Guinea	NE	Niger
BE	Belgium	GR	Greece	NL	Netherlands
BF	Burkina Faso	HU	Hungary	NO	Norway
BG	Bulgaria	IE	Ireland	NZ	New Zealand
BJ	Benin	IT	Italy	PL	Poland
BR	Brazil	JP	Japan	PT	Portugal
BY	Belarus	KE	Kenya	RO	Romania
CA	Canada	KG	Kyrgystan	RU	Russian Federation
CF	Central African Republic	KP	Democratic People's Republic of Korea	SD	Sudan
CG	Congo			SE	Sweden
CH	Switzerland	KR	Republic of Korea	SI	Slovenia
CI	Côte d'Ivoire	KZ	Kazakhstan	SK	Slovakia
CM	Cameroon	LI	Liechtenstein	SN	Senegal
CN	China	LK	Sri Lanka	TD	Chad
CS	Czechoslovakia	LU	Luxembourg	TG	Togo
CZ	Czech Republic	LV	Latvia	TJ	Tajikistan
DE	Germany	MC	Monaco	TT	Trinidad and Tobago
DK	Denmark	MD	Republic of Moldova	UA	Ukraine
ES	Spain	MG	Madagascar	US	United States of America
FI	Finland	ML	Mali	UZ	Uzbekistan
FR	France	MN	Mongolia	VN	Viet Nam
GA	Gabon				

9701129-0