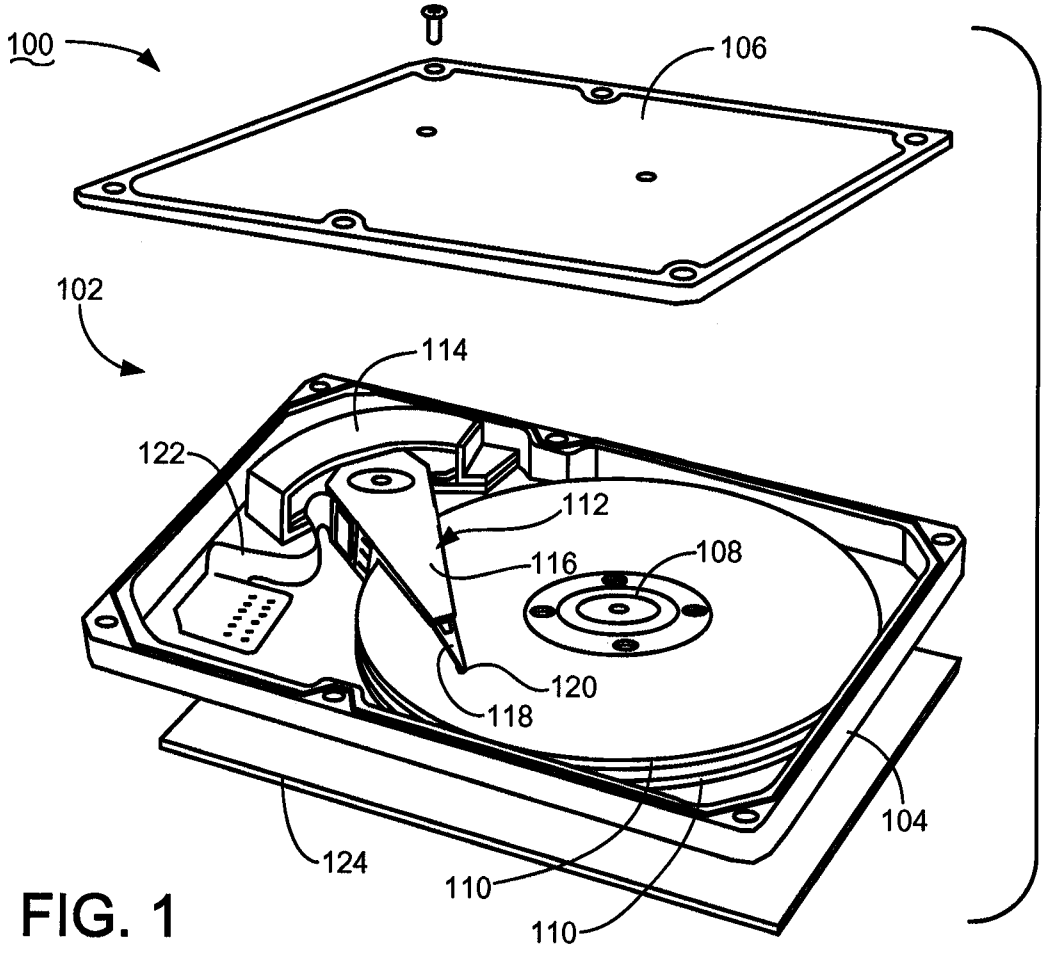
100
106
102
114
122
112
116
108
120
118
104
124
110
110

FIG. 1

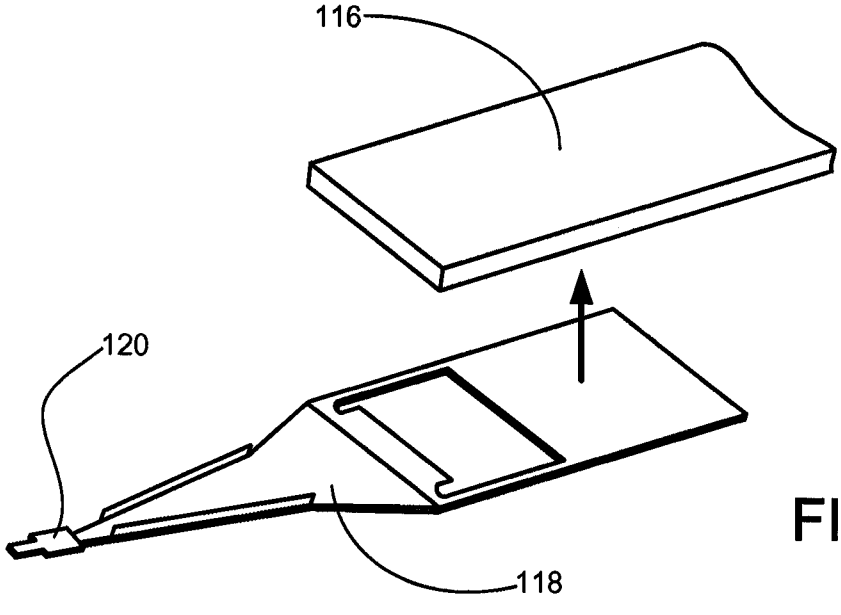
116
120
118

FIG. 2

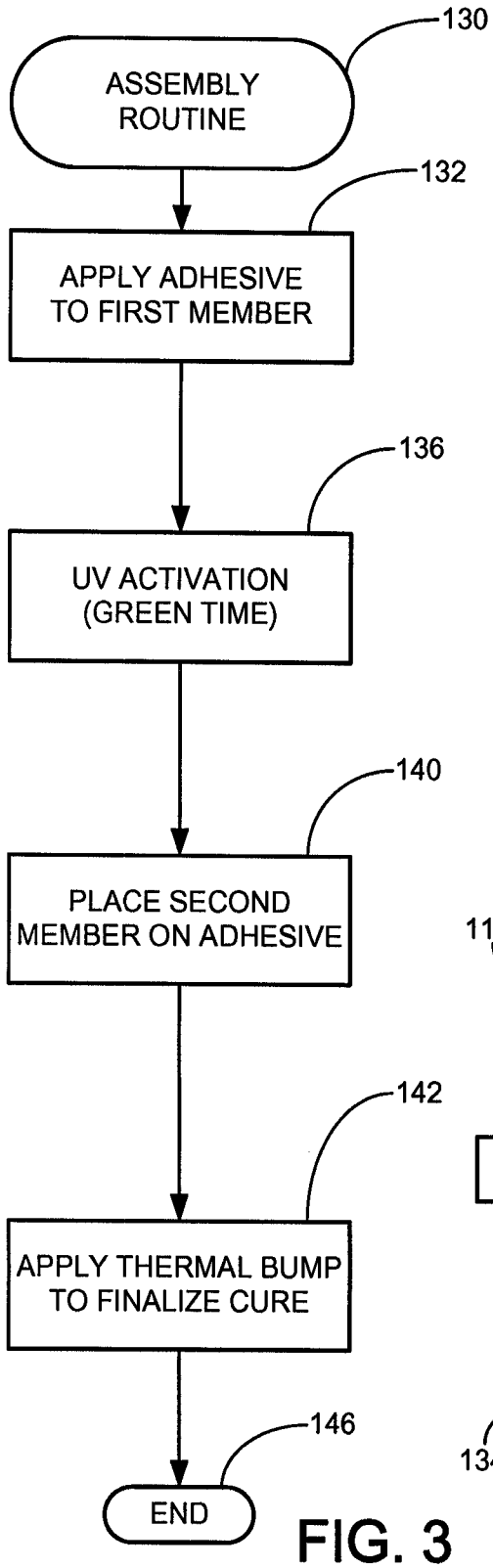
ASSEMBLY ROUTINE
130
APPLY ADHESIVE TO FIRST MEMBER
132
UV ACTIVATION (GREEN TIME)
136
PLACE SECOND MEMBER ON ADHESIVE
140
APPLY THERMAL BUMP TO FINALIZE CURE
142
END
146

FIG. 3

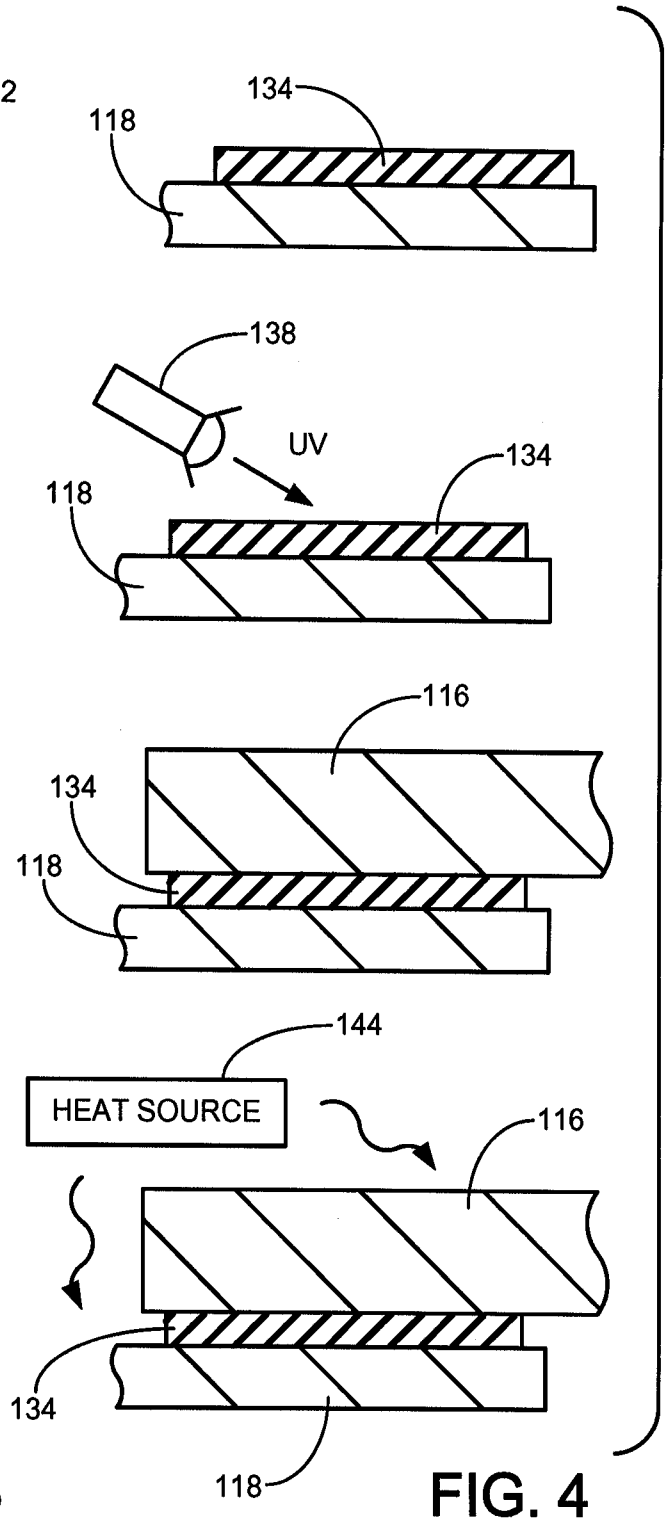
134
118
138
UV
134
118
116
134
118
144
HEAT SOURCE
116
134
118

FIG. 4

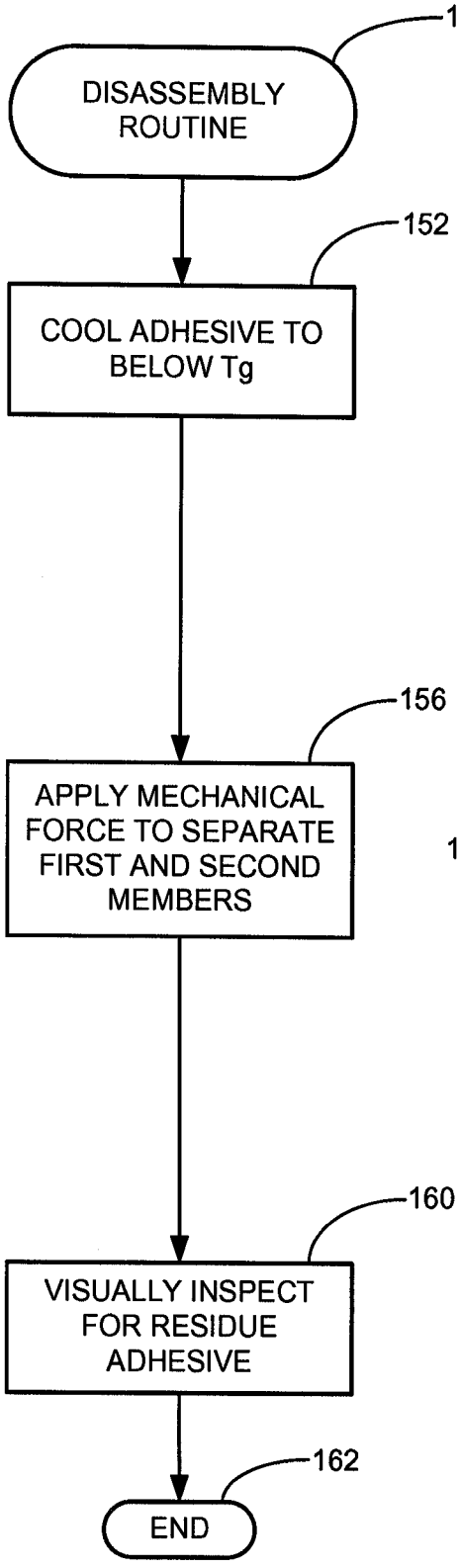
150
DISASSEMBLY ROUTINE
152
COOL ADHESIVE TO BELOW Tg
156
APPLY MECHANICAL FORCE TO SEPARATE FIRST AND SECOND MEMBERS
160
VISUALLY INSPECT FOR RESIDUE ADHESIVE
162
END

FIG. 5

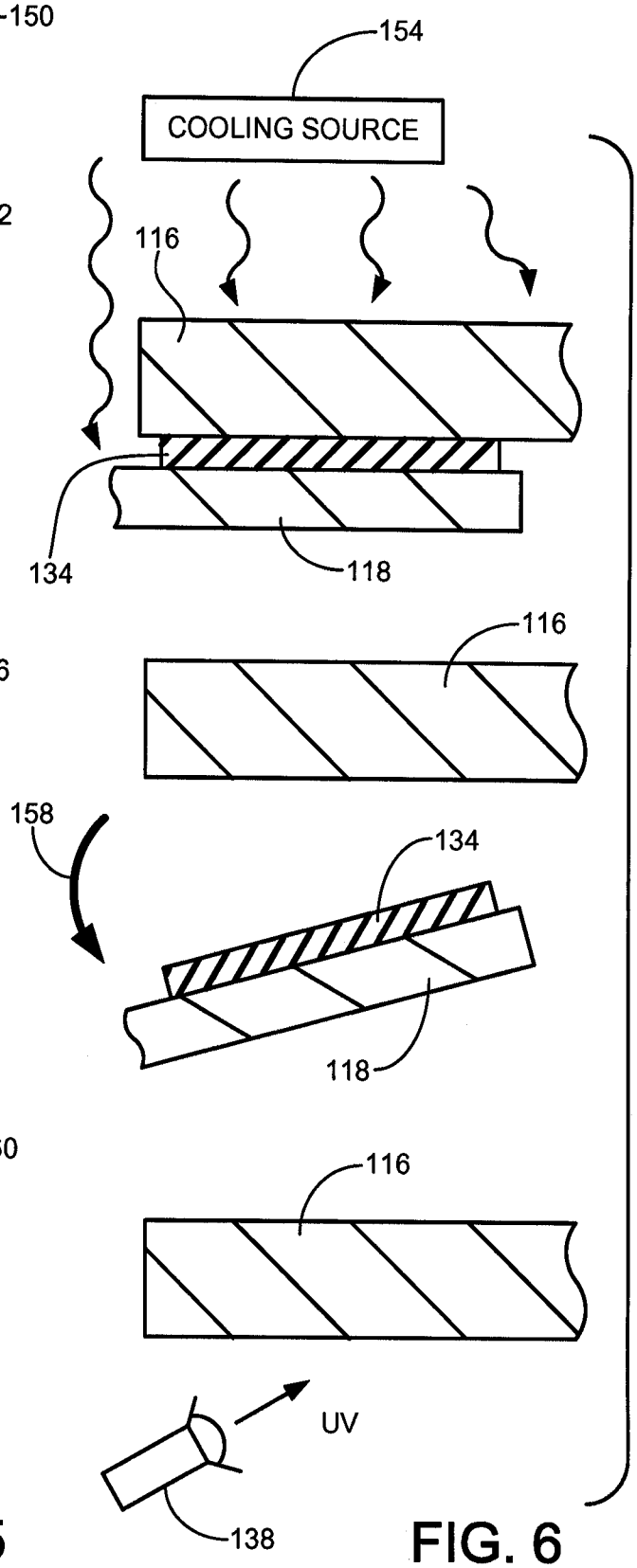
154
COOLING SOURCE
116
134
118
116
158
134
118
116
UV
138

FIG. 6

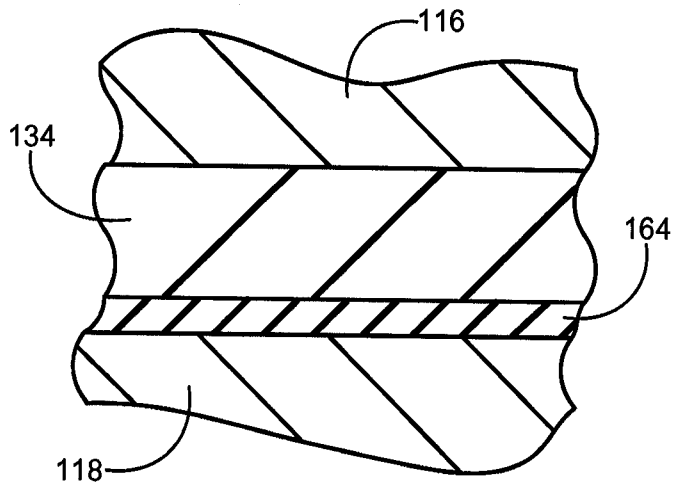

FIG. 7

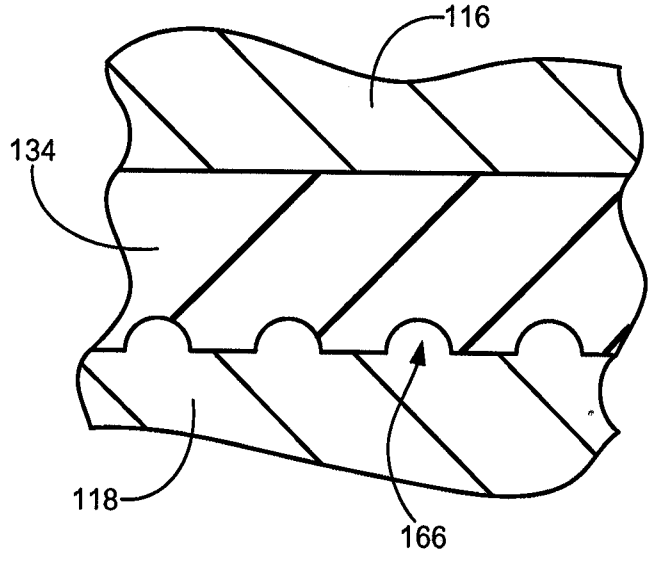

FIG. 8

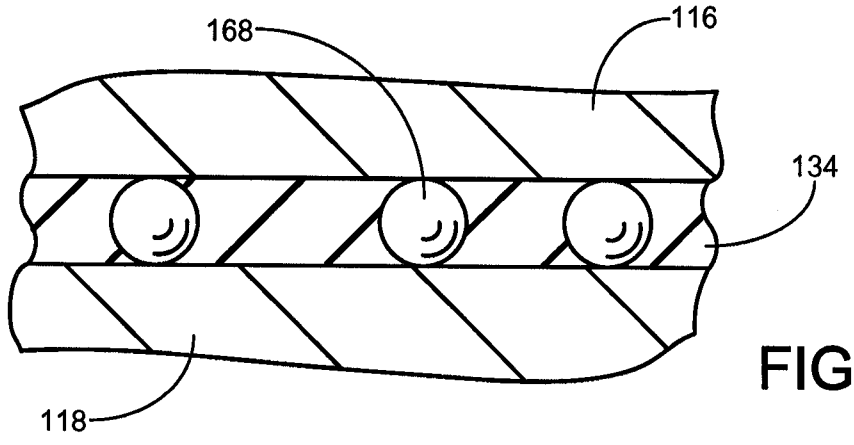

FIG. 9