4706005-7.

PCT WORLD INTELLECTUAL PROPERTY ORGANIZATION
International Bureau

INTERNATIONAL APPLICATION PUBLISHED UNDER THE PATENT COOPERATION TREATY (PCT)

(51) International Patent Classification 6 : B08B 9/02, 9/04 — A1

(11) International Publication Number: **WO 96/36445**

(43) International Publication Date: 21 November 1996 (21.11.96)

(21) International Application Number: PCT/EP96/01635

(22) International Filing Date: 17 April 1996 (17.04.96)

(30) Priority Data:
1000399 19 May 1995 (19.05.95) NL

(71) Applicant *(for all designated States except US)*: PIGUILLET & ZONEN V.O.F. [NL/NL]; Industrieweg 82, NL-2651 BD Berkel en Rodenrijs (NL).

(72) Inventor; and
(75) Inventor/Applicant *(for US only)*: PIGUILLET, Edouard, Jean, François [NL/NL]; Herenstraat 14a, NL-2651 BD Berkel en Rodenrijs (NL).

(74) Agent: HOUTINK, Reinoud; Arnold & Siedsma, Sweelinckplein 1, NL-2517 GK The Hague (NL).

(81) Designated States: AL, AM, AU, BB, BG, BR, CA, CN, CZ, EE, FI, GE, HU, IS, JP, KG, KP, KR, LK, LR, LT, LV, MD, MG, MK, MN, MX, NO, NZ, PL, RO, SG, SI, SK, TR, TT, UA, US, UZ, VN, ARIPO patent (KE, LS, MW, SD, SZ, UG), Eurasian patent (AM, AZ, BY, KG, KZ, MD, RU, TJ, TM), European patent (AT, BE, CH, DE, DK, ES, FI, FR, GB, GR, IE, IT, LU, MC, NL, PT, SE), OAPI patent (BF, BJ, CF, CG, CI, CM, GA, GN, ML, MR, NE, SN, TD, TG).

Published
With international search report.

(54) Title: METHOD AND DEVICE FOR TREATING DUCTS

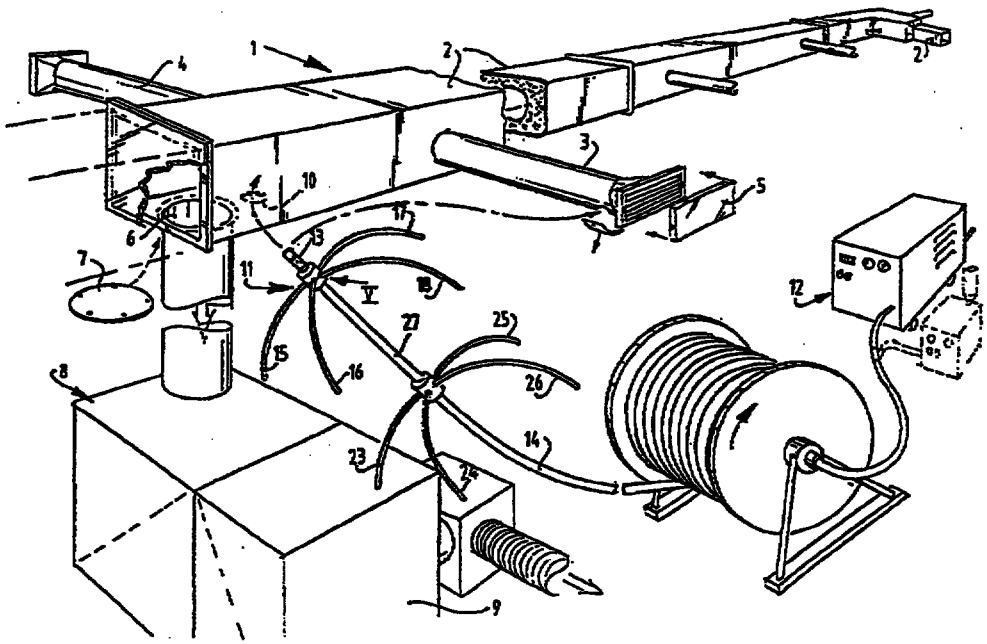

(57) Abstract

The invention relates to a method for cleaning ventilation ducts (2). For this purpose an underpressure is generated in the duct and a jet nozzle (13) connected to a source of fluid, for instance pressurized air (12), is guided through the duct in roughly the centre of the cross-sectional area thereof. The air jet loosens the accumulated dirt which is sucked out by the vacuum (6, 8).