25/05/05
2005033162

162162

(12) INTERNATIONAL APPLICATION PUBLISHED UNDER THE PATENT COOPERATION TREATY (PCT)

(19) World Intellectual Property Organization
International Bureau

(43) International Publication Date
10 June 2004 (10.06.2004)

PCT

(10) International Publication Number
WO 2004/049482 A3

(51) International Patent Classification[7]: H01M 8/00, 8/04

(21) International Application Number:
PCT/JP2003/014875

(22) International Filing Date:
21 November 2003 (21.11.2003)

(25) Filing Language: English

(26) Publication Language: English

(30) Priority Data:
2002-342412 26 November 2002 (26.11.2002) JP

(71) Applicant (*for all designated States except US*): CASIO COMPUTER CO., LTD. [JP/JP]; 6-2, Honmachi 1-chome, Shibuya-ku, Tokyo 151-0071 (JP).

(72) Inventor; and

(75) Inventor/Applicant (*for US only*): BITOH, Hiroyasu [JP/JP]; 13-1, Shinmachi 8-chome, Oume-shi, Tokyo 198-0024 (JP).

(74) Agent: KASHIMA, Hidemi; 5-4-18, Ozenji Nishi, Asao-ku, Kawasaki-shi, Kanagawa 215-0017 (JP).

(81) Designated States (*national*): AE, AG, AL, AM, AT, AU, AZ, BA, BB, BG, BR, BY, BZ, CA, CH, CN, CO, CR, CU, CZ, DE, DK, DM, DZ, EC, EE, ES, FI, GB, GD, GE, GH, GM, HR, HU, ID, IL, IN, IS, KE, KG, KP, KR, KZ, LC, LK, LR, LS, LT, LU, LV, MA, MD, MG, MK, MN, MW, MX, MZ, NI, NO, NZ, OM, PG, PH, PL, PT, RO, RU, SC, SD, SE, SG, SK, SL, SY, TJ, TM, TN, TR, TT, TZ, UA, UG, US, UZ, VC, VN, YU, ZA, ZM, ZW.

(84) Designated States (*regional*): ARIPO patent (BW, GH, GM, KE, LS, MW, MZ, SD, SL, SZ, TZ, UG, ZM, ZW), Eurasian patent (AM, AZ, BY, KG, KZ, MD, RU, TJ, TM), European patent (AT, BE, BG, CH, CY, CZ, DE, DK, EE, ES, FI, FR, GB, GR, HU, IE, IT, LU, MC, NL, PT, RO, SE, SI, SK, TR), OAPI patent (BF, BJ, CF, CG, CI, CM, GA, GN, GQ, GW, ML, MR, NE, SN, TD, TG).

Declarations under Rule 4.17:

— *as to applicant's entitlement to apply for and be granted a patent (Rule 4.17(ii)) for the following designations AE, AG, AL, AM, AT, AU, AZ, BA, BB, BG, BR, BY, BZ, CA, CH, CN, CO, CR, CU, CZ, DE, DK, DM, DZ, EC, EE, ES, FI, GB, GD, GE, GH, GM, HR, HU, ID, IL, IN, IS, KE, KG, KP, KR, KZ, LC, LK, LR, LS, LT, LU, LV, MA, MD, MG, MK, MN, MW, MX, MZ, NI, NO, NZ, OM, PG, PH, PL, PT, RO, RU, SC, SD, SE, SG, SK, SL, SY, TJ, TM, TN, TR, TT, TZ, UA, UG, UZ, VC, VN, YU, ZA, ZM, ZW, ARIPO patent*

[Continued on next page]

(54) Title: POWER SUPPLY SYSTEM AND ABNORMAL DETECTION METHOD FOR THE POWER SUPPLY SYSTEM

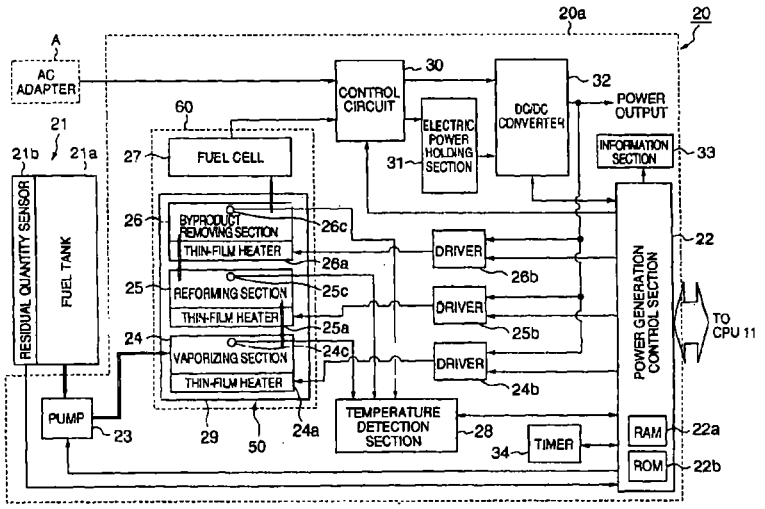

(57) Abstract: A power supply system for producing electric power comprising at least a power generation section for generating power comprises at least one chemical reaction section to which fuel for power generation is supplied; heating sections for heating the chemical reaction section; and comprises a temperature detection section for detecting the temperature of the chemical reaction section that comprises an abnormal judgment means which judges abnormalities in the power supply system are occurring when discriminated that the temperature change of the chemical reaction section is not the proper variation quantity based on the heat of the heating sections.

WO 2004/049482 A3

ACTION