MULTIPLE HULL AIR RIDE BOAT

This invention relates to the field of marine vessels made more efficient in operation by the use of a supporting pressurized gas cushion disposed in a recess in the underside of the vessel's hull.

This invention is a further improvement to applicant's earlier inventions in this field that are generally entitled "Air Ride Boat Hulls". All of these inventions require the introduction of pressurized gas into a recess in the underside of a boat hull to increase operating speeds and load carrying capabilities and improve stability. The improvements are the result of the pressurized gas cushion supporting some eighty to ninety percent of boat weight in most cases. The efficiency improvements at high speed are mainly the result of a reduction, normally by several orders of magnitude, of wetted area drag compared to a more conventional hull form.

The instant invention offers significant advances over applicant's earlier patents from the standpoint of use of multiple, primarily parallel and widely spaced, hulls. The effect of this is to change and improve vessel stability and resistance and performance characteristics, in many instances, compared to a more generic air cushion supported marine craft such as the Surface Effect Ship (SES). The prior art Surface Effect Ship (SES) has thin parallel sidehulls that are joined transversely fore and aft by full span flexible seals--the space thus formed is pressurized with air to provide a large lifting force. As such, it can be seen that the ship has a single rather wide rectangular footprint on the water's surface.

The U.S. Navy funded some studies in the early eighties of a boat that utilized catamaran-like sidehulls with each sidehull a generic SES. As stated before, the generic SES is a pressurized air cushion vehicle that incorporates full span flexible seals fore and aft (bow and stern) between parallel sidehulls. In the Navy's concept, the twin generic SES sidehulls were separated by

This Sheet Has Been Replaced
THIS SHEET HAS BEEN REPLACED

and connected to a cross deck or wetdeck structure. Not only were their sidehulls parallel, but each sidehull had sides that were thin and plate-like and ran completely up to the wetdeck. Outward extensions of the wetdeck actually formed the upper surface of the pressurized gas recesses. This can be seen from Figure 2, page 302, from an article titled: "The Surface Effect Catamaran--Progress in Concept Assessment" by F.W. Wilson, et al, pages 301-311, Naval Engineer's Journal, May 1983, published by the Americana Society of Naval Engineers, Inc., 1452 Duke Street, Alexandria, Virginia 22314. That article gives a detailed summary of the Navy's catamaran sidehull air cushion vehicle project. For purposes of simplification, the Navy's project will be referred to as SECAT (their acronym made from Surface Effect CATamaran) in the remainder of this document.

SECAT's idea was that each sidehull's flexible bow seals would give to waves and they could pass through the sidehull recess without molestation unless they were of sufficient height to contact the recess wetdeck. While the SECAT's analytical and model studies were encouraging there appears to have been no follow-on efforts on actual full size or prototype vessels. SECAT also requires extra structural weight for the long thin cantilevered sidehull plates and would have very poor off-cushion performance. It would appear that concern for the aforementioned plus the very high, narrow, and high maintenance flexible seals in each sidehull recess with the related tremendous increase in wetted area resistance in high seas, due to the extra vertical movement of the flexible seals on the inboard sides of each sidehull and resulting increases in wetted area, compared to a generic single chamber SES, probably discouraged further efforts.

U.S. Patent No. 1,307,135 uses dual gas cushion floats with the floats supplied with exhaust gas from an engine. The main intent in this publication is to make a

This Sheet Has Been Replaced



THIS SHEET HAS BEEN REPLACED

device to aid in performance of a seaplane, or hydroaeroplane as he calls it, when the seaplane is either waterborne or airborne as can be realized upon examination of lines 96-106, page 2, of the patent which states: "Furthermore, it will be appreciated, that when the hydroaeroplane is in flight through the air, a corresponding entraining action will ensue between the aquafoils and supporting pressures, supplemented of course by the exhaust pressures, and the resulting diminution in frictional resistance, in this instance, will be measurable because of the relatively lighter density of the elastic fluid which is thus introduced between the aquafoils and the air pressure." This is further shown by lines 22-24, page 2, of U.S. Patent No. 1,307,135 which states: "The float is shown as supporting a fuselage 8 by struts 9, and aerofoils representing a supporting unit are indicated by 10." The supporting unit 10 is actually the wing of an aircraft.

U.S. Patent 4,393,802 discloses a monohull with a center pressurized air cushion and with dual outer recess that are open at the aft end with no aft sealing means to restrain pressure in a side gas cushion. U.S. Patent Nos. 3,191,572; 3,606,857, and 4,031,841 offer variations of air lubricated multihulls. However, all have air layers that cannot be sealed at their aft ends since they do not have an aft air cushion seal. They cannot therefore seal air pressure in a cavity or recess under a sidehull. They simply use ram or blower pressurized air to lubricate the underside of the sidehulls and/or as a means to accelerate water out an open aft end of the air lubricated underside of a sidehull. Because they have no means to restrain gas cushion pressure in sidehull recesses and therefore cannot support a majority of craft weight with pressurized gas cushions.

The object of the instant invention is to offer the advantages of previous Air Ride boat hull inventions

This Sheet Has Been Replaced



THIS SHEET HAS BEEN REPLACED

coupled with further improvements in stability and performance.

The present invention provides a boat having supporting gas cushions disposed in catamaran-like sidehulls with said catamaran-like sidehulls in mechanical communication with connecting hull structure, and with said supporting gas cushions supplied with pressurized gas by gas pressurization means, characterized by a recess in each catamaran-like sidehull with said recesses at least partially restraining the pressurized gas cushions, each of said catamaran-like sidehulls have inner and outer sidewalls, with the recess in at least one of said catamaran-like sidehulls, as seen in a horizontal water contacting plane of said boat, enlarging in width over at least a portion of its longitudinal length going aft from its forward portions when said boat is operating at speeds of over 25 knots in a calm sea with its gas cushions pressurized to a sufficient pressure to support a majority of boat weight.

Preferably, the sidehulls can be substantially boat shaped with an essentially pointed bow shape when viewed in a plane that intersects a calm sea waterline when the boat is underway at high speed. The sidehulls can be either symmetrical or asymmetrical. Further, either one or both of a sidehull's sidewall's water contacting surfaces may diverge to accomplish a widening of the air cushion going from forward to aft. A sidehull's sidewall water contacting surface may diverge outward from forward and become parallel over at least a part of its after portions. A sidehull's outer sidewall's water contacting surfaces may be wider than the sidehull's inner sidewall's water contacting surfaces. Further, water contacting surfaces of a sidehull's sidewall may preferably be more hard chine or flatter forward going to more rounded shapes aft. Further, a sidehull inner sidewall's lower surfaces may be, on average, higher in

This Sheet Has Been Replaced



THIS SHEET HAS BEEN REPLACED

elevation than the sidehull outer sidewall's lower surfaces. Further, the sidehulls may extend forwardly of the main hull structure. Further, a center bow may be utilized where such a center bow adds to vessel fore and aft stability and reduces wetdeck wetting especially when the vessel is operating at high speeds in heavy seas. The center bow may extend forwardly of the sidehulls. Further, the center bow may be made with different shapes such as the preferred deep-V, inverted-V, or others. Further, there may be provided substantially vertical steps that reduce the amount of vertical surface wetted sidehull area when operating in rough seas. Ambient air is fed downward into the vertical steps. The vertical steps may be slanted so that water is directed not only outward from the sidehull but also downward thereby adding lift to the sidehull. The shape of a sidehull may be made wider forward and narrower aft in way of the vertical steps thereby reducing the rearward force of spray impinging on the sidehull steps. The sidehull may be full width below the narrowing stepped portion thereby giving a full width gas cushion and hence a full width lifting surface while still offering the advantage of tapered sidehull sides in way of the vertically oriented vented steps. There may be provided an air flow turbulence generator on the underside of the wetdeck to thereby restrict air flow under the wetdeck and as a result cause a buildup of static air pressure lifting force under the wetdeck. Movable bow and/or recess seals may be provided that are movable in relation to the sidehulls. A movable bow seal that may be utilized in conjunction with a pointed bow shape forward of the movable bow seal thus allowing for a simple fixed wave piercing bow with its related low cost and attractive appearance. The movable bow seal concept could include a series of seals or elements with each being able to follow the water surface thus creating an efficient gas seal. The bow seals are

This Sheet Has Been Replaced

THIS SHEET HAS BEEN REPLACED

preferably able to seal themselves from the side and also following seals help in the sealing of seals preceding them. Preferably the movable bow seals have trailing surfaces that curve or angle to match movement of a following seal thus resulting in good sealing of pressurized gas in the gas cushion. The movable seals are preferably made of structurally strong materials which is possible since it is not necessary that such movable seals utilize flexible materials for construction. An advantage of the optional movable seals is that the movable seals can be attached by hinges or other simple means to the hull. Preferably the optional movable bow seals are made with shaped lower surfaces, such as a preferred shape inverted-V, to provide good water surface tracking and reduced wave impact loadings. Secondary bow shaped members can be interspersed in the gas cushion recess to assist in providing hull stability and also help break up waves under the hull when operating in rough seas. The secondary bow shaped members may be shaped like inverted-V's with their lower portions located proximal the sidehull's sides thus adding to hull stability in roll as well as reducing inside of recess wetting downstream of the inverted-V seals. A downwardly force biased movable seal may be provided positioned between fore and aft sidehull pressurized gas cushions. The downwardly force biased movable seal may be made up of multiple water contacting ski-like elements. The secondary bow shaped member inside of the recess may be biased, or lower, to the outboard side than the inboard side of the recess thereby adding further to roll stability of the boat. The structurally sound and reliable fixed stern seal may optionally incorporate movable stern seal element(s) to aid in gas sealing, controlling of vessel trim, and/or directing water flow to a propulsor that is positioned aft of the movable stern seal element. The fixed stern seal may have a lower surface that is somewhat more flat than a

This Sheet Has Been Replaced



THIS SHEET HAS BEEN REPLACED

forward portion of the fixed stern seal thus providing a high efficiency planing surface for the aft end of the boat to ride on. The stern seal may have a lower surface that has a low wave impact and is at least partial V-shape when seen in operation from a bottom plan or fisheye view. An inset may be provided into the stern seal to reduce the high resistance wetted area of the stern seal. Pressurized gas may be supplied to the inset in the stern seal. The fixed structural portion of the stern seal may extend, in mathematical summation of its parts, across a majority of the width of the recess. Fixed structural portions of the stern seal, as seen in a vertical transverse plane of the hull, may be angled to horizontal over a majority of their width to reduce wave impact forces in rough seas. Gas pressure control means can be incorporated that can regulate gas pressure in at least portions of the recesses. Regulation of gas pressure in such recess portions can help in maintaining best trim of the vessel in heavy seas. A controller may be used to control operation of gas pressure control means that in turn controls gas pressures in the recesses. The just mentioned controller may receive as inputs hull orientation and values of pressures in the hull recesses.

In accordance with the preferred embodiment of the invention, the widely spaced long and thin air cushion hulls, in combination, have a much reduced low or "hump" speed resistance characteristic than does a single wide air cushion hull. However, at very high speeds a large wide air cushion hull with its single cushion generally has less resistance. That is due in part to the added wetted area resistance of the necessary extra sidewalls on the inboard sides of the separated catamaran-like sidehulls. Some effort has been made in the instant invention to reduce that wetted area effect by use of new concept vertically oriented steps that are preferably vented by surface air supplied downward along the vertical

This Sheet Has Been Replaced



THIS SHEET HAS BEEN REPLACED

steps. It is preferable to have the sidewalls taper inward going aft in way of the vertical steps to reduce the drag force due to the impingement of water spray on the steps.

The instant invention accomplishes the preceding, in its optimum configuration, while using essentially boat shaped sidehulls that, in their preferred embodiment, have a generally pointed bow and truncated stern shape as seen in a dynamic waterline plane where the water contacts the sidehull. At least one of the sidehull keels diverges outward aft of the bow and then become substantially parallel over most of its after length. The sidehulls are symmetrical in the preferred embodiment; however, asymmetrical sidehulls can be used. Use of fixed and/or movable seals can also be used in or proximal to the sidehull ~~pressurized~~ gas recesses.

Another embodiment of the instant invention uses narrower inboard sidewalls on catamaran-like air cushion sidehulls than outboard sidewalls. The reason for this is that the majority of hull transverse stability moment forces are provided by the outboard sidewalls due to their much greater distance from the vertical centerline plane of the hull. Therefore, it is of limited value from a transverse stability standpoint to have a wide inboard sidewall and use of narrower inboard sidewalls yields less wetted area hull resistance.

Further to reducing hull resistance, my studies have shown that use of a harder or more defined chine forward going a more rounded sidewall shape aft yields advantages. The harder chine forward gives better stability in a seaway while the more rounded sidewall shape aft provides less resistance. The rounded sidewall shape aft is generally in the form of circular arc shapes.

It is also preferred that the lower surfaces of the inboard sidewalls terminate higher in elevation than the outboard sidewalls lower surfaces. The effect of this

This Sheet Has Been Replaced

THIS SHEET HAS BEEN REPLACED

is to reduce hull resistance since less of the inboard sidewalls are in the water. This is possible because the distance of the inboard sidehull from the vertical centerline plane of the hull is less and therefore it sees less vertical movement during hull rolling.

As stated, the sidehulls, in their preferred embodiment, have substantially pointed bows that allow the use of shallow recesses since the pointed bows divide an oncoming wave and direct it to either side of a sidehull rather than allowing its full passage into a sidehull's recess. The sidehulls have rather boat shaped pointed bows and truncated sterns, as seen in outline in a horizontal waterline cross section of a sidehull, in its preferred embodiment. This compares to the SECAT where each of SECAT's sidehulls have a rectangular footprint on the water surface as can be seen in Figure 11, page 306, of the preceding referenced SECAT article. Further, the preferred embodiment having vertical steps in the sidehulls will greatly limit the increase of wetted area resistance on the outside or sea surface sides of the sidehulls when operating in heavy seas. Neither of the just mentioned advantages reduce performance and will, indeed, provide for at least reasonably good conventional catamaran-like hull performance with the blower system off. That is because the relatively shallow gas cushions and optional recess seal members make for much more hull like undersurfaces than did the SECAT's twin air cushion design. That is because the SECAT's design used full, to the wetdeck, depth recesses with full depth flexible seals fore and aft. That design used parallel thin sideboards, that extended all the way to the wetdeck, to form each side of the catamaran sidehulls. It can easily be seen that the SECAT's design must have functioned much like a lilypad with the blowers off.

The use of seals to divide portions of the recess also offer advantages. They reduce the amount of recess

This Sheet Has Been Replaced

THIS SHEET HAS BEEN REPLACED

surface wetting when operating in heavy seas. This is particularly so when the preferred inverted-V seal design is utilized since such a shape has its lowest point at the sidehull sides thereby directing waves away from recess vertical surfaces downstream of the inverted-V seals. The recess seals also provide fore and aft smaller recesses that can be pressurized differently to help trim the vessel. The differential pressurization is accomplished by use of pressure control valves that are directed by an on-board controller that senses hull orientation and pressures in the recesses.

In the case of use of the separated fore and aft gas cushions in the sidehulls, my studies have shown that a movable seal, that is force biased downwardly by a spring or other force generating member in its preferred configuration, that is positioned between the gas cushions is desirable. This provides for an efficient water following movable seal. The use of the downward force on the seal provides for such instance where the forward gas cushion is pressurized at greater pressure than the aft gas cushion. The reason for need of the movable seal is that the forward and aft ends of the sidehulls follow the wave patterns while the more middle sections of the sidehulls can see rising and lowering wave patterns inside the air cushions.

In the preferred embodiment, the center bow - disposed inward, and generally in part forward, of the sidehulls offers significant additional advantages. The first is in appearance where a rather yacht-like pointed bow, as seen from topside or in profile, can be realized if the center bow extends forwardly. The second is in providing good ride qualities in rough seas in that the center bow helps to prevent bow pitch down of the boat in heavy seas. The third is that the center bow helps prevent wetdeck slamming when running in very heavy seas as it tends to lift the forward part of the boat as a

This Sheet Has Been Replaced



THIS SHEET HAS BEEN REPLACED

large wave is encountered and then directs the wave away from the wetdeck.

In the drawings:

Figure 1 presents a right side elevational view of a boat in accordance with the present invention.

Figure 2 is a bottom plan view of the boat of Figure 1;

Figure 3 is a right side elevational view of the boat of Figure 1 when the boat is operating in heavy seas with its bow pitched upward;

Figure 4 is a centerline cross sectional view taken on line 4-4 of Figure 2;

Figure 5 is a cross sectional view taken on line 5-5 of Figure 2;

Figure 6 is a cross sectional view taken on line 6-6 of Figure 2;

Figure 7 is a top plan view, with the deck removed, of the boat of Figure 1;

Figure 8 is a cross sectional view taken on line 8-8 of Figure 4;

Figure 9 is a front elevational view of the boat of Figure 1;

Figure 10 is a rear elevational view of the boat of Figure 1;

Figure 11 is a cross sectional view taken on line 11-11 of Figures 2, 5, 6 and 7;

Figure 12 is a cross sectional view taken on line 12-12 of Figures 2, 5, 6, and 7;

Figure 13 is a cross sectional view taken on line 13-13 of Figure 2;

Figure 14 is a perspective view of the seals shown in Figure 13;

Figure 15 is a cross sectional view of the intermediate movable seals of the starboard sidehull, as taken through line 15-15 of Figure 2;

Figure 16 is a cross sectional view taken on line 16-16 of Figure 2;

THIS SHEET HAS BEEN REPLACED

Figure 17 is a cross sectional view taken on line 17-17 of Figure 2;

Figure 18 is a cross sectional view taken on line 18-18 of Figure 2;

Figure 19 is a right side elevational view of another embodiment of the boat having severely elongated forwardly extending sidehull bows;

Figure 20 is a bottom plan view of the boat of Figure 19;

Figure 21 presents a cross sectional view taken on line 21-21 of Figure 20;

Figure 22 is a transverse cross sectional view taken on line 22-22 of Figure 20;

Figure 23 is a transverse cross sectional view taken on line 23-23 of Figure 20;

Figure 24 is a transverse cross sectional view taken on line 24-24 of Figure 20;

Figure 25 is a transverse cross sectional view taken on line 25-25 of Figure 20;

Figure 26 is a transverse cross sectional view taken on line 26-26 of Figure 20;

Figure 27 is a transverse cross sectional view taken on line 26-26 of Figure 20.

Figure 28 is a transverse cross sectional view taken on line 28-28 of Figure 20;

Figure 29 is a transverse cross sectional view taken on line 29-29 of Figure 20;

Figure 30 is a perspective view of some typical intermediate movable seal elements and a seal hinge pin; and

Figure 31 is a similar view showing an intermediate seal element and actuator.

With reference to the drawings and in particular to Figure 1, Figure 1 shows a boat 37 that is running in a calm sea as shown by sea surface waterline 34. Shown is the starboard sidehull 95, starboard sidehull outer

This Sheet Has Been Replaced



THIS SHEET HAS BEEN REPLACED

sidewall 113, sidehull chine 42, main hull upper chine 72, main hull center bow 38, deck line 46, transom 97, propulsor 131 (in this case a surface propeller drive), adjacent to the hull water surface 36, and vertically oriented air vented step compartments 47. The vertically oriented ventilated step compartments 47 include an angled step line 48 and a tapered vertically oriented step 49 in these preferred embodiments. The vertically oriented ventilated steps 47 reduce the wetted area of the starboard sidehull 95 as can be seen by examination of the sea surface waterline 34. This reduction of wetted surface area can be even more pronounced when operating in rough seas.

Figure 2 presents a bottom plan view of a boat 37 that shows the connecting hull structure 99 whose underside is the wetdeck 41 which includes an air flow turbulence generator 39. The connecting hull structure 99 is normally in mechanical communication with the center bow 38, port sidehull 96 and starboard sidehull 95 in the preferred embodiment of the instant invention. The wetdeck 41 is also bounded by the transom 97 and main hull upper chines 72 and 73 in this instance. The center bow is preferably centered around the boat's vertical centerline plane 32; however, more than one center bow 38 can be used and the center bow 38 need not be centered around the boat's vertical centerline plane 32. The boat 37 has a vertical centerline plane 32, a port sidehull vertical centerline plane 33, and a starboard sidehull vertical centerline plane 98. Also shown are the deck line 46, propulsors 131, sidehull outer chines 42 and inner chines 43, sidehull outer keels 44 and inner keels 45, port sidehull inner sidewall 110, port sidehull outer sidewall 111, starboard sidehull inner sidewall 112, starboard sidehull outer sidewall 113, pressurized gas supply ducts 84, and sidehull forward recesses 58, intermediate recesses 59, and aft recesses 60. It is to

This Sheet Has Been Replaced

THIS SHEET HAS BEEN REPLACED

be noted that any number of recesses , from one to many, can be incorporated into either sidehull 95 and 96 and that other hull members, such as the center hull 38, can also include pressurized gas recesses if desired.

Figure 2 also shows fixed inverted-V shaped recess seals in the port sidehull and a combination of movable, relative to the boat hull, seals and fixed seals in the starboard sidehull. It would normally be preferred to utilize the same seal configurations in both sidehulls; however, a combination such as is shown would be quite workable. The fixed seals are forward seal 90, intermediate seal 89, and aft seal 88. Angled seal portions 100, as seen in a vertical transverse plane of the boat, compare to more horizontal lower seal portions 101. The use of more angled surfaces 100 forward gives best ride qualities in rough seas while the more horizontal lower surfaces 101 give best hydrodynamic efficiencies so the combination is warranted. The port aft seal 88 includes an inset 93 that is supplied with pressurized gas from a recess 60 or other source by conduit 94. Supplying the inset 93 with pressurized gas makes a gas layer in the inset 93 and thereby reduces port aft seal 88 wetted area and hence wetted area resistance.

The optional sealing means in the starboard sidehull 95 are forward movable seals 51, 52, 53, and 54, intermediate movable seals 55 and 56, and aft movable seal 91. Substantially vertical, or parallel, sidehull inside surfaces 57 are normally used next to the movable seals and sidehull inside surfaces can diverge aft of such parallel sidehull inside surfaces 57 proximal the movable seals 51, 52, 53, 54, 55, and/or 56. Further descriptions of functions of these movable seals is given in following paragraphs; however, their primary intent is to provide better gas sealing than is possible with the fixed seals shown in the port sidehull.

The starboard sidehull 95 may be truncated forward and not have a pointed bow as is shown. An

This Sheet Has Been Replaced



THIS SHEET HAS BEEN REPLACED

This Sheet Has Been Replaced



optional variation of the instant invention is that a bow of a sidehull could be partially truncated so that there is little or no pointed center bow of a sidehull forward of the movable seal 51.

Figure 3 shows a starboard side profile view of the boat 37 when operating in heavy seas as seen by sea surface waterline 34. The center bow 38 is pitched up in this instance. It can be seen that the starboard sidehull 95 forward movable seals 51, 52, and 53 have extended downward below a keel line 44 to aid in sealing of pressurized gas.

Figure 4 shows the elevation of the wetdeck 41 aft of the center bow 38 where the center bow helps prevent wave slamming into the wetdeck 41. The wetdeck 41 is actually the underside of the connecting hull structure 99. Also shown is the air flow turbulence generator 39 and its effect on air flow, as shown by air flow arrows 40. The generated turbulence reduces air flow area and thereby increases air static pressure forward of the air flow turbulence generator 39 thus creating an added lift force acting on the wetdeck 41. The effect of this, of course, is to increase overall efficiency of the boat 37. Further shown in Figure 4 are gas pressurization cross flow ducting forward 82 and aft 83.

Figure 5 shows workings of the port sidehull 96 gas pressurization system and other features. The gas pressurization system shown here includes a gas pressurization device or blower drive motor 69, forward blower 67, forward gas flow control valve 75, gas inlet duct 86 gas discharge duct 85, aft blower 68, and aft flow control valve 76. The forward blower 67 supplies pressurized gas to the forward recess 58 and intermediate recess 59 in this instance and the aft blower supplies pressurized gas to the aft recess 60.

It is possible to regulate gas pressures in the recesses 58, 59, 60 to thereby dramatically improve

THIS SHEET HAS BEEN REPLACED

pitch, roll, and heave of the boat by use of the gas flow control valves 75 and 76. The operation of these valves is normally directed by a controller 79 that receives as inputs recess pressure readings from pressure transducers 87 through connectors 92. The controller 79 would also normally receive hull orientation data (pitch, roll, and yaw values) from a gyrostabilizer (not shown) and g-force acceleration values from an accelerometer (not shown) that would normally be mounted internal to the controller 79. The controller 79 processes said information and in turn sends out directing signals to the gas flow control valves 75 and 76. Controller function is such that if a pitch down by the bow condition is encountered that the controller 79 would open forward gas flow control valve 75 fully and restrict flow through the aft gas flow control valve 76. Such action would increase the gas pressure in forward recess 58 and intermediate recess 59 and decrease gas pressure in aft recess 60 thereby returning the boat 37 to a more normal trim. It is to be noted that gas flow control valves can be located between the blowers 67 and 68 and the recesses 58, 59, and 60 if desired. Also, gas flow control valves can be positioned to vent pressure from the recesses 58, 59, and 60 to accomplish the same thing although such an arrangement would not be as efficient as it would waste blower power.

Also shown in Figure 5 is an inset 93 into a fixed stern seal 88 more horizontal lower surface 101 that is supplied with pressurized gas from aft recess 60. A fixed intermediate seal 89 and fixed forward seal 90 are also shown. More angled seal surfaces 100 are also shown. Gas flow is shown by gas flow arrows 74.

Figure 6 is a cross sectional view illustrating the boat 37 in a bow pitched up orientation that can occur when running in a rough sea as is shown by sea surface waterline 34. The advantages of using movable forward seals 51, 52, 53, and 54 here are made clear as such seals

This Sheet Has Been Replaced



THIS SHEET HAS BEEN REPLACED

restrict gas flow leakage from intermediate recess 59 when the hull is clear of the water. It can be seen that, in this example, the forward recess 58 is clear of the sea surface 34 and therefore loses its pressurized gas until reentry into the water occurs. Also shown are intermediate movable seals 55 and 56 which are riding on recess waterline 35 in this example. It is to be noted that movable seal hinge pins 50 are shown in movable seals 51 and 55 only in this sidehull centerline view. An aft movable seal 91 that is controlled in positioning by actuator 62 is also shown. The aft movable seal 91 can help control the level of water in the aft recess 60 and can also aid in direction of water flow to the surface propeller propulsor 131 in this instance.

Figure 6 also shows the gas pressurization and control system. This includes a blower drive motor 61, forward blower 67, forward gas flow control valve 77, aft blower 68, aft gas flow control valve 78, inlet gas flow ducting 86, outlet gas flow ducting 85, gas flow arrows 74, pressure transducers 87, controller 79, and connectors 92. The operation and function of this gas pressurization system is basically the same as that described under Figure 5 so the reader is referred to that preceding description. However, Figure 6 adds that the controller 79 can also direct movement of a movable seal such as aft movable seal 91 by directing operation of actuator 62. Further shown in Figure 6 are a main drive motor 130, center bow 38, and deck line 46.

Figure 7 provides a plan view of a preferred gas pressurization system layout. In this system the port side blowers 65 and 66 are driven by port side blower motor 61 with gas flow to the blowers controlled by gas flow valves 75 and 76. Starboard side blowers 67 and 68 are driven by blower drive motor 69 and flow to the blowers is controlled by gas flow control valves 77 and 78. There are also interconnecting ducts 82 and 83 that

THIS SHEET HAS BEEN REPLACED

insure that pressurized gas is available to the port sidehull 96 in the event of failure of the port side blower motor 61 or vise versa. There would normally be valves 80 and 81 placed in the interconnecting ducts 82 and 83. Operation of the gas flow control valves 75, 76, 78, 79, 82, and 83 is orchestrated by a controller 79 through connectors 92.

Figure 8 shows operation of the vertically oriented air vented step compartments 47 similar to those shown in profile in Figure 1, 3, and 4. These step compartments 47 noticeably reduce the wetted area of a sidehull (or a single hull for that matter) and hence reduce the overall wetted area resistance of the hull. It is to be noted that the inboard side (lower side in Figure 8) of the port sidehull is substantially parallel to the vertical centerline plane 33 of the port sidehull in way of the vertically oriented air vented step compartments 47 while the outboard side (upper side in Figure 8) tapers inward toward the vertical centerline plane 33 as it goes aft toward the transom 97. The reason for tapering the sides inward is that this either reduces or eliminates the rearward resistance force caused by impingement of water, as shown by horizontal plane adjacent to the hull water surfaces 36, from preceding vertically oriented steps 49 onto following vertically oriented steps 49. Of course, vertically oriented step compartments 47 and/or the inward tapering of a side can be done on either or both sides of a sidehull and can also be applied to the center bow of other areas if applicable.

Figure 8 also shows that the outer chine 42 remains substantially parallel to the inner chine 43, both are substantially parallel to the vertical centerline plane 33, in the preferred embodiment of the invention. Examination of Figures 1, 3, and 4 shows that the vertically oriented air vented step compartments 47 actually stop at or above the chines 42 and 43 in the

THIS SHEET HAS BEEN REPLACED

preferred embodiment of the instant invention. This allows for a wider more efficient gas cushion and/or hull structure footprint on the water surface.

Figure 9 illustrates a bow view of a boat 37 and shows that the boat of this invention offers a very high wave clearing distance from the sea surface 34 to the wetdeck 41.

Figure 10 as well as Figure 11 further show water spray patterns that come off the hull, when operating at high speeds in calm seas.

Figure 11 shows a typical cross section as taken through the aft blowers 66 and 68. Shown are the blower discharge gas flow ducts 85, interconnecting gas flow ducts 83, interconnecting valve 81, and gas flow arrows 74.

Figure 11 also shows the starboard sidehull 95 movable seal member 55 having an inverted-V shape on its underside. An intermediate movable seal 55 would normally operate between substantially parallel or vertical inside surfaces 57 as are shown in the starboard sidehull 95. It is normally desirable to have some shape to the underside of a movable seal member, over at least part of its length, to provide best ride qualities in rough seas. Examination of the port sidehull 96 shows a preferred inverted-V shape to the upper surfaces of the aft recess 60. In this preferred embodiment, the recess surface is biased toward having more material on the outboard side than the inboard side. That is actually done on purpose since such biasing gives more lifting forces, when in water contact, outboard to the boat which adds to roll stability (i.e., lifting forces are further outboard from the boat's vertical centerline plane 32 resulting in a greater restoring roll moment).

Figure 12 shows a section taken through the forward gas flow control valves 75 and 77. Figure 12 also shows operation in rough seas with the port sidehull 96 recess 58 clear of the water and therefore vented of

THIS SHEET HAS BEEN REPLACED

pressurized gas while the starboard sidehull 95 recess retains gas pressure since its movable seal 52 extends downward below the keels 44 and 45 and thus at least partially seals against gas leakage. A forward movable seal 52 would, in the preferred embodiment, function between substantially parallel inside surfaces 57 of a sidehull as are shown in this starboard sidehull 95.

Figure 12 also shows a biasing of the upper surfaces of recess 58 in the port sidehull 96 in a similar manner as that shown in Figure 11. Note that the outward biasing of recess surfaces is not necessary for function of the invention and that symmetrical recess surfaces or, indeed, biasing of recess surfaces toward the inboard sides of the recesses can also be utilized. Further, though preferred, it is not necessary that sidehull sides be symmetrical about their vertical centerline plane for the instant invention to function.

From observation of Figures 5, 6, 11, and 12 it will be noted that average recess depth (distance above sidehull keels 44 and 45) is significantly less than the depth of the wetdeck 41 above the sidehull keels 44 and 45. This is a very important characteristic of the instant invention as compared to the SECAT, described under the preceding background of the invention section of this document, where the depth of the wetdeck and the depth of the recess are the same. The SECAT utilizes full depth flexible seals fore and aft in each sidehull recess in order to allow waves to pass through essentially unmolested so long as they are less than wetdeck height. In the preferred embodiment of the present invention the waves are parted with a pointed ship like bow at the forward end of each sidehull which thereby directs them away from the recess. Therefore, the present invention can utilize average recess depths that are only half or less of wetdeck depth. Actually, twenty-five percent of wetdeck depth is considered a reasonable and workable

This Sheet Has Been Replaced



THIS SHEET HAS BEEN REPLACED

number in most cases for the instant invention. The advantages of the shallower recesses of the instant invention are several, they include: 1) shallower draft with the blowers off, 2) an inherently stronger and lighter structure, and 3) better ride and handling characteristics with the blowers off.

Figure 13 shows the starboard sidehull 95 forward movable seals 51, 52, 53, and 54 in their extended downward position and in contact with the sea surface waterline 34. These forward movable seals 51, 52, 53, and 54 are attached to the sidehull recess 58 structure by hinge pins 50 in this instance. Only the most forward movable seal 51 shows the hinge pins 50 as the other hinge pins 50 do not pass through the sidehull centerline in this configuration. Operational control of the aftermost forward movable seal 54 is shown being accomplished by an actuator 62 in this case although an actuator is not necessary for function. It is also possible to use spring biased systems, dashpots, etc. (not shown) to provide restoring forces to one or all of the movable seals.

Figure 14 shows forward movable seals 51, 52, 53, and 54 in their retracted position. As shown in the preferred embodiment the movable seals not only overlap fore and aft but also overlap on their sides which is the preferred situation as it prevents gas flow leakage sideways from a recess when the recess is clear of the water surface. Figure 14 also shows best attachment means in the form of movable seal hinge pins 50. It is to be noted that the hinge pins 50 do not extend through movable seals 52, 53, and 54 as such would preclude the movement of movable seals 52, 53, and 54 in this instance.

Figure 15 shows the intermediate movable seals 55 and 56 disposed in aft recess 60. In this case the movable seals 55 and 56 are following the recess waterline 35 and the movable seals 55 and 56 are retracted. Also shown is a movable seal hinge pin 50. The method of

THIS SHEET HAS BEEN REPLACED

construction of these aft movable seals 55 and 56 involves a closed cell foam filer 70, and skin covering 71. This method of construction provides a very light weight and strong movable seal structure that is impervious to moisture since, in the preferred version, a closed cell plastic foam is used for the filler 70. This method of construction would preferably be applied to manufacture of all movable seals; however, other means of seal construction, including use of flexible seal materials could be utilized.

Figure 16 shows an actuator 62 used to position an aft movable seal 91 in the starboard sidehull 95. It is to be noted that some shape is provided in this particular version of the aft movable seal 91.

Figure 17 shows an optional dashpot damper or shock absorber 63 and starboard sidehull aft movable seal 91. Some shape has been added to the underside of the aft movable seal 91 to reduce water impact loadings in rough seals. It is to be noted that a simple spring (not shown) or other force biasing means could be used in conjunction with or in place of the shock absorbing dashpot 63 shown.

Figure 18 illustrates a preferred embodiment of a movable aft seal 91 that utilizes a simple gas spring pressure bellows 64 to control the positioning of the aft seal in the starboard sidehull 95. The actual water contacting member is in reality a plate like member of fiberglass or other material in the preferred embodiment of the invention. The advantage of using the gas spring bellows is: 1) pressurized gas is already available on board the boat, 2) the gas bellows not only acts as a shock absorbing member but also does the positioning of the movable aft seal, and 3) positioning of the movable aft seal 91 can easily be controlled using outputs from the controller presented in Figures 5, 6, and 7 to regulate a gas pressure valve (not shown) that regulates pressure in the gas spring bellows 64.

This Sheet Has Been Replaced

THIS SHEET HAS BEEN REPLACED

This Sheet Has Been Replaced



Figures 19-29 illustrates an embodiment of a boat 37 with severely elongated forwardly extending sidehulls as shown by starboard sidehull 95. This offers the advantage of longer more efficient sidehulls and better rough sea ride qualities since the sidehull bows can actually run through a wave rather than over a wave. In this embodiment sidehull chine 42, normally referred to as a hard chine, terminates about midship. This is because, in this embodiment of the invention, the forward flatter surfaces of the hard chine sidehull outer sidewall 113 blend into a smoother more rounded surface as they approach midship. This approach yields good stability forward at the bow and minimum resistance aft.

Figure 20 presents a bottom plan of the boat 37 of Figure 19. Both the port sidehull 96 and starboard sidehull 95 have forward recesses 58 and aft recesses 60 as separated by movable seal members 103 through 108 that are restrained by hinge pins 50. Pressurized gas is injected into the forward recesses 58 through gas discharge openings 84 with gas flow arrows 74 showing direction of gas flow. Sidehull gas cushion aft seal lower surfaces 88 are led by angled surfaces 115 and 116. Sidehull inner chines 43 and inner keels 45 bound the starboard sidehull inner sidewall 112 and the port sidehull outer sidewall 113. The chines blend out going aft of midship in this preferred embodiment since the sidewalls go from flat to rounded going aft. The same situation applies to the port sidehull inner sidewall 110 and outer sidewall 111.

Also shown in Figure 20 are waterjet inlets 102. It is to be noted that Figure 20 presents asymmetrical sidehull and air cushion configurations with substantially straight port and starboard sidehull inner sidewalls 110 and 112. While the symmetrical sidehull bow concept, as shown in Figure 2 earlier, is preferred, any manner of symmetrical or asymmetrical sidehull shape if usable. That is because the symmetrical, or partially symmetrical,

THIS SHEET HAS BEEN REPLACED

sidehull shape deflects part of a wave to each side of the point of a sidehull bow while the asymmetrical sidehull presented in Figure 20 deflects all of a wave to the outside. Thus the symmetrical sidehull gives the best ride qualities in rough seas.

Figure 21 shows the bow of the sidehull pitched downward and into a wave on the sea surface 34. In this illustration, the pointed sidehull has entered a wave rather than riding over it which makes for a smoother ride. With the boat in a pitch down attitude as shown, the forward gas cushion would be automatically pressurized more than the aft gas cushion in order to correct to a horizontal attitude. As such, the port forward ride control valve 75 that supplies the port forward blower 65 would be automatically fully opened and the port aft ride control valve 76 that supplies the port aft blower 66 at least partially closed. That procedure provides maximum pressure to the forward recess 58 gas cushion and minimum pressure to the aft recess 60 gas cushion thus restoring the hull 37 to a more horizontal attitude.

It is preferred that movable seal elements, such as movable seal element 106 shown, that ride or plane on the air cushion water surface 35 be positioned between sidehull forward and aft recess 58, 60 air cushions. It is normally necessary that a way to force the movable seal elements downward, such as spring 109, be used to insure that the seal elements stay in place when the forward recess 58 gas cushion is at a higher pressure than the aft recess 60 gas cushion. It is to be noted also that additional gas cushion recesses can be used in either sidehull if desired.

Figure 22 shows shape of the port sidehull 95 and the starboard sidehull 96 at that forward section. It can be seen that the angle to horizontal of the lower surfaces are less than that of the upper surfaces. This provides

This Sheet Has Been Replaced



THIS SHEET HAS BEEN REPLACED

for a greater lifting force than submerging force which helps for restoration of a horizontal attitude after the craft 37 pitches down by the bow.

Figure 23 shows hull 37 shape forward including an optional center forward bow 38 positioned forward of the sidehull connecting wetdeck. Note that these forward portions of the port and starboard sidehull outer sidewalls 111, 113 have hard outer chines 42 and relatively flat surfaces that connect to the sidehull outer keels 44 in this preferred embodiment. The port and starboard sidehull inner sidewalls 110, 112 are very narrow and preferably substantially water slicing like a knife blade in order to impart minimum resistance.

Figure 24 illustrates the port and starboard aft blowers 66, 68 and how they supply pressurized gas to the back side of movable seals 103 through 108. The movable seals 103 through 108 are normally attached by hinge pins 50 to the hull 37. Air enters, as shown by air flow arrows 40, the port and starboard flow control valves 76, 78 and then is pressurized by aft blowers 66, 68 and discharged as indicated by gas flow arrows 74. Since the craft 37 is shown running level on a smooth sea surface in this example, the movable seals 103 through 108 are level and riding on the gas cushion water surfaces 35. There are normally substantially vertical adjacent to movable seal surfaces 57 on the hull.

With further reference to Figure 24, it is important to note that the port and starboard sidehull sidewalls 111, 113 have, preferably, become more rounded in shape on their lower portions than in the more forward sections illustrated by Figures 22 and 23. This approach of going from flatter angled or hard chine sidewall surfaces forward to more rounded surfaces aft provides good pitch stability forward coupled with best hydrodynamic efficiencies aft. It is also to be noted that the port and starboard sidehull's outer sidewalls

This Sheet Has Been Replaced

THIS SHEET HAS BEEN REPLACED

111, 113 are rather wider and deeper than the port and starboard sidehull's inner sidewalls 110, 112. This gives highest transverse stability and minimum resistance.

Figure 25 is a cross sectional view the same as Figure 24, however, in Figure 25, the craft 37 is in a roll to starboard. As such, movable seals 103 through 108 are angled as they follow the gas cushion water surface 35. It is preferred that movable seals rather than fixed seals, as were shown in the port sidehull of Figures 2 and 5 for example, be positioned between sidehull gas cushions as they will follow the sidehull inner or gas cushion water surfaces 35 whereas the fixed seals cannot. Other items shown in Figure 25 are the same as listed under the just preceding detailed description of Figure 24 so they will not be repeated here.

Figure 26 illustrates a typical preferred hull transverse cross section that occurs once aft and clear of the bow sections and any intermediate movable seals such as were shown in Figures 24 and 25. In the preferred case of a sidehull having only forward and aft gas cushions, it is desirable that a movable seal be positioned at about the middle of the waterline length of a sidehull or slightly forward of said middle of the waterline length.

It is important to realize that the port and starboard sidehull inner sidewalls 110, 112 are narrower and also terminate higher on their lower water contacting surfaces than the port and starboard outer sidewalls 111, 113. This provides for minimum hydrodynamic drag coupled with maximum stability in roll. This effect is further discussed in the description of Figure 27 which follows.

It is to be noted that the sidehull sidewall inner surfaces 115 and outer surfaces 116 are now angling inward in this preferred version of the instant invention.

Figure 27 is a cross sectional view which is the same as Figure 26 except the craft or hull 37 is in a roll to starboard. It is important to realize that the inboard

This Sheet Has Been Replaced



THIS SHEET HAS BEEN REPLACED

sidewalls of the sidehulls are narrower and also terminate higher on their lower water contacting surfaces than the outboard sidewalls in this preferred embodiment. This results in less resistance from the inboard sidewalls. Upon examination of Figure 27, it can be realized that the port recess gas cushion water surface 35 is restrained by substantially even height port sidehull inner and outer sidewalls 110 and 111 in this roll condition. It is also important to note that the starboard sidehull gas cushion water surface 35 is lower in elevation and therefore at a higher pressure providing a maximum roll correcting lifting moment from the starboard side which is due to the higher starboard sidehull gas cushion pressure.

Figure 28 shows the preferred inverted-V stern seal. Note the more extreme angling to horizontal of the recess inner and outer angled surfaces 115, 116. Note also that the extension of these surfaces 115, 116 upward results in their meeting in an apex of the most desired inverted-V shape. It is considered a definition of this invention that the meeting of such angled recess surfaces 115, 116 at the apex 114 to form an inverted-V, either directly or in an extension as shown here, is an inverted-V shape. It is also a desirable feature that this apex occur below a deck line 46 of the hull 37, at least over much of the shaping of the aft seals, as that defines a good final inverted-V shape for good rough sea seal ride qualities.

Figure 29 shows a section of the gas recess stern seals. It can be seen that they have developed into almost full span horizontal flat surfaces 88. There is still a small inverted-V section that meets at apex 114. In the optimum low resistance configuration, this goes to a full-width substantially flat seal surface 88 further aft as can be noted from examination of Figure 20. It is also desirable, from a minimum high speed resistance standpoint, that the port and starboard sidehull inner

THIS SHEET HAS BEEN REPLACED

sidewalls 110, 112 blend into the seal surface 88 in this area.

Figure 30 illustrates some typical intermediate movable seal elements 106, 107, 108 and a seal hinge pine 50. In this instance, the movable seal elements are at various elevations on their lower surfaces as they would be when following an irregular water surface. The downward force elements, shown as springs in earlier Figure 21, are not shown to simplify the illustration presented here in Figure 30.

Figure 31 shows a single movable seal element 106 and hinge pin 50 that is force biased and damped by a spring 109 and dashpot or shock absorber 63 that are attached to hull 37. While the shock absorber 63 and spring 109, either singularly or in combination as shown, are a good means to generate an additional downward force on the movable seal element 106, other means may be used. These include, but are not limited to, the force generating systems shown in preceding Figures 16, 17, and 18.

This Sheet Has Been Replaced



THIS SHEET HAS BEEN REPLACED

CLAIMS

1. ~~A boat having supporting gas cushions~~ disposed in catamaran-like sidehulls with said catamaran-like sidehulls in mechanical communication with connecting hull structure, and with said supporting gas cushions supplied with pressurized gas by gas pressurization means, characterized by a recess in each catamaran-like sidehull with said recesses at least partially restraining the pressurized gas cushions, each of said catamaran-like sidehulls having inner and outer sidewalls, with the recess in at least one of said catamaran-like sidehulls, as seen in a horizontal water contacting plane of said boat, enlarging in width over at least a portion of its longitudinal length going aft from its forward portions when said boat is operating at speeds of over 25 knots in a calm sea with its gas cushions pressurized to a sufficient pressure to support a majority of boat weight.

2. A boat having supporting gas cushions disposed in catamaran-like sidehulls with said catamaran-like sidehulls in mechanical communication with connecting hull structure, said supporting gas cushions supplied with pressurized gas by gas pressurization means, and said supporting gas cushions pressurized at sufficient pressure to support a majority of boat weight, characterized by said catamaran-like sidehulls being, at least in part, individually boat shaped with substantially more narrow bows than aft sections where said boat shape is defined by an intersection of said catamaran-like sidehulls and a calm sea surface waterline when said supporting gas cushions are pressurized at sufficient pressure to support a majority of boat weight and the boat is underway at speeds of more than 25 knots, said catamaran-like sidehulls having recesses in their undersides for restraining at least a part of said pressurized supporting gas cushions and a lower water

This Sheet Has Been Replaced

THIS SHEET HAS BEEN

contacting surface of said catamaran-like sidehull both, at least in part, bounds a recess and diverges further from the catamaran-like sidehull's vertical centerline plane going aft from proximal said recess' forward portions.

3. The boat of claim 2, characterized in that said lower water contacting surface that at least partially bounds a recess of the catamaran-like sidehull, after diverging, becomes substantially more parallel to the vertical centerline plane of the sidehull over at least portions of an aft section of said catamaran-like sidehull.

4. The boat of claim 2 or 3, characterized in that said recesses in the catamaran-like sidehulls enlarge in width by at least twenty-five percent from their forward sections to their aft sections.

5. The boat of claim 2, 3 or 4, characterized in that an average height of said recess above a lowest portion of a catamaran-like sidehull keel is less than fifty percent of a distance from the lowest portion of the catamaran-like sidehull keel to a wetdeck of said boat.

6. The boat of any of claims 2 to 5, characterized in that said catamaran-like sidehulls are asymmetrical when viewed in a calm sea surface waterline plane of said boat.

7. The boat of any of claims 2 to 6, characterized by a center bow in mechanical communication with said connecting hull structure.

8. The boat of claim 7, characterized in that said center bow extends, at least in part, forwardly of said sidehulls.

9. The boat of any of claims 2 to 8, characterized by at least one substantially rigid seal member disposed, at least partially, proximal one of said catamaran-like sidehull recesses and said substantially rigid seal member's underside, when viewed in at least one

This Sheet Has Been Replaced

THIS SHEET HAS BEEN REPLACED

vertical transverse plane of the boat, contains surfaces that are angled to horizontal over a majority of said seal member's width.

10. The boat of claim 9, characterized in that said substantially rigid seal member, as seen in a vertical transverse plane of the boat, extends over a majority of catamaran-like sidehull recess width.

11. The boat of claim 9, characterized in that said substantially rigid seal member comprises, at least in part, lower sealing surfaces that are substantially more horizontal, as viewed in a vertical transverse plane of the boat, than said substantially rigid seal member's surfaces proximal to and forward of said lower sealing surfaces.

12. The boat of claim 9, 10 or 11, characterized in that at least one of the substantially rigid seal members, as seen in a vertical transverse plane of the boat has an inverted-V shape.

13. The boat of any of claims 2 to 12, characterized by vertically oriented vented steps in a side surface of each of said catamaran-like sidehulls.

14. The boat of claim 13, characterized in that at least a part of said catamaran-like sidehull's side surface, as viewed in a horizontal plane of said boat, is closer to a vertical centerline plane of said catamaran-like sidehull over an aft portion than a more forward portion.

15. The boat of any of claims 2 to 14, characterized by first forward movable seals disposed proximal a forward portion of said catamaran-like sidehull recesses where said first forward movable seals are movable in relation to the boat.

16. The boat of claim 15, characterized in that said first forward movable seals, when in lower positions, extend below catamaran-like sidehull keels.

17. The boat of claim 15 or 16, characterized by a second forward movable seal that is movable in relation

THIS SHEET HAS BEEN REPLACED

to the boat and that is longitudinally positioned, at least in part, aft of and proximal to the first forward movable seal.

18. The boat of any of claims 2 to 17, characterized by an intermediate movable seal that is at least partially disposed proximal a catamaran-like sidehull recess with said intermediate movable seal movable in relation to the boat.

19. The boat of claim 2, characterized by a first and a second recess in each of the catamaran-like sidehulls, said first and second recesses, at least in part, separated by recess seal members.

20. The boat of claim 19, characterized in that the gas pressurization means is capable of supplying gas at different pressures to the first and the second recesses.

21. A boat having supporting gas cushions disposed in catamaran-like sidehulls with said catamaran-like sidehulls in mechanical communication with a connecting hull structure, said supporting gas cushions supplied with pressurized gas by gas pressurization means, and said supporting gas cushions pressurized at sufficient pressure to support a majority of boat weight, characterized by a recess in each catamaran-like sidehull with said recesses at least partially restraining the pressurized gas cushions, and lower water contacting surfaces of said catamaran-like sidehulls that both bound the recesses and diverge further, when the supporting gas cushions are pressurized at a sufficient pressure to support a majority of boat weight, from vertical centerline planes of said catamaran-like sidehulls going aft from proximal forward portions of said recesses and said lower water contacting surfaces of the catamaran-like sidehulls, after diverging, then become substantially more parallel to the vertical centerline planes of the sidehulls over at least portions of their aft sections.

This Sheet Has Been Replaced

THIS SHEET HAS BEEN REPLACED

22. The boat of claim 21, characterized in that said recesses in the catamaran-like sidehulls enlarge in width by at least twenty-five percent from their forward sections to their aft sections.

23. The boat of claim 21 or 22, characterized in that an average height of said recess above a lowest portion of a catamaran-like sidehull keel is less than fifty percent of a distance from the lowest portion of the catamaran-like sidehull keel to a wetdeck of said boat.

24. The boat of claim 21, 22 or 23, characterized in that said catamaran-like sidehulls are asymmetrical when viewed in a calm sea surface waterline plane of said boat.

25. The boat of any of claims 21 to 24, characterized by a center bow that is in mechanical communication with said connecting hull structure.

26. The boat of any of claims 21 to 25, characterized by at least one substantially rigid seal member disposed, at least partially, proximal one of said catamaran-like sidehull recesses and said substantially rigid seal member's underside, when viewed in at least one vertical transverse plane of the boat, contains surfaces that are angled to horizontal over a majority of said seal member's width.

27. The boat of claim 26, characterized in that said substantially rigid seal member, as seen in a vertical transverse plane of the boat, extends over a majority of catamaran-like sidehull recess width.

28. The boat of claim 26 or 27, characterized in that said substantially rigid seal member comprises, at least in part, lower sealing surfaces that are substantially more horizontal, as viewed in a vertical transverse plane of the boat, than said substantially rigid seal member's surfaces proximal to and forward of said lower sealing surfaces.

29. The boat of claim 26, 27 or 28, characterized in that at least one of the substantially

THIS SHEET HAS BEEN REPLACED

rigid seal members, as seen in a vertical transverse plane of the boat, has an inverted-V shape.

30. The boat of any of claims 21 to 29, characterized by a vertically oriented vented steps in a side surface of at least one of said catamaran-like sidehulls.

31. The boat of claim 30, characterized in that at least a part of said side surface of said catamaran-like sidehull in way of said vertically oriented vented steps, as viewed in a horizontal plane of said boat, is narrower over an aft portion than a more forward portion.

32. The boat of any of claims 21 to 31, characterized by a first forward movable seal disposed proximal a forward portion of one of said catamaran-like sidehull recesses where said first forward movable seal is movable in relation to the boat.

33. The boat of claim 32, characterized in that said first forward movable seal, when in lower positions, extends below a catamaran-like sidehull keel line of said catamaran-like sidehull.

34. The boat of claim 32 or 33, characterized by a second forward movable seal that is movable in relation to the boat and that is longitudinally positioned, at least in part, aft of and proximal to the first forward movable seal.

35. The boat of any of claims 21 to 34, characterized by an intermediate movable seal that is at least partially disposed proximal a catamaran-like sidehull recess with said intermediate movable seal movable in relation to the boat.

36. The boat of any of claims 21 to 35, characterized by the connecting hull structure being in mechanical communication with an air flow turbulence generator.

37. The boat of any of claims 21 to 36, characterized by a first and a second recess in each of

This Sheet Has Been Replaced

THIS SHEET HAS BEEN REPLACED

the catamaran-like sidehulls, said first and second recesses, at least in part, separated by recess seal members.

38. The boat of claim 37, characterized in that the gas pressurization means is capable of supplying gas at different pressures to the first and the second recesses.

39. A boat having supporting gas cushions disposed in catamaran-like sidehulls with said catamaran-like sidehulls in mechanical communication with connecting hull structure, said supporting gas cushions supplied with pressurized gas by gas pressurization means, and said supporting gas cushions pressurized at sufficient pressure to support a majority of boat weight, characterized by a center bow that extends forwardly of upper forward portions of said catamaran-like sidehulls with said center bow in mechanical communication with the connecting hull structure, said connecting hull structure extending from proximal an upper forward portion of said catamaran-like sidehulls to proximal an upper forward portion of said center bow thereby forming a boat shape with a substantially pointed bow as defined by deck lines of said boat as seen in a top plan view of said boat and said catamaran-like sidehulls have recesses in their undersides for restraining at least part of said pressurized supporting gas cushions, and wherein at least one of said catamaran-like sidehull recesses enlarges going aft from its forward portions.

40. The boat of claim 39, characterized by at least one substantially rigid seal member disposed proximal one of said catamaran-like sidehull recesses and said substantially rigid seal member's underside, when viewed in at least one vertical transverse plane of the boat, contains surfaces that are angled to horizontal over a majority of said seal member's width.

41. The boat of claim 40, characterized in that said substantially rigid seal member, as seen in a

THIS SHEET HAS BEEN REPLACED

vertical transverse plane of the boat, extends over a majority of catamaran-like sidehull recess width.

42. The boat of claim 39, 40 or 41, characterized by vertically oriented vented steps in a side surface of at least one of said catamaran-like sidehulls.

43. The boat of any of claims 39 to 42, characterized by a first forward movable seal disposed proximal a forward portion of one of said catamaran-like sidehull recesses where said first forward movable seal is movable in relation to the boat.

44. The boat of any of claims 39 to 43, characterized by a first and a second recess in each of the catamaran-like sidehulls, said first and second recesses, at least in part, separated by recess seal members.

45. The boat of claim 44, characterized in that the gas pressurization means is capable of supplying gas at different pressures to the first and the second recesses.

46. A boat having supporting gas cushions disposed in catamaran-like sidehulls with said catamaran-like sidehulls in mechanical communication with connecting hull structure, said supporting gas cushions supplied with pressurized gas by gas pressurization means, and said supporting gas cushions pressurized at sufficient pressure to support a majority of boat weight, characterized by each of said catamaran-like sidehulls having, at least in part, a substantially single bow with said catamaran-like sidehulls, at least in part, being lower than the connecting hull structure, said connecting hull structure having a wetdeck on its underside with said wetdeck extending a majority of a distance between the catamaran-like sidehulls, and said catamaran-like sidehulls having recesses in their undersides for restraining at least part of said pressurized supporting

This Sheet Has Been Replaced
THIS SHEET HAS BEEN REPLACED

gas cushions with a recess in one of said catamaran-like sidehulls, over at least a portion of its longitudinal length, enlarging in width going aft from its forward portions as seen in a horizontal water contacting plane of said boat when said boat is operating in a calm seal with the gas cushions pressurized to a sufficient pressure to support a majority of boat weight.

47. The boat of claim 46, characterized in that the recess in one of the catamaran-like sidehulls that is enlarging in width then becomes more constant in width over at least a portion of its longitudinal length.

48. The boat of claim 46 or 47, characterized in that said recesses in the catamaran-like sidehulls enlarge in width by at least twenty-five percent from their forward sections to their aft sections.

49. The boat of claim 46, 47 or 48, characterized in that an average height of said recess above a lowest portion of a catamaran-like sidehull keel is less than fifty percent of a distance from the lowest portion of the catamaran-like sidehull keel to a wetdeck of said boat.

50. The boat of any of claims 46 to 49, characterized in that said catamaran-like sidehulls are asymmetrical when viewed in a calm sea surface waterline plane of said boat.

51. The boat of any of claims 46 to 50, characterized in that a center bow in mechanical communication with said connecting hull structure.

52. The boat of claim 51, characterized in that said center bow extends, at least in part, forwardly of said sidehulls.

53. The boat of any of claims 46 to 52, characterized by at least one substantially rigid seal member disposed, at least partially, proximal one of said catamaran-like sidehull recesses and said substantially rigid seal member's undersides, when viewed in at least

This Sheet Has Been Replaced

THIS SHEET HAS BEEN REPLACED

one vertical transverse plane of the boat, contains surfaces that are angled to horizontal over a majority of said seal member's width.

54. The boat of claim 53, characterized in that said substantially rigid seal member, as seen in a vertical transverse plane of the boat, extends over a majority of catamaran-like sidehull recess width.

55. The boat of claim 53, characterized in that said substantially rigid seal member comprises, at least in part, lower sealing surfaces that are substantially more horizontal, as viewed in a vertical transverse plane of the boat, than said substantially rigid seal member's surfaces proximal to and forward of said lower sealing surfaces.

56. The boat of claim 53, characterized in that at least one of the substantially rigid seal members, as seen in a vertical transverse plane of the boat, has an inverted-V shape.

57. The boat of any of claims 46 to 56, characterized by vertically oriented vented steps in a side surface of at least one of said catamaran-like sidehulls.

58. The boat of claim 57, characterized in that at least a part of said side surface of said catamaran-like sidehull in way of said vertically oriented vented steps, as viewed in a horizontal plane of said boat, is narrower over an aft portion than a more forward portion.

59. The boat of any of claims 46 or 58, characterized by a first forward movable seal disposed proximal a forward portion of one of said catamaran-like sidehull recesses where said first forward movable seal is movable in relation to the boat.

60. The boat of claim 59, characterized in that said first forward movable seal, when in lower positions, extends below a keel of said catamaran-like sidehull.

This Sheet Has Been Replaced

THIS SHEET HAS BEEN REPLACED

61. The boat of claim 59, characterized by a second forward movable seal that is movable in relation to the boat and that is longitudinally positioned, at least in part, aft of and proximal to the first forward movable seal.

62. The boat of any of claims 46 to 61, characterized by an intermediate movable seal that is at least partially disposed proximal a catamaran-like sidehull recess with said intermediate movable seal movable in relation to the boat.

63. The boat of any of claims 46 to 62, characterized by a first and a second recess in each of the catamaran-like sidehulls, said first and second recesses, at least in part, separated by recess seal members.

64. The boat of claim 63, characterized in that the gas pressurization means is capable of supplying gas at different pressures to the first and the second recesses.

65. A boat having supporting gas cushions disposed in catamaran-like sidehulls with said catamaran-like sidehulls in mechanical communication with a connecting hull structure, said supporting gas cushions supplied with pressurized gas by gas pressurization means, and said supporting gas cushions pressurized at sufficient pressure to support a majority of boat weight, characterized by a first forward movable seal that is movable relative to the boat with said first forward movable seal disposed, at least partially, between substantially parallel internal surfaces of a catamaran-like sidehull and a recess in said catamaran-like sidehull that at least partially restrains the catamaran-like sidehull's pressurized supporting gas cushion and said recess enlarges aft of the catamaran-like sidehull's substantially parallel internal surfaces.

66. The boat of claim 65, characterized in that after enlarging, said recess becomes substantially

THIS SHEET HAS BEEN REPLACED

constant in width over at least portions of its aft sections.

67. The boat of claim 65 or 66, characterized in that said recesses in the catamaran-like sidehulls enlarge in width by at least twenty-five percent from their forward portions to their aft portions.

68. The boat of claim 65, 66 or 67, characterized in that an average height of said recess above a lowest portion of a catamaran-like sidehull keel is less than fifty percent of a distance from the lowest portion of the catamaran-like sidehull keel to a wetdeck of said boat.

69. The boat of any of claims 65 to 68, characterized in that said catamaran-like sidehulls are asymmetrical when viewed in a calm sea surface waterline plane of said boat.

70. The boat of any of claims 65 to 69, characterized by a center bow in mechanical communication with said connecting hull structure.

71. The boat of any of claims 65 to 70, characterized by at least one substantially rigid seal member disposed, at least partially, proximal one of said catamaran-like sidehull recesses and said substantially rigid seal member's underside, when viewed in at least one vertical transverse plane of the boat, contains surfaces that are angled to horizontal over a majority of said substantially rigid seal member's width.

72. The boat of any of claims 65 to 71, characterized by vertically oriented vented steps in a side surface of each of said catamaran-like sidehulls.

73. The boat of claim 72, characterized in that at least a part of said catamaran-like sidehull in way of said side surface, as viewed in a horizontal plane of said boat, is closer to a vertical centerline-plane of said catamaran-like sidehull over an aft portion than a more forward portion of said catamaran-like sidehull.

This Sheet Has Been Replaced

THIS SHEET HAS BEEN REPLACED

74. The boat of any of claims 65 to 73, characterized in that said first forward movable seal, when in lower positions, extends below a catamaran-like sidehull keel of said catamaran-like sidehull.

75. The boat of any of claims 65 to 74, characterized by a second forward movable seal that is movable in relation to the boat and that is longitudinally positioned, at least in part, aft of and proximal to the first forward movable seal.

76. The boat of claim 75, characterized in that said second forward movable seal extends, at least in part, transversely outward beyond said first forward movable seal.

77. The boat of any of claims 65 to 76, characterized by an intermediate movable seal that is at least partially disposed proximal a catamaran-like sidehull recess with said intermediate movable seal movable in relation to the boat.

78. The boat of any of claims 65 to 77, characterized by a first and a second recess in each of the catamaran-like sidehulls, said first and second recesses, at least in part, separated by recess seal members.

79. The boat of claim 78, characterized in that the gas pressurization means is capable of supplying gas at different pressures to the first and the second recesses.

80. The boat of any of claims 65 to 79, characterized by a movable seal that is positioned proximal an aft end of the catamaran-like sidehull's recess.

81. A boat having supporting gas cushions disposed in catamaran-like sidehulls with said catamaran-like sidehulls in mechanical communication with connecting hull structure, said supporting gas cushions supplied with pressurized gas by gas pressurization means,

This Sheet Has Been Replaced

THIS SHEET HAS BEEN REPLACED

and said supporting gas cushions pressurized at sufficient pressure to support a majority of boat weight, characterized by said catamaran-like sidehulls having recesses in their undersides for restraining at least part of said pressurized supporting gas cushions, substantially rigid seal members disposed, at least partially, proximal said catamaran-like sidehull recesses and said substantially rigid seal members' undersides, when viewed in at least one vertical transverse plane of the boat, contain surfaces that are angled to horizontal over a majority of said seal members' width, and wherein at least one of said catamaran-like sidehull recesses enlarges going aft from its forward portions.

82. The boat of claim 81, characterized in that at least one of said catamaran-like sidehull recesses enlarges by one or more step-like enlargements.

83. The boat of claim 81 or 82, characterized in that said catamaran-like sidehull recess, after enlarging, then becomes more constant in width over at least part of its aft portions.

84. The boat of claim 81, 82 or 83, characterized in that said substantially rigid seal member, as seen in a vertical transverse plane of the boat, extends over a majority of catamaran-like sidehull recess width.

85. The boat of any of claims 81 to 84, characterized in that said substantially rigid seal member comprises, at least in part, lower sealing surfaces that are substantially more horizontal, as viewed in a vertical transverse plane of the boat, than said substantially rigid seal member's surfaces proximal to and forward of said lower sealing surfaces.

86. The boat of any of claims 81 to 85, characterized by a step inset into lower sealing surfaces of the substantially rigid seal member thereby reducing a wetted area of said substantially rigid seal member.

This Sheet Has Been Replaced

THIS SHEET HAS BEEN REPLACED

87. The boat of claim 86, characterized by means to supply pressurized gas to said step inset into the lower sealing surfaces of the rigid seal member.

88. The boat of any claim 81 to 87, characterized in that at least one of the substantially rigid seal members, as seen in a vertical transverse plane of the boat, has an inverted-V shape.

89. The boat of any of claims 81 to 88, characterized by vertically oriented vented steps in a side surface of at least one of said catamaran-like sidehulls.

90. The boat of any of claims 81 to 89, characterized by a center bow in mechanical communication with said connecting hull structure.

91. The boat of any of claims 81 to 90, characterized by a first and a second recess in each of the catamaran-like sidehulls, said first and second recesses, at least in part, separated by recess seal members.

92. The boat of claim 91, characterized in that the gas pressurization means is capable of supplying gas at different pressures to the first and the second recesses.

93. The boat of any of claims 81 to 92, characterized in that the substantially rigid seal member's underside, when viewed in at least one vertical transverse plane of the boat, contains surfaces that are biased to one side of a vertical centerline plane of the catamaran-like sidehull.

94. The boat of any of claims 81 to 93, characterized by a movable seal with said movable seal positioned proximal an aft end of the catamaran-like sidehull's recess.

95. A boat having supporting gas cushions disposed in catamaran-like sidehulls with said catamaran-like sidehulls in mechanical communication with

THIS SHEET HAS BEEN REPLACED

connecting hull structure, said supporting gas cushions supplied with pressurized gas by gas pressurization means, and said supporting gas cushions pressurized at sufficient pressure to support a majority of boat weight, characterized by a first and a second recess capable of restraining at least portions of the catamaran-like sidehull's supporting gas cushions in each of the catamaran-like sidehulls, said first and second recesses in each of the catamaran-like sidehulls can be supplied with gases at different pressures by the gas pressurization means to thereby aid in controlling boat motions and one of said recesses in each catamaran-like sidehull enlarges going aft from forward portions of said recesses.

96. The boat of claim 95, characterized in that the gas pressurization means comprises a separate gas pressure supply source for the first and for the second recess.

97. The boat of claim 94 or 95, characterized in that the gas pressurization means further comprises a controller that directs a supply of gas to the first and the second recess with said controller receiving as inputs boat orientation readings.

98. The boat of claim 94, 95 or 96, characterized in that the gas pressurization means further comprises a controller that directs a supply of gas to the first and the second recess with said controller receiving as inputs values of pressures in the first and the second recess.

99. The boat of any of claims 95 to 98, characterized in that the gas pressurization means further comprises an interconnecting duct and valve that connects a recess in one sidehull with a recess in another sidehull.

100. A boat having supporting gas cushions disposed in catamaran-like sidehulls with said catamaran-like sidehulls in mechanical communication with

This Sheet Has Been Replaced

THIS SHEET HAS BEEN REPLACED

connecting hull structure, said supporting gas cushions supplied with pressurized gas by gas pressurization means, and said supporting gas cushions pressurized at sufficient pressure to support a majority of boat weight, characterized by said catamaran-like sidehulls having recesses in their undersides for restraining at least part of said pressurized supporting gas cushions and wherein at least one of said catamaran-like sidehull recesses enlarges going aft from its forward portions, and vertically oriented vented steps in side surfaces of the catamaran-like sidehulls, said side surfaces of the catamaran-like sidehulls, as viewed in a horizontal plane of said boat, are at least in part closer to a vertical centerline plane of said sidehulls over aft portions than more forward portions of said catamaran-like sidehulls.

101. The boat of claim 100, characterized in that said vertically oriented vented steps are, at least in part, more forward at their upper portions than their lower portions.

102. The boat of claim 100 or 101, characterized in that a chine of the catamaran-like sidehull is disposed, at least partially, further from a vertical centerline plane of said catamaran-like sidehull than the vertically oriented vented steps of said catamaran-like sidehull.

103. A boat having supporting gas cushions disposed in catamaran-like sidehulls with said catamaran-like sidehulls in mechanical communication with connecting hull structure, said supporting gas cushions supplied with pressurized gas by gas pressurization means, and said supporting gas cushions pressurized at sufficient pressure to support a majority of boat weight, characterized by a recess in each catamaran-like sidehull with said recesses at least partially restraining the pressurized gas cushions, each of said catamaran-like sidehulls having inner and outer sidewalls with said outer

THIS SHEET HAS BEEN REPLACED

sidewalls being, on average, substantially lower than the inner sidewalls when the boat is running level, as seen in at least one vertical transverse plane of the boat, and at speeds of more than 25 knots.

104. The boat of claim 103, characterized in that the catamaran-like sidehull's inner sidewalls are, on average, substantially narrower than the catamaran-like sidehull's outer sidewalls.

105. The boat of claim 104, characterized in that catamaran-like sidehull's inner sidewalls are, on average, less than half the width of the catamaran-like sidehull's outer sidewalls.

106. The boat of claim 103, 104 or 105, characterized in that the catamaran-like sidehull's outer sidewalls have lower surfaces that are comprised of angled surfaces forward and more rounded surfaces aft.

107. The boat of any of claims 103 to 106, characterized in that said catamaran-like sidehulls have substantially more narrow bows than aft sections.

108. The boat of any claims 103 to 107, characterized in that at least one of said sidehull's sidewalls, at least in part, diverges going aft from a catamaran-like sidehull's bow toward the stern of the boat.

109. The boat of claim 108, characterized in that the sidehull's sidewall, after diverging, becomes substantially parallel to a vertical centerline plane of the boat.

110. The boat of any of claims 103 to 109, characterized in that the catamaran-like sidehulls are asymmetrical when viewed in a calm seal surface waterline plane of said boat.

111. The boat of any of claims 103 to 110, characterized in that the catamaran-like sidehulls extend substantially more forward than a forward part of the connecting hull structure.

This Sheet Has Been Replaced

THIS SHEET HAS BEEN REPLACED

112. The boat of any of claims 103 to 111, characterized in that a center bow in mechanical communication with said connecting hull structure.

113. The boat of any of claims 103 to 112, characterized by at least one substantially rigid seal member disposed, at least in partially, proximal one of said catamaran-like sidehull's recesses and said substantially rigid seal member's underside, when viewed in at least one vertical transverse plane of the boat, contains surfaces that are angled to horizontal over a majority of said seal member's width.

114. The boat of any claims 103 to 113, characterized by an intermediate movable seal that is at least partially disposed proximal a catamaran-like sidehull recess with said intermediate movable seal in mechanical communication with and movable in relation to the boat.

115. The boat of any of claims 103 to 114, characterized by a second supporting gas cushion in each of the catamaran-like sidehulls, said gas cushions, at least in part, separated by at least one seal member, and wherein the gas pressurization means is capable of supplying gas at different pressures to the separate gas cushions in one of the catamaran-like sidehulls.

116. A boat having supporting gas cushions disposed in catamaran-like sidehulls with said catamaran-like sidehulls in mechanical communication with connecting hull structure, said supporting gas cushions supplied with pressurized gas by gas pressurization means, and said supporting gas cushions pressurized at sufficient pressure to support a majority of boat weight, characterized by a recess in each catamaran-like sidehull with said recesses at least partially restraining the pressurized gas cushions, each of said catamaran-like sidehulls having inner and outer sidewalls with said inner sidewalls being, on average, substantially narrower than the catamaran-like sidehull's outer sidewalls.

THIS SHEET HAS BEEN REPLACED

117. The boat of claim 116, characterized in that the catamaran-like sidehull's inner sidewalls are, on average, less than half the width of the catamaran-like sidehull's outer sidewalls.

118. The boat of claim 116 or 117, characterized in that the catamaran-like sidehull's outer sidewalls are, on average, substantially lower than the inner sidewalls when the boat is running level and at speeds of more than 25 knots.

119. The boat of claims 116, 117 or 118, characterized in that the catamaran-like sidehull's outer sidewalls have lower surfaces that are comprised of angled surfaces forward and more rounded surfaces aft.

120. The boat of any of claims 116 to 119, characterized in that said catamaran-like sidehulls have substantially more narrow bows than aft sections.

121. The boat of any of claims 116 to 120, characterized in that at least one of said sidehull's sidewalls, at least in part, diverges going aft from a catamaran-like sidehull's bow toward the stern of the boat.

122. The boat of claim 121, characterized in that the sidehull's sidewall, after diverging, becomes substantially parallel to a vertical centerline plane of the boat.

123. The boat of any of claims 116 to 122, characterized in that the catamaran-like sidehulls are asymmetrical when viewed in a calm sea surface waterline plane of said boat.

124. The boat of any of claims 116 to 123, characterized in that the catamaran-like sidehulls extend substantially more forward than a forward part of the connecting hull structure.

125. The boat of any of claims 116 to 124, characterized by a center bow in mechanical communication with said connecting hull structure.

126. The boat of any of claims 116 to 125, characterized by at least one substantially rigid seal

THIS SHEET HAS BEEN REPLACED

member disposed, at least partially, proximal one of said catamaran-like sidehull's recesses and said substantially rigid seal member's underside, when viewed in at least one vertical transverse plane of the boat, contains surfaces that are angled to horizontal over a majority of said seal member's width.

127. The boat of any of claims 116 to 126, characterized by an intermediate movable seal that is at least partially disposed proximal a catamaran-like sidehull recess with said intermediate movable seal in mechanical communication with and movable in relation to the boat.

128. The boat of any of claims 116 to 127, characterized by a second supporting gas cushion in each of the catamaran-like sidehulls, said gas cushions, at least in part, separated by at least one seal member, and wherein the gas pressurization means is capable of supplying gas at different pressures to the separate gas cushions in one of the catamaran-like sidehulls.

129. A boat having supporting gas cushions disposed in catamaran-like sidehulls with said catamaran-like sidehulls in mechanical communication with connecting hull structure, said supporting gas cushions supplied with pressurized gas by gas pressurization means, and said supporting gas cushions pressurized at sufficient pressure to support a majority of boat weight, characterized by a recess in each catamaran-like sidehull with said recesses at least partially restraining the pressurized gas cushions, an intermediate movable seal that is at least partially disposed proximal one of the catamaran-like sidehull recesses with said intermediate movable seal in mechanical communication with and movable in relation to the boat, a second supporting gas cushion in the catamaran-like sidehull with the intermediate movable seal, said gas cushions, at least in part, separated by the intermediate movable seal, and wherein

This Sheet Has Been Replaced

THIS SHEET HAS BEEN REPLACED

the gas pressurization means is capable of supplying gas at different pressures to the separate gas cushions in the catamaran-like sidehull.

130. The boat of claim 129, characterized in that the intermediate movable seal is in mechanical communication with a force means that applies a downward force to the intermediate movable seal.

131. The boat of claim 129 or 130, characterized in that the force means is, at least in part, resilient.

132. The boat of claim 129, 130 or 131, characterized in that the intermediate movable seal is comprised of multiple separate elements.

133. The boat of any of claims 129 to 132, characterized in that the intermediate movable seal is attached to the boat by a hinge-like mechanism.

134. The boat of any of claims 129 to 133, characterized in that said catamaran-like sidehulls have substantially more narrow bows than aft sections.

135. The boat of any of claims 129 to 134, characterized by at least one substantially rigid seal member disposed, at least partially, proximal one of said catamaran-like sidehull's recesses and said substantially rigid seal member's underside, when viewed in at least one vertical transverse plane of the boat, contains surfaces that are angled to horizontal over a majority of said seal member's width.

136. A boat having supporting gas cushions disposed in catamaran-like sidehulls with said catamaran-like sidehulls in mechanical communication with connecting hull structure, and with said supporting gas cushions supplied with pressurized gas by gas pressurization means, characterized by a recess in each catamaran-like sidehull with said recesses at least partially restraining the pressurized gas cushions, each of said catamaran-like sidehulls having inner and outer sidewalls, with the recess in at least one of said

This Sheet Has Been Replaced

THIS SHEET HAS BEEN REPLACED

catamaran-like sidehulls, as seen in a horizontal water contacting plane of said boat, enlarging in width over at least a portion of its longitudinal length going aft from its forward portions when said boat is operating at speeds of over 25 knots in a calm sea with its gas cushions pressurized to a sufficient pressure to support a majority of boat weight, and wherein at least one of said recesses is, at least partially, asymmetrical.

137. The boat of claim 136, characterized in that the recess in one of the catamaran-like sidehulls that is enlarging in width then becomes more constant in width over at least a portion of its longitudinal length.

138. The boat of claim 136 or 137, characterized in that at least one of said sidehull's inner and outer sidewalls have outer water contacting surfaces that are, at least in part, asymmetrical to each other.

139. The boat of any of claims 136 to 138, characterized in that an average height of said recess above a lowest portion of a catamaran-like sidehull keel is less than fifty percent of a distance from the lowest portion of the catamaran-like sidehull keel to a wetdeck of said boat.

140. The boat of any of claims 136 to 139, characterized by a center bow in mechanical communication with said connecting hull structure.

141. The boat of any of claims 136 to 140, characterized by at least one substantially rigid seal member disposed, at least partially, proximal one of said catamaran-like sidehull recesses and said substantially rigid seal member's undersides, when viewed in at least one vertical transverse plane of the boat, contains surfaces that are angled to horizontal over a majority of said seal member's width.

142. The boat of claim 141, characterized in that said substantially rigid seal member is, at least partially, asymmetrical.

THIS SHEET HAS BEEN REPLACED

143. The boat of claim 141 or 142, characterized in that said substantially rigid seal member comprises, at least in part, lower sealing surfaces that are substantially more horizontal, as viewed in a vertical transverse plane of the boat, than said substantially rigid seal member's surfaces proximal to and forward of said lower sealing surfaces.

144. The boat of any of claims 136 to 143, characterized by vertically oriented vented steps in a side surface of at least one of said catamaran-like sidehulls.

145. The boat of claim 144, characterized in that at least a part of said side surface of said catamaran-like sidehull in way of said vertically oriented vented steps, as viewed in a horizontal plane of said boat, is narrower over an aft portion than a more forward portion.

146. The boat of any of claims 136 to 145, characterized by a first forward movable seal disposed proximal a forward portion of one of said catamaran-like sidehull recesses where said first forward movable seal is movable in relation to the boat.

147. The boat of any of claims 136 to 146, characterized by an intermediate movable seal that is at least partially disposed proximal a catamaran-like sidehull recess with said intermediate movable seal movable in relation to the boat.

148. The boat of claim 147, characterized in that the intermediate movable seal is in mechanical communication with a force means that applies a downward force to the intermediate movable seal.

149. The boat of claim 148, characterized in that the force means is, at least in part, resilient.

150. The boat of claim 148 or 149, characterized in that the intermediate movable seal is comprised of multiple separate elements.

This Sheet Has Been Replaced

THIS SHEET HAS BEEN REPLACED

151. The boat of any of claims 136 to 150, characterized by a first and a second recess in each of the catamaran-like sidehulls, said first and second recesses, at least in part, separated by recess seal members.

152. The boat of claim 151, characterized in that the gas pressurization means is capable of supplying gas at different pressures to the first and the second recesses.

153. The boat of any of claims 136 to 152, characterized in that said catamaran-like sidehull's said outer sidewalls are, on average, substantially lower than its inner sidewalls when the boat is running level, when viewed in at least one vertical transverse plane of the boat, and at speeds of more than 25 knots.

154. The boat of any of claims 136 to 153, characterized in that said catamaran-like sidehull's inner sidewalls are, on average, substantially narrower than the catamaran-like sidehull's outer sidewalls.

155. The boat of any of claims 136 to 154, characterized in that said catamaran-like sidehull's said outer sidewalls have lower surfaces that are comprised of angled surfaces forward and more rounded surfaces aft.

This Sheet Has Been Replaced

THIS SHEET HAS BEEN REPLACED

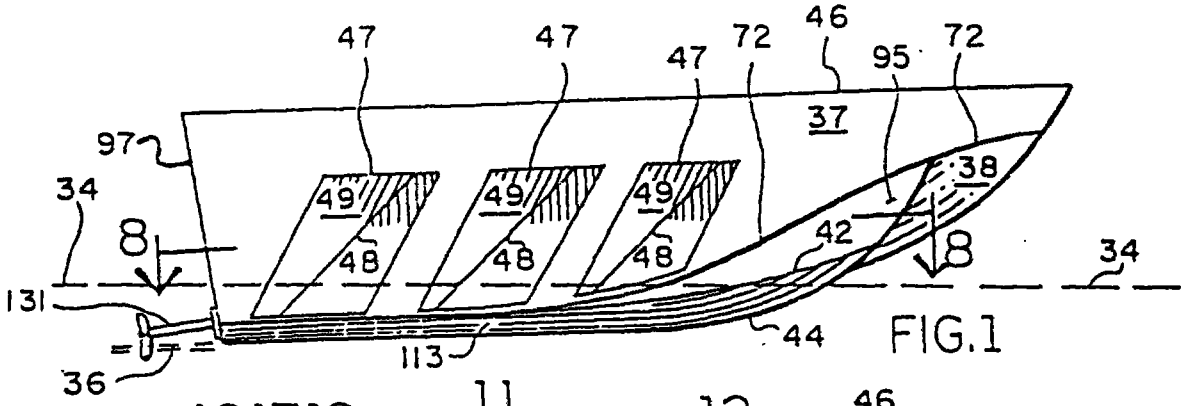

FIG.1

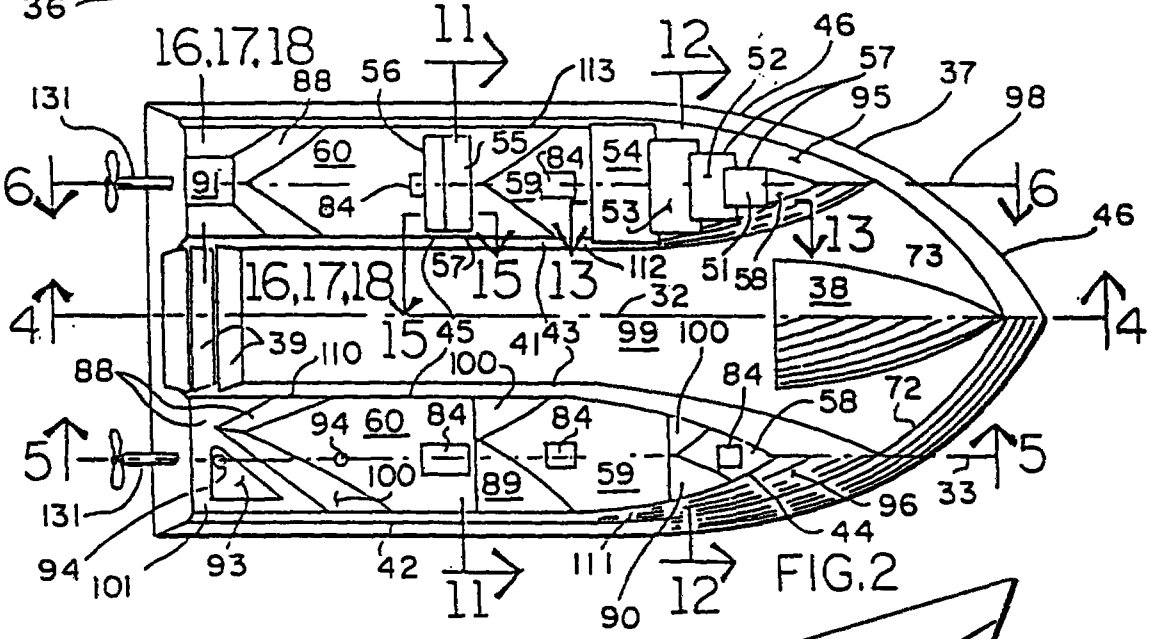

FIG.2

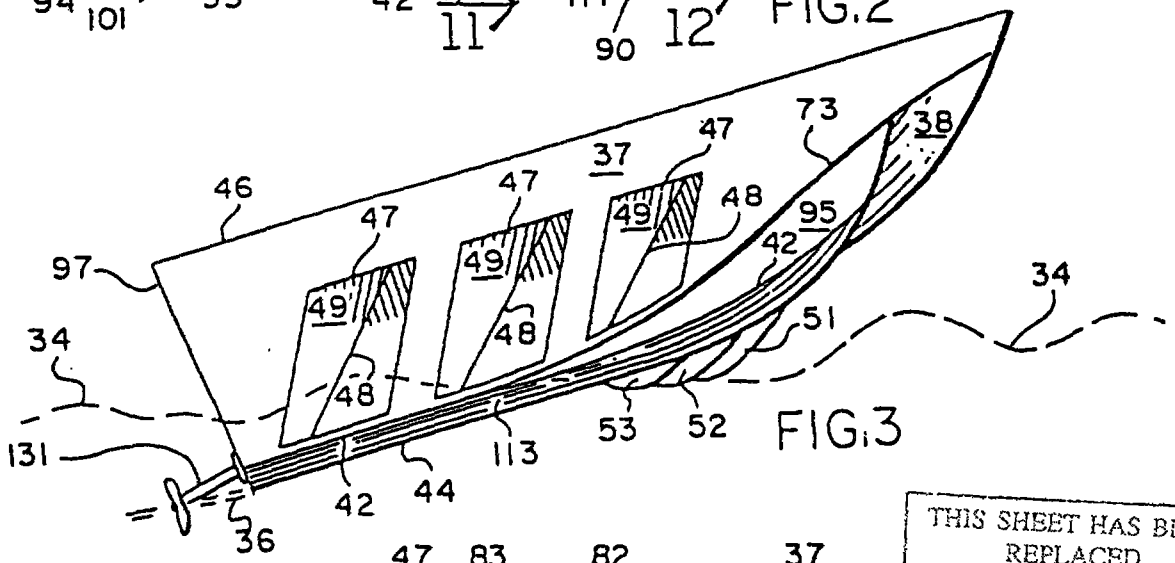

FIG.3

THIS SHEET HAS BEEN REPLACED

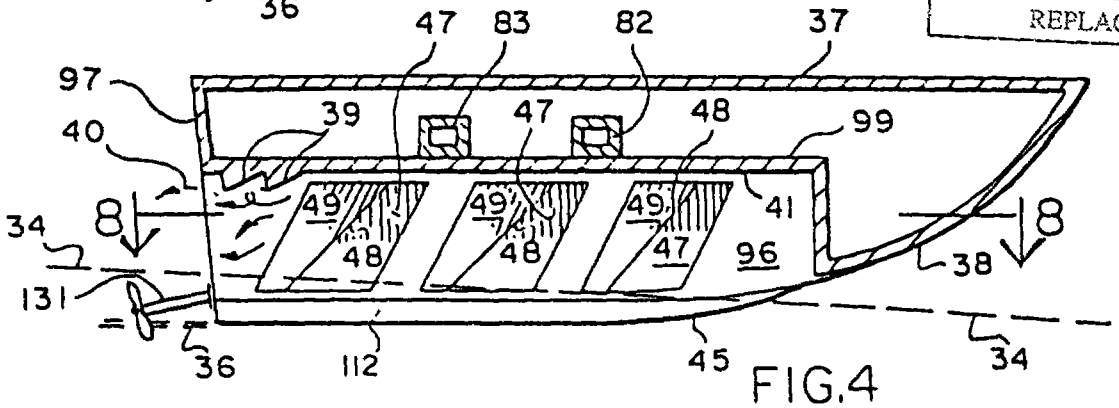

FIG.4

This Sheet Has Been Replaced

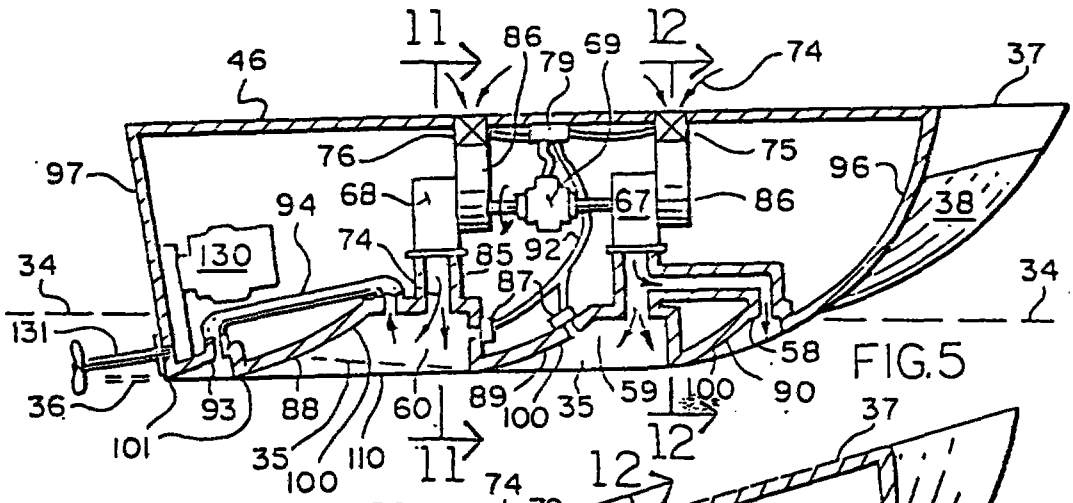

FIG.5

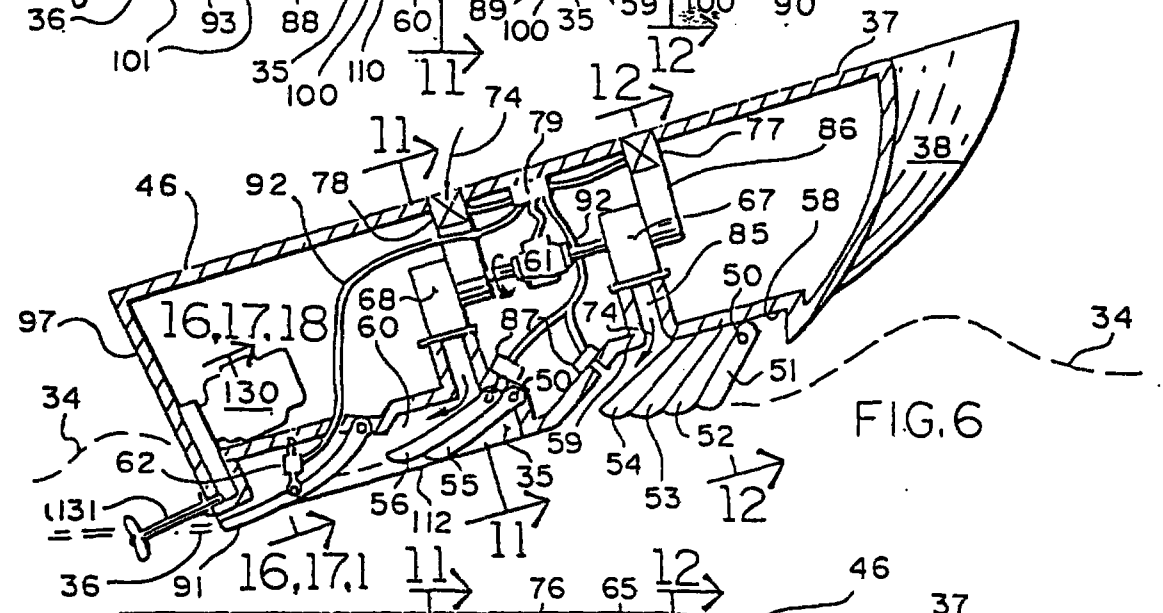

FIG.6

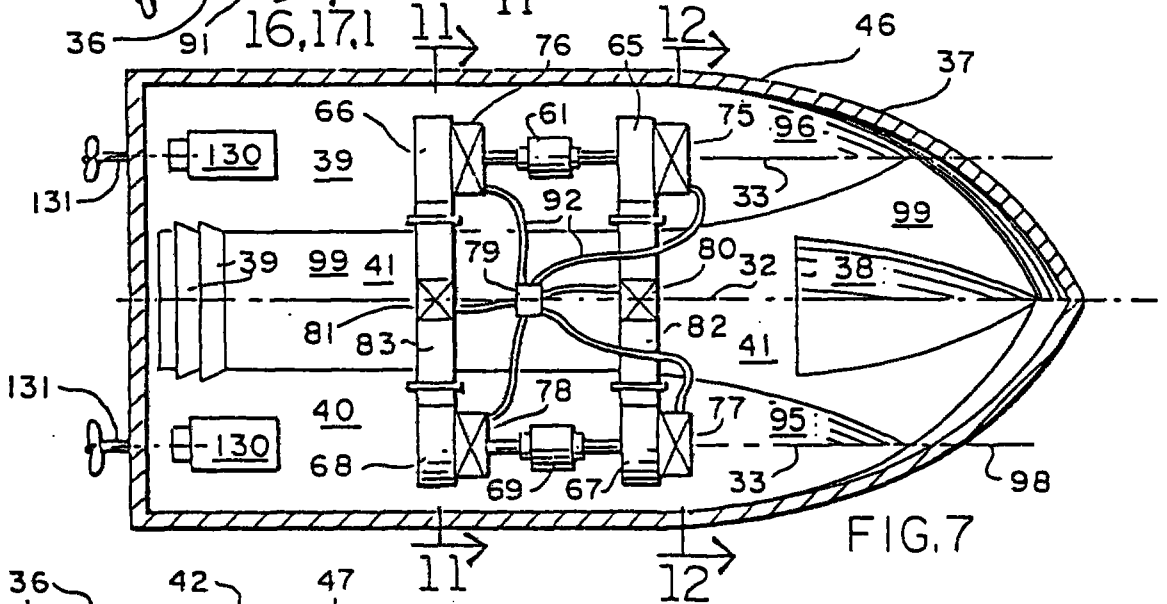

FIG.7

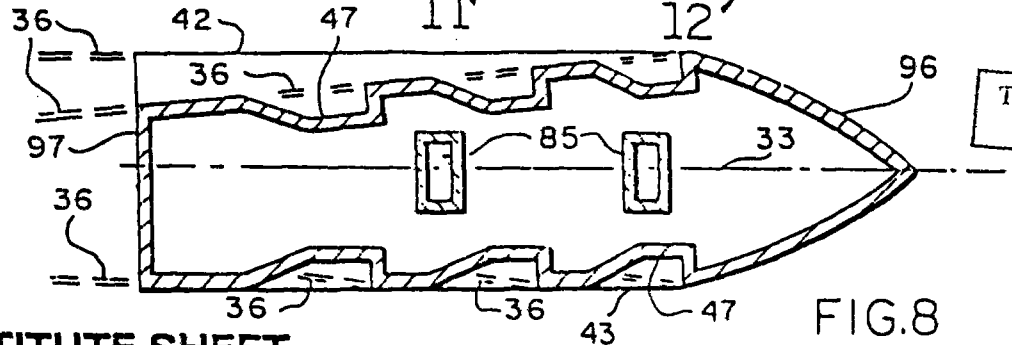

FIG.8

THIS SHEET HAS BEEN REPLACED

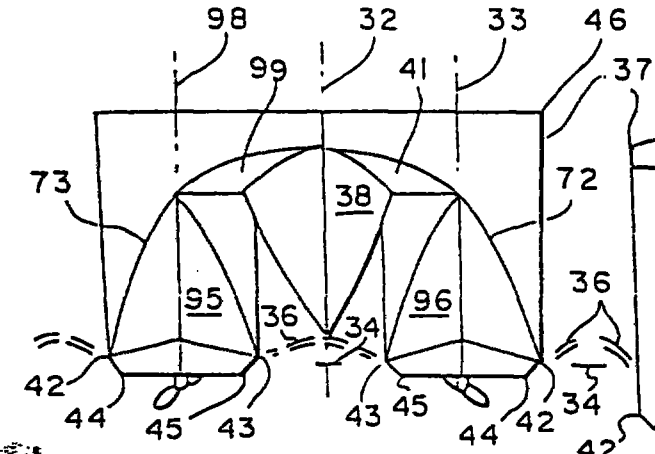

FIG.9

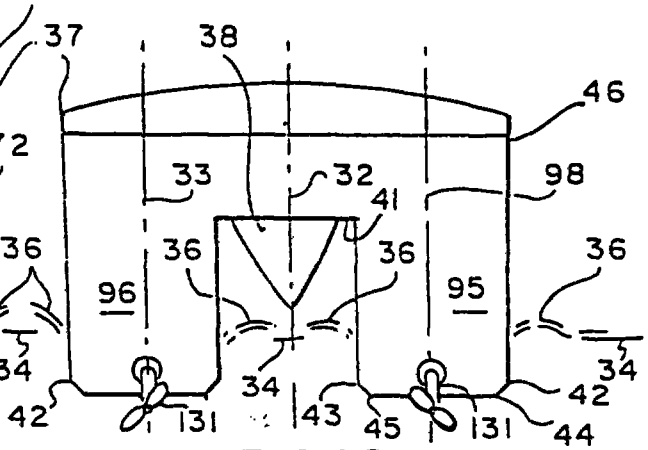

FIG.10

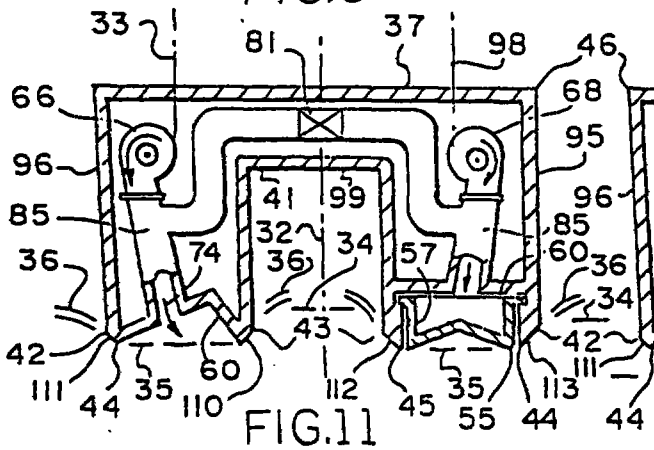

FIG.11

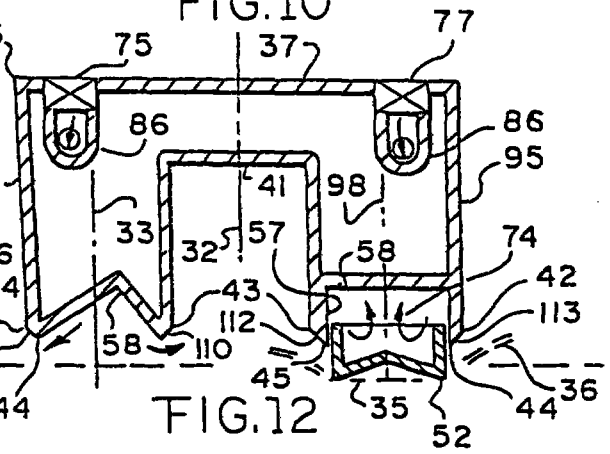

FIG.12

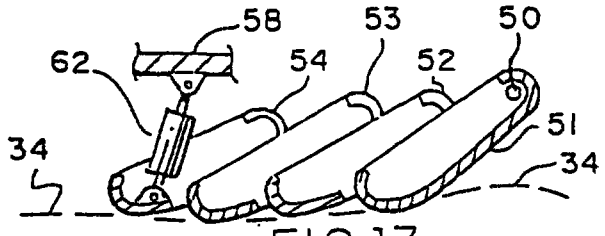

FIG.13

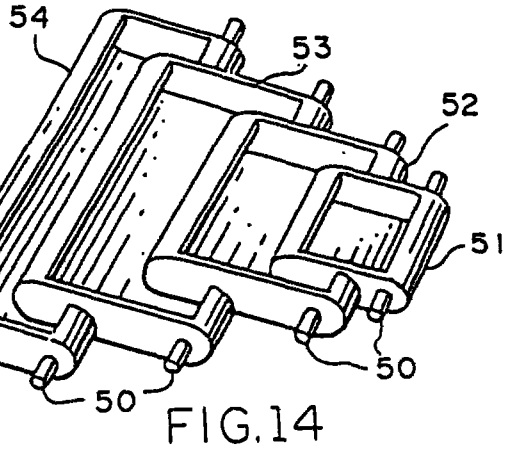

FIG.14

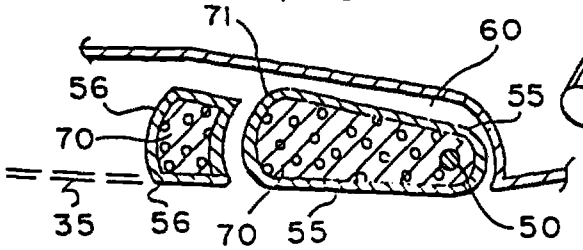

FIG.15

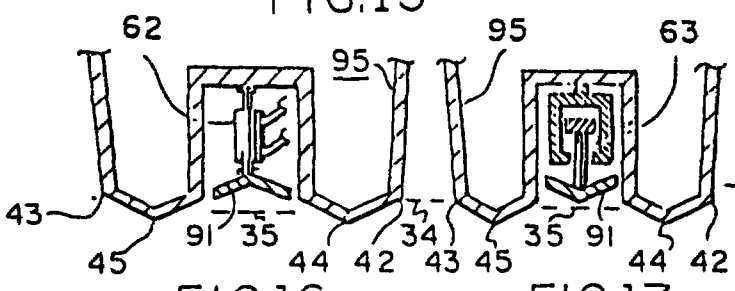

FIG.16 FIG.17

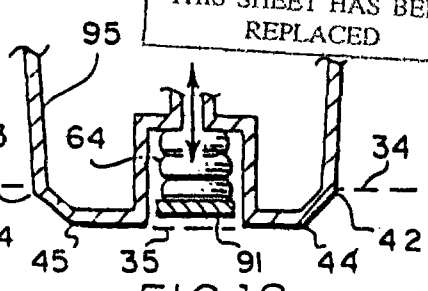

FIG.18

THIS SHEET HAS BEEN REPLACED

This Sheet Has Been Replaced

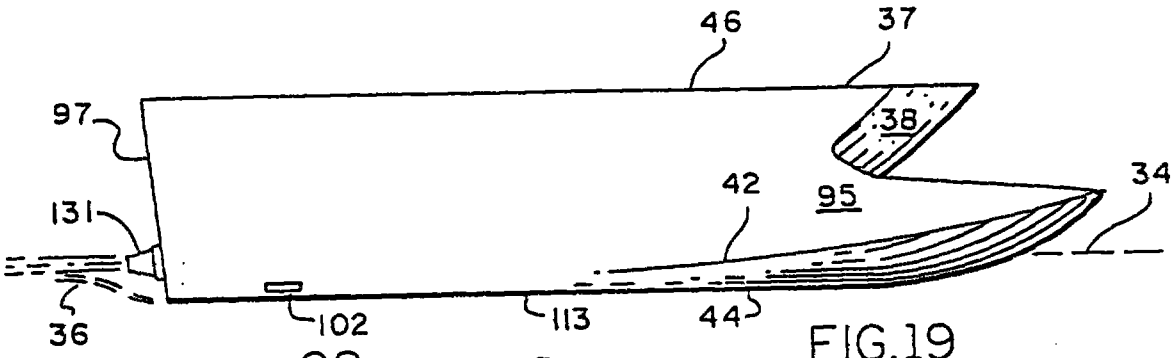

FIG.19

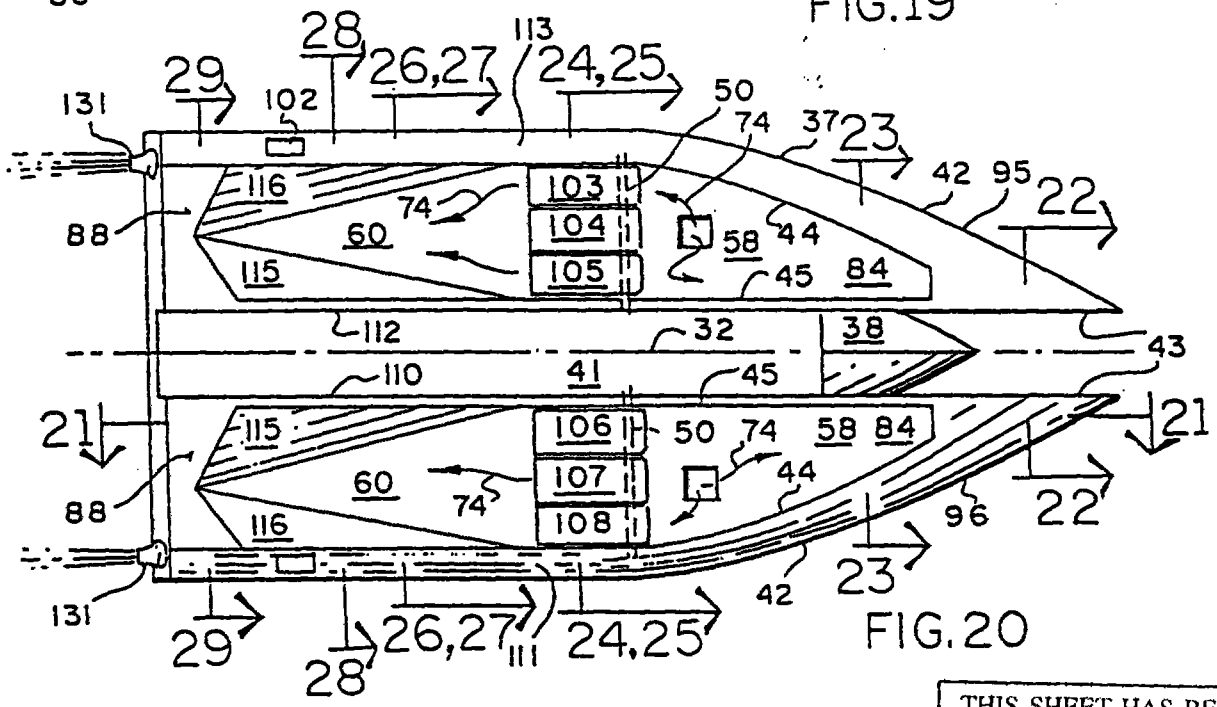

FIG.20

THIS SHEET HAS BEEN REPLACED

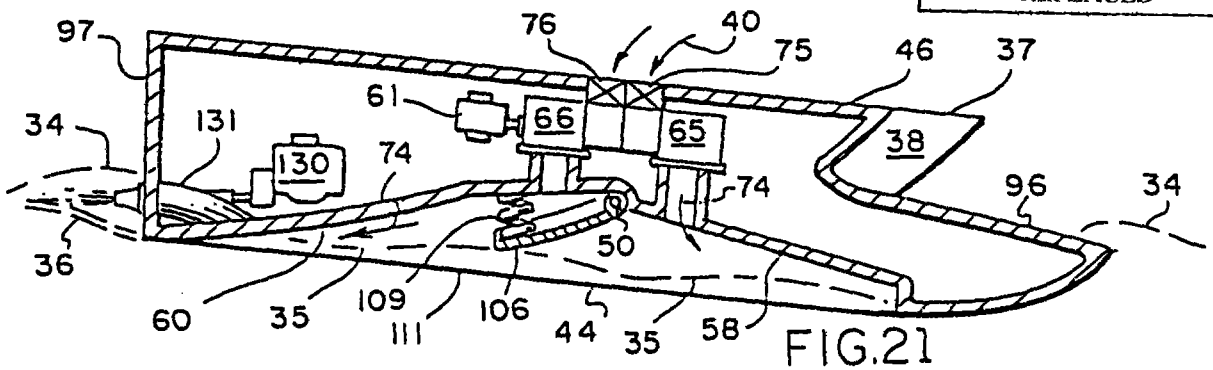

FIG.21

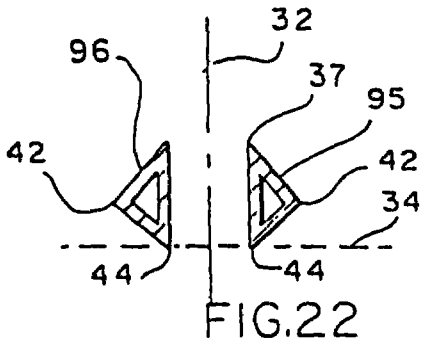

FIG.22

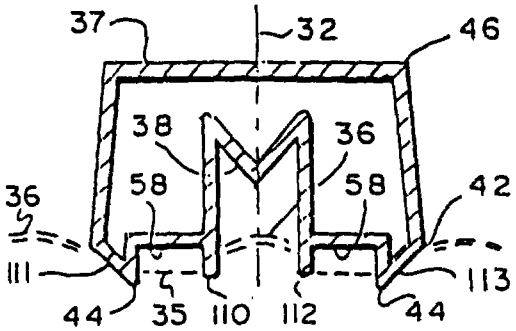

FIG.23

This Sheet Has Been Replaced

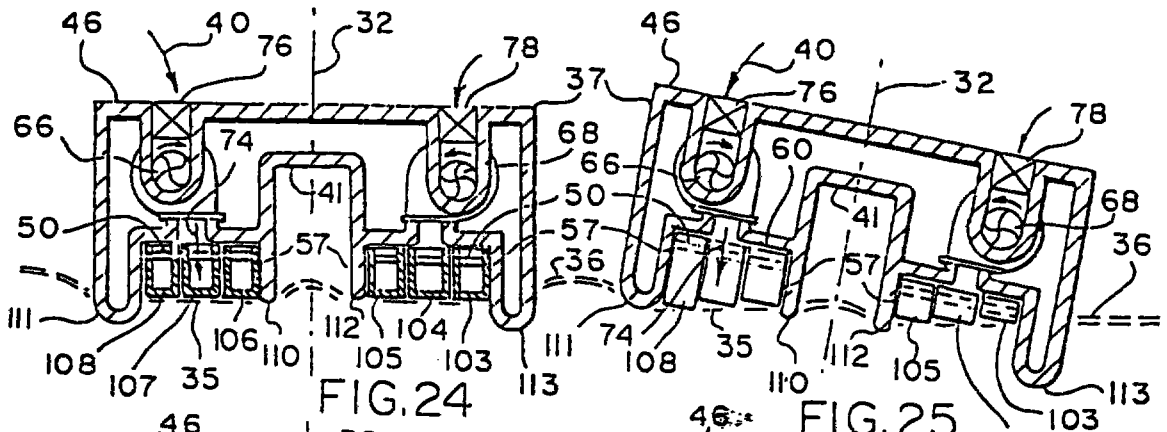

FIG.24

FIG.25

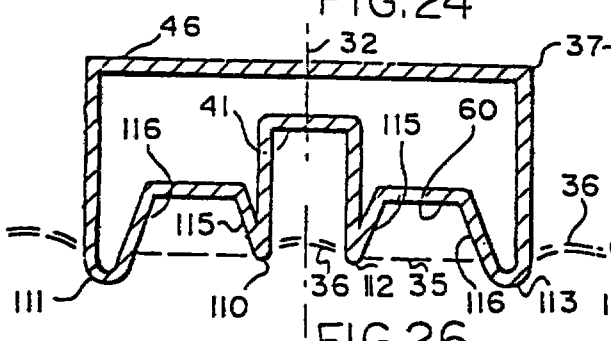

FIG.26

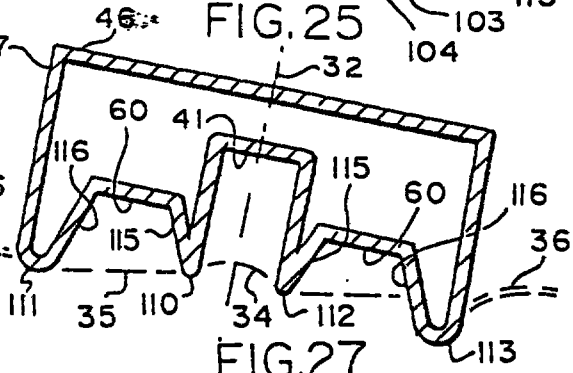

FIG.27

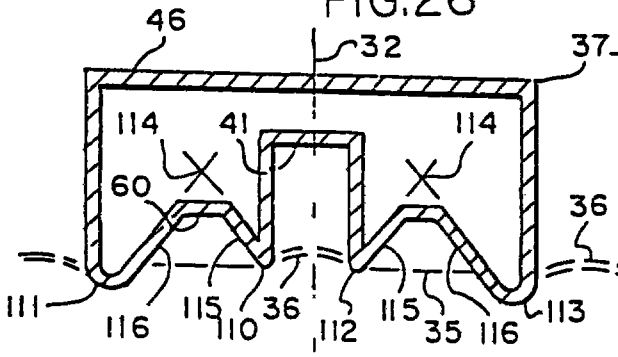

FIG.28

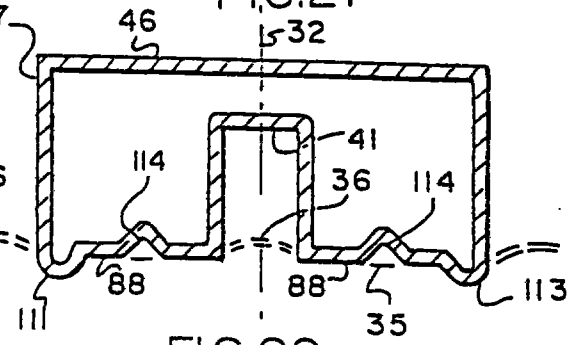

FIG.29

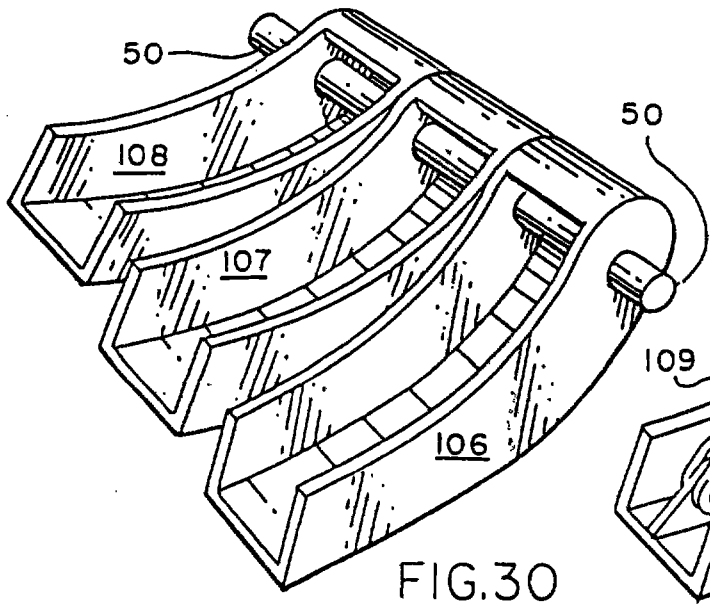

FIG.30

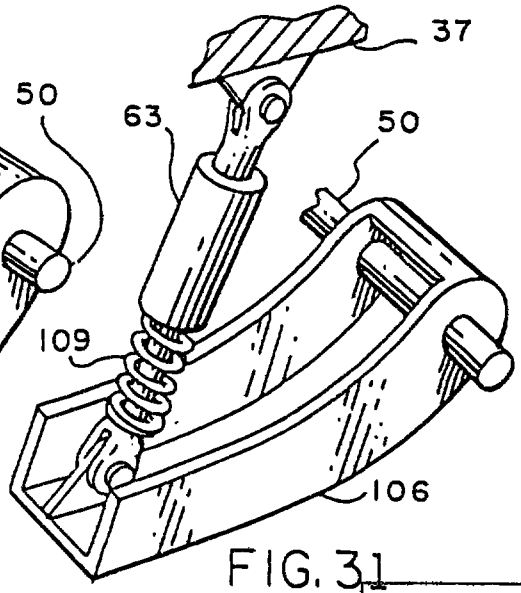

FIG.31

THIS SHEET HAS BEEN REPLACED

9600052-2

MULTIPLE HULL AIR RIDE BOAT

This invention relates to the field of marine vessels made more efficient in operation by the use of a supporting pressurized gas cushion disposed in a recess in the underside of the vessel's hull.

This invention is a further improvement to applicant's earlier inventions in this field that are generally entitled "Air Ride Boat Hulls". All of these inventions require the introduction of pressurized gas into a recess in the underside of a boat hull to increase operating speeds and load carrying capabilities and improve stability. The improvements are the result of the pressurized gas cushion supporting some eighty to ninety percent of boat weight in most cases. The efficiency improvements at high speed are mainly the result of a reduction, normally by several orders of magnitude, of wetted area drag compared to a more conventional hull form.

The instant invention offers significant advances over applicant's earlier patents from the standpoint of use of multiple, primarily parallel and widely spaced, hulls. The effect of this is to change and improve vessel stability and resistance and performance characteristics, in many instances, compared to a more generic air cushion supported marine craft such as the Surface Effect Ship (SES). The prior art Surface Effect Ship (SES) has thin parallel sidehulls that are joined transversely fore and aft by full span flexible seals--the space thus formed is pressurized with air to provide a large lifting force. As such, it can be seen that the ship has a single rather wide rectangular footprint on the water's surface.

The U.S. Navy funded some studies in the early eighties of a boat that utilized catamaran-like sidehulls with each sidehull a generic SES. As stated before, the generic SES is a pressurized air cushion vehicle that incorporates full span flexible seals fore and aft (bow and stern) between parallel sidehulls. In the Navy's concept, the twin generic SES sidehulls were separated by

REPLACEMENT SHEET
05 MAR 1997

and connected to a cross deck or wetdeck structure. Not only were their sidehulls parallel, but each sidehull had sides that were thin and plate-like and ran completely up to the wetdeck. Outward extensions of the wetdeck actually formed the upper surface of the pressurized gas recesses. This can be seen from Figure 2, page 302, from an article titled: "The Surface Effect Catamaran--Progress in Concept Assessment" by F.W. Wilson, et al, pages 301-311, Naval Engineer's Journal, May 1983, published by the Americana Society of Naval Engineers, Inc., 1452 Duke Street, Alexandria, Virginia 22314. That article gives a detailed summary of the Navy's catamaran sidehull air cushion vehicle project. For purposes of simplification, the Navy's project will be referred to as SECAT (their acronym made from Surface Effect CATamaran) in the remainder of this document.

SECAT's idea was that each sidehull's flexible bow seals would give to waves and they could pass through the sidehull recess without molestation unless they were of sufficient height to contact the recess wetdeck. While the SECAT's analytical and model studies were encouraging there appears to have been no follow-on efforts on actual full size or prototype vessels. SECAT also requires extra structural weight for the long thin cantilevered sidehull plates and would have very poor off-cushion performance. It would appear that concern for the aforementioned plus the very high, narrow, and high maintenance flexible seals in each sidehull recess with the related tremendous increase in wetted area resistance in high seas, due to the extra vertical movement of the flexible seals on the inboard sides of each sidehull and resulting increases in wetted area, compared to a generic single chamber SES, probably discouraged further efforts.

U.S. Patent No. 1,307,135 uses dual gas cushion floats with the floats supplied with exhaust gas from an engine. The main intent in this publication is to make a

REPLACEMENT SHEET
05 MAR 1997

device to aid in performance of a seaplane, or hydroaeroplane as he calls it, when the seaplane is either waterborne or airborne as can be realized upon examination of lines 96-106, page 2, of the patent which states: "Furthermore, it will be appreciated, that when the hydroaeroplane is in flight through the air, a corresponding entraining action will ensue between the aquafoils and supporting pressures, supplemented of course by the exhaust pressures, and the resulting diminution in frictional resistance, in this instance, will be measurable because of the relatively lighter density of the elastic fluid which is thus introduced between the aquafoils and the air pressure." This is further shown by lines 22-24, page 2, of U.S. Patent No. 1,307,135 which states: "The float is shown as supporting a fuselage 8 by struts 9, and aerofoils representing a supporting unit are indicated by 10." The supporting unit 10 is actually the wing of an aircraft.

U.S. Patent 4,393,802 discloses a monohull with a center pressurized air cushion and with dual outer recess that are open at the aft end with no aft sealing means to restrain pressure in a side gas cushion. U.S. Patent Nos. 3,191,572; 3,606,857, and 4,031,841 offer variations of air lubricated multihulls. However, all have air layers that cannot be sealed at their aft ends since they do not have an aft air cushion seal. They cannot therefore seal air pressure in a cavity or recess under a sidehull. They simply use ram or blower pressurized air to lubricate the underside of the sidehulls and/or as a means to accelerate water out an open aft end of the air lubricated underside of a sidehull. Because they have no means to restrain gas cushion pressure in sidehull recesses and therefore cannot support a majority of craft weight with pressurized gas cushions.

The object of the instant invention is to offer the advantages of previous Air Ride boat hull inventions

REPLACEMENT SHEET
05 MAR 1997

ccupled with further improvements in stability and performance.

The present invention provides a boat having supporting gas cushions disposed in catamaran-like sidehulls with said catamaran-like sidehulls in mechanical communication with connecting hull structure, and with said supporting gas cushions supplied with pressurized gas by gas pressurization means, characterized by a recess in each catamaran-like sidehull with said recesses at least partially restraining the pressurized gas cushions, each of said catamaran-like sidehulls have inner and outer sidewalls, with the recess in at least one of said catamaran-like sidehulls, as seen in a horizontal water contacting plane of said boat, enlarging in width over at least a portion of its longitudinal length going aft from its forward portions when said boat is operating at speeds of over 25 knots in a calm sea with its gas cushions pressurized to a sufficient pressure to support a majority of boat weight.

Preferably, the sidehulls can be substantially boat shaped with an essentially pointed bow shape when viewed in a plane that intersects a calm sea waterline when the boat is underway at high speed. The sidehulls can be either symmetrical or asymmetrical. Further, either one or both of a sidehull's sidewall's water contacting surfaces may diverge to accomplish a widening of the air cushion going from forward to aft. A sidehull's sidewall water contacting surface may diverge outward from forward and become parallel over at least a part of its after portions. A sidehull's outer sidewall's water contacting surfaces may be wider than the sidehull's inner sidewall's water contacting surfaces. Further, water contacting surfaces of a sidehull's sidewall may preferably be more hard chine or flatter forward going to more rounded shapes aft. Further, a sidehull inner sidewall's lower surfaces may be, on average, higher in

REPLACEMENT SHEET
05 MAR 1997

elevation than the sidehull outer sidewall's lower surfaces. Further, the sidehulls may extend forwardly of the main hull structure. Further, a center bow may be utilized where such a center bow adds to vessel fore and aft stability and reduces wetdeck wetting especially when the vessel is operating at high speeds in heavy seas. The center bow may extend forwardly of the sidehulls. Further, the center bow may be made with different shapes such as the preferred deep-V, inverted-V, or others. Further, there may be provided substantially vertical steps that reduce the amount of vertical surface wetted sidehull area when operating in rough seas. Ambient air is fed downward into the vertical steps. The vertical steps may be slanted so that water is directed not only outward from the sidehull but also downward thereby adding lift to the sidehull. The shape of a sidehull may be made wider forward and narrower aft in way of the vertical steps thereby reducing the rearward force of spray impinging on the sidehull steps. The sidehull may be full width below the narrowing stepped portion thereby giving a full width gas cushion and hence a full width lifting surface while still offering the advantage of tapered sidehull sides in way of the vertically oriented vented steps. There may be provided an air flow turbulence generator on the underside of the wetdeck to thereby restrict air flow under the wetdeck and as a result cause a buildup of static air pressure lifting force under the wetdeck. Movable bow and/or recess seals may be provided that are movable in relation to the sidehulls. A movable bow seal that may be utilized in conjunction with a pointed bow shape forward of the movable bow seal thus allowing for a simple fixed wave piercing bow with its related low cost and attractive appearance. The movable bow seal concept could include a series of seals or elements with each being able to follow the water surface thus creating an efficient gas seal. The bow seals are

REPLACEMENT SHEET
05 MAR 1997

preferably able to seal themselves from the side and also following seals help in the sealing of seals preceding them. Preferably the movable bow seals have trailing surfaces that curve or angle to match movement of a following seal thus resulting in good sealing of pressurized gas in the gas cushion. The movable seals are preferably made of structurally strong materials which is possible since it is not necessary that such movable seals utilize flexible materials for construction. An advantage of the optional movable seals is that the movable seals can be attached by hinges or other simple means to the hull. Preferably the optional movable bow seals are made with shaped lower surfaces, such as a preferred shape inverted-V, to provide good water surface tracking and reduced wave impact loadings. Secondary bow shaped members can be interspersed in the gas cushion recess to assist in providing hull stability and also help break up waves under the hull when operating in rough seas. The secondary bow shaped members may be shaped like inverted-V's with their lower portions located proximal the sidehull's sides thus adding to hull stability in roll as well as reducing inside of recess wetting downstream of the inverted-V seals. A downwardly force biased movable seal may be provided positioned between fore and aft sidehull pressurized gas cushions. The downwardly force biased movable seal may be made up of multiple water contacting ski-like elements. The secondary bow shaped member inside of the recess may be biased, or lower, to the outboard side than the inboard side of the recess thereby adding further to roll stability of the boat. The structurally sound and reliable fixed stern seal may optionally incorporate movable stern seal element(s) to aid in gas sealing, controlling of vessel trim, and/or directing water flow to a propulsor that is positioned aft of the movable stern seal element. The fixed stern seal may have a lower surface that is somewhat more flat than a

REPLACEMENT SHEET
05 MAR 1997

forward portion of the fixed stern seal thus providing a high efficiency planing surface for the aft end of the boat to ride on. The stern seal may have a lower surface that has a low wave impact and is at least partial V-shape when seen in operation from a bottom plan or fisheye view. An inset may be provided into the stern seal to reduce the high resistance wetted area of the stern seal. Pressurized gas may be supplied to the inset in the stern seal. The fixed structural portion of the stern seal may extend, in mathematical summation of its parts, across a majority of the width of the recess. Fixed structural portions of the stern seal, as seen in a vertical transverse plane of the hull, may be angled to horizontal over a majority of their width to reduce wave impact forces in rough seas. Gas pressure control means can be incorporated that can regulate gas pressure in at least portions of the recesses. Regulation of gas pressure in such recess portions can help in maintaining best trim of the vessel in heavy seas. A controller may be used to control operation of gas pressure control means that in turn controls gas pressures in the recesses. The just mentioned controller may receive as inputs hull orientation and values of pressures in the hull recesses.

In accordance with the preferred embodiment of the invention, the widely spaced long and thin air cushion hulls, in combination, have a much reduced low or "hump" speed resistance characteristic than does a single wide air cushion hull. However, at very high speeds a large wide air cushion hull with its single cushion generally has less resistance. That is due in part to the added wetted area resistance of the necessary extra sidewalls on the inboard sides of the separated catamaran-like sidehulls. Some effort has been made in the instant invention to reduce that wetted area effect by use of new concept vertically oriented steps that are preferably vented by surface air supplied downward along the vertical

REPLACEMENT SHEET
05 MAR 1997

steps. It is preferable to have the sidewalls taper inward going aft in way of the vertical steps to reduce the drag force due to the impingement of water spray on the steps.

The instant invention accomplishes the preceding, in its optimum configuration, while using essentially boat shaped sidehulls that, in their preferred embodiment, have a generally pointed bow and truncated stern shape as seen in a dynamic waterline plane where the water contacts the sidehull. At least one of the sidehull keels diverges outward aft of the bow and then become substantially parallel over most of its after length. The sidehulls are symmetrical in the preferred embodiment; however, asymmetrical sidehulls can be used. Use of fixed and/or movable seals can also be used in or proximal to the sidehull pressurized gas recesses.

Another embodiment of the instant invention uses narrower inboard sidewalls on catamaran-like air cushion sidehulls than outboard sidewalls. The reason for this is that the majority of hull transverse stability moment forces are provided by the outboard sidewalls due to their much greater distance from the vertical centerline plane of the hull. Therefore, it is of limited value from a transverse stability standpoint to have a wide inboard sidewall and use of narrower inboard sidewalls yields less wetted area hull resistance.

Further to reducing hull resistance, my studies have shown that use of a harder or more defined chine forward going a more rounded sidewall shape aft yields advantages. The harder chine forward gives better stability in a seaway while the more rounded sidewall shape aft provides less resistance. The rounded sidewall shape aft is generally in the form of circular arc shapes.

It is also preferred that the lower surfaces of the inboard sidewalls terminate higher in elevation than the outboard sidewalls lower surfaces. The effect of this

REPLACEMENT SHEET
05 MAR 1997

is to reduce hull resistance since less of the inboard sidewalls are in the water. This is possible because the distance of the inboard sidehull from the vertical centerline plane of the hull is less and therefore it sees less vertical movement during hull rolling.

As stated, the sidehulls, in their preferred embodiment, have substantially pointed bows that allow the use of shallow recesses since the pointed bows divide an oncoming wave and direct it to either side of a sidehull rather than allowing its full passage into a sidehull's recess. The sidehulls have rather boat shaped pointed bows and truncated sterns, as seen in outline in a horizontal waterline cross section of a sidehull, in its preferred embodiment. This compares to the SECAT where each of SECAT's sidehulls have a rectangular footprint on the water surface as can be seen in Figure 11, page 306, of the preceding referenced SECAT article. Further, the preferred embodiment having vertical steps in the sidehulls will greatly limit the increase of wetted area resistance on the outside or sea surface sides of the sidehulls when operating in heavy seas. Neither of the just mentioned advantages reduce performance and will, indeed, provide for at least reasonably good conventional catamaran-like hull performance with the blower system off. That is because the relatively shallow gas cushions and optional recess seal members make for much more hull like undersurfaces than did the SECAT's twin air cushion design. That is because the SECAT's design used full, to the wetdeck, depth recesses with full depth flexible seals fore and aft. That design used parallel thin sideboards, that extended all the way to the wetdeck, to form each side of the catamaran sidehulls. It can easily be seen that the SECAT's design must have functioned much like a lilypad with the blowers off.

The use of seals to divide portions of the recess also offer advantages. They reduce the amount of recess

REPLACEMENT SHEET
05 MAR 1997

surface wetting when operating in heavy seas. This is particularly so when the preferred inverted-V seal design is utilized since such a shape has its lowest point at the sidehull sides thereby directing waves away from recess vertical surfaces downstream of the inverted-V seals. The recess seals also provide fore and aft smaller recesses that can be pressurized differently to help trim the vessel. The differential pressurization is accomplished by use of pressure control valves that are directed by an on-board controller that senses hull orientation and pressures in the recesses.

In the case of use of the separated fore and aft gas cushions in the sidehulls, my studies have shown that a movable seal, that is force biased downwardly by a spring or other force generating member in its preferred configuration, that is positioned between the gas cushions is desirable. This provides for an efficient water following movable seal. The use of the downward force on the seal provides for such instance where the forward gas cushion is pressurized at greater pressure than the aft gas cushion. The reason for need of the movable seal is that the forward and aft ends of the sidehulls follow the wave patterns while the more middle sections of the sidehulls can see rising and lowering wave patterns inside the air cushions.

In the preferred embodiment, the center bow disposed inward, and generally in part forward, of the sidehulls offers significant additional advantages. The first is in appearance where a rather yacht-like pointed bow, as seen from topside or in profile, can be realized if the center bow extends forwardly. The second is in providing good ride qualities in rough seas in that the center bow helps to prevent bow pitch down of the boat in heavy seas. The third is that the center bow helps prevent wetdeck slamming when running in very heavy seas as it tends to lift the forward part of the boat as a

REPLACEMENT SHEET
05 MAR 1997

large wave is encountered and then directs the wave away from the wetdeck.

In the drawings:

Figure 1 presents a right side elevational view of a boat in accordance with the present invention.

Figure 2 is a bottom plan view of the boat of Figure 1;

Figure 3 is a right side elevational view of the boat of Figure 1 when the boat is operating in heavy seas with its bow pitched upward;

Figure 4 is a centerline cross sectional view taken on line 4-4 of Figure 2;

Figure 5 is a cross sectional view taken on line 5-5 of Figure 2;

Figure 6 is a cross sectional view taken on line 6-6 of Figure 2;

Figure 7 is a top plan view, with the deck removed, of the boat of Figure 1;

Figure 8 is a cross sectional view taken on line 8-8 of Figure 4;

Figure 9 is a front elevational view of the boat of Figure 1;

Figure 10 is a rear elevational view of the boat of Figure 1;

Figure 11 is a cross sectional view taken on line 11-11 of Figures 2, 5, 6 and 7;

Figure 12 is a cross sectional view taken on line 12-12 of Figures 2, 5, 6, and 7;

Figure 13 is a cross sectional view taken on line 13-13 of Figure 2;

Figure 14 is a perspective view of the seals shown in Figure 13;

Figure 15 is a cross sectional view of the intermediate movable seals of the starboard sidehull, as taken through line 15-15 of Figure 2;

Figure 16 is a cross sectional view taken on line 16-16 of Figure 2;

REPLACEMENT SHEET

05 MAR 1997

Figure 17 is a cross sectional view taken on line 17-17 of Figure 2;

Figure 18 is a cross sectional view taken on line 18-18 of Figure 2;

Figure 19 is a right side elevational view of another embodiment of the boat having severely elongated forwardly extending sidehull bows;

Figure 20 is a bottom plan view of the boat of Figure 19;

Figure 21 presents a cross sectional view taken on line 21-21 of Figure 20;

Figure 22 is a transverse cross sectional view taken on line 22-22 of Figure 20;

Figure 23 is a transverse cross sectional view taken on line 23-23 of Figure 20;

Figure 24 is a transverse cross sectional view taken on line 24-24 of Figure 20;

Figure 25 is a transverse cross sectional view taken on line 25-25 of Figure 20;

Figure 26 is a transverse cross sectional view taken on line 26-26 of Figure 20;

Figure 27 is a transverse cross sectional view taken on line 26-26 of Figure 20.

Figure 28 is a transverse cross sectional view taken on line 28-28 of Figure 20;

Figure 29 is a transverse cross sectional view taken on line 29-29 of Figure 20;

Figure 30 is a perspective view of some typical intermediate movable seal elements and a seal hinge pin; and

Figure 31 is a similar view showing an intermediate seal element and actuator.

With reference to the drawings and in particular to Figure 1, Figure 1 shows a boat 37 that is running in a calm sea as shown by sea surface waterline 34. Shown is the starboard sidehull 95, starboard sidehull outer

REPLACEMENT SHEET
05 MAR 1997

sidewall 113, sidehull chine 42, main hull upper chine 72, main hull center bow 38, deck line 46, transom 97, propulsor 131 (in this case a surface propeller drive), adjacent to the hull water surface 36, and vertically oriented air vented step compartments 47. The vertically oriented ventilated step compartments 47 include an angled step line 48 and a tapered vertically oriented step 49 in these preferred embodiments. The vertically oriented ventilated steps 47 reduce the wetted area of the starboard sidehull 95 as can be seen by examination of the sea surface waterline 34. This reduction of wetted surface area can be even more pronounced when operating in rough seas.

Figure 2 presents a bottom plan view of a boat 37 that shows the connecting hull structure 99 whose underside is the wetdeck 41 which includes an air flow turbulence generator 39. The connecting hull structure 99 is normally in mechanical communication with the center bow 38, port sidehull 96 and starboard sidehull 95 in the preferred embodiment of the instant invention. The wetdeck 41 is also bounded by the transom 97 and main hull upper chines 72 and 73 in this instance. The center bow is preferably centered around the boat's vertical centerline plane 32; however, more than one center bow 38 can be used and the center bow 38 need not be centered around the boat's vertical centerline plane 32. The boat 37 has a vertical centerline plane 32, a port sidehull vertical centerline plane 33, and a starboard sidehull vertical centerline plane 98. Also shown are the deck line 46, propulsors 131, sidehull outer chines 42 and inner chines 43, sidehull outer keels 44 and inner keels 45, port sidehull inner sidewall 110, port sidehull outer sidewall 111, starboard sidehull inner sidewall 112, starboard sidehull outer sidewall 113, pressurized gas supply ducts 84, and sidehull forward recesses 58, intermediate recesses 59, and aft recesses 60. It is to

REPLACEMENT SHEET
05 MAR 1997

be noted that any number of recesses , from one to many, can be incorporated into either sidehull 95 and 96 and that other hull members, such as the center hull 38, can also include pressurized gas recesses if desired.

Figure 2 also shows fixed inverted-V shaped recess seals in the port sidehull and a combination of movable, relative to the boat hull, seals and fixed seals in the starboard sidehull. It would normally be preferred to utilize the same seal configurations in both sidehulls; however, a combination such as is shown would be quite workable. The fixed seals are forward seal 90, intermediate seal 89, and aft seal 88. Angled seal portions 100, as seen in a vertical transverse plane of the boat, compare to more horizontal lower seal portions 101. The use of more angled surfaces 100 forward gives best ride qualities in rough seas while the more horizontal lower surfaces 101 give best hydrodynamic efficiencies so the combination is warranted. The port aft seal 88 includes an inset 93 that is supplied with pressurized gas from a recess 60 or other source by conduit 94. Supplying the inset 93 with pressurized gas makes a gas layer in the inset 93 and thereby reduces port aft seal 88 wetted area and hence wetted area resistance.

The optional sealing means in the starboard sidehull 95 are forward movable seals 51, 52, 53, and 54, intermediate movable seals 55 and 56, and aft movable seal 91. Substantially vertical, or parallel, sidehull inside surfaces 57 are normally used next to the movable seals and sidehull inside surfaces can diverge aft of such parallel sidehull inside surfaces 57 proximal the movable seals 51, 52, 53, 54, 55, and/or 56. Further descriptions of functions of these movable seals is given in following paragraphs; however, their primary intent is to provide better gas sealing than is possible with the fixed seals shown in the port sidehull.

The starboard sidehull 95 may be truncated forward and not have a pointed bow as is shown. An

REPLACEMENT SHEET
05 MAR 1997

optional variation of the instant invention is that a bow of a sidehull could be partially truncated so that there is little or no pointed center bow of a sidehull forward of the movable seal 51.

Figure 3 shows a starboard side profile view of the boat 37 when operating in heavy seas as seen by sea surface waterline 34. The center bow 38 is pitched up in this instance. It can be seen that the starboard sidehull 95 forward movable seals 51, 52, and 53 have extended downward below a keel line 44 to aid in sealing of pressurized gas.

Figure 4 shows the elevation of the wetdeck 41 aft of the center bow 38 where the center bow helps prevent wave slamming into the wetdeck 41. The wetdeck 41 is actually the underside of the connecting hull structure 99. Also shown is the air flow turbulence generator 39 and its effect on air flow, as shown by air flow arrows 40. The generated turbulence reduces air flow area and thereby increases air static pressure forward of the air flow turbulence generator 39 thus creating an added lift force acting on the wetdeck 41. The effect of this, of course, is to increase overall efficiency of the boat 37. Further shown in Figure 4 are gas pressurization cross flow ducting forward 82 and aft 83.

Figure 5 shows workings of the port sidehull 96 gas pressurization system and other features. The gas pressurization system shown here includes a gas pressurization device or blower drive motor 69, forward blower 67, forward gas flow control valve 75, gas inlet duct 86 gas discharge duct 85, aft blower 68, and aft flow control valve 76. The forward blower 67 supplies pressurized gas to the forward recess 58 and intermediate recess 59 in this instance and the aft blower supplies pressurized gas to the aft recess 60.

It is possible to regulate gas pressures in the recesses 58, 59, 60 to thereby dramatically improve

REPLACEMENT SHEET
05 MAR 1997

pitch, roll, and heave of the boat by use of the gas flow control valves 75 and 76. The operation of these valves is normally directed by a controller 79 that receives as inputs recess pressure readings from pressure transducers 87 through connectors 92. The controller 79 would also normally receive hull orientation data (pitch, roll, and yaw values) from a gyrostabilizer (not shown) and g-force acceleration values from an accelerometer (not shown) that would normally be mounted internal to the controller 79. The controller 79 processes said information and in turn sends out directing signals to the gas flow control valves 75 and 76. Controller function is such that if a pitch down by the bow condition is encountered that the controller 79 would open forward gas flow control valve 75 fully and restrict flow through the aft gas flow control valve 76. Such action would increase the gas pressure in forward recess 58 and intermediate recess 59 and decrease gas pressure in aft recess 60 thereby returning the boat 37 to a more normal trim. It is to be noted that gas flow control valves can be located between the blowers 67 and 68 and the recesses 58, 59, and 60 if desired. Also, gas flow control valves can be positioned to vent pressure from the recesses 58, 59, and 60 to accomplish the same thing although such an arrangement would not be as efficient as it would waste blower power.

Also shown in Figure 5 is an inset 93 into a fixed stern seal 88 more horizontal lower surface 101 that is supplied with pressurized gas from aft recess 60. A fixed intermediate seal 89 and fixed forward seal 90 are also shown. More angled seal surfaces 100 are also shown. Gas flow is shown by gas flow arrows 74.

Figure 6 is a cross sectional view illustrating the boat 37 in a bow pitched up orientation that can occur when running in a rough sea as is shown by sea surface waterline 34. The advantages of using movable forward seals 51, 52, 53, and 54 here are made clear as such seals

REPLACEMENT SHEET
05 MAR 1997

restrict gas flow leakage from intermediate recess 59 when the hull is clear of the water. It can be seen that, in this example, the forward recess 58 is clear of the sea surface 34 and therefore loses its pressurized gas until reentry into the water occurs. Also shown are intermediate movable seals 55 and 56 which are riding on recess waterline 35 in this example. It is to be noted that movable seal hinge pins 50 are shown in movable seals 51 and 55 only in this sidehull centerline view. An aft movable seal 91 that is controlled in positioning by actuator 62 is also shown. The aft movable seal 91 can help control the level of water in the aft recess 60 and can also aid in direction of water flow to the surface propeller propulsor 131 in this instance.

Figure 6 also shows the gas pressurization and control system. This includes a blower drive motor 61, forward blower 67, forward gas flow control valve 77, aft blower 68, aft gas flow control valve 78, inlet gas flow ducting 86, outlet gas flow ducting 85, gas flow arrows 74, pressure transducers 87, controller 79, and connectors 92. The operation and function of this gas pressurization system is basically the same as that described under Figure 5 so the reader is referred to that preceding description. However, Figure 6 adds that the controller 79 can also direct movement of a movable seal such as aft movable seal 91 by directing operation of actuator 62. Further shown in Figure 6 are a main drive motor 130, center bow 38, and deck line 46.

Figure 7 provides a plan view of a preferred gas pressurization system layout. In this system the port side blowers 65 and 66 are driven by port side blower motor 61 with gas flow to the blowers controlled by gas flow valves 75 and 76. Starboard side blowers 67 and 68 are driven by blower drive motor 69 and flow to the blowers is controlled by gas flow control valves 77 and 78. There are also interconnecting ducts 82 and 83 that

REPLACEMENT SHEET
05 MAR 1997

insure that pressurized gas is available to the port sidehull 96 in the event of failure of the port side blower motor 61 or vise versa. There would normally be valves 80 and 81 placed in the interconnecting ducts 82 and 83. Operation of the gas flow control valves 75, 76, 78, 79, 82, and 83 is orchestrated by a controller 79 through connectors 92.

Figure 8 shows operation of the vertically oriented air vented step compartments 47 similar to those shown in profile in Figure 1, 3, and 4. These step compartments 47 noticeably reduce the wetted area of a sidehull (or a single hull for that matter) and hence reduce the overall wetted area resistance of the hull. It is to be noted that the inboard side (lower side in Figure 8) of the port sidehull is substantially parallel to the vertical centerline plane 33 of the port sidehull in way of the vertically oriented air vented step compartments 47 while the outboard side (upper side in Figure 8) tapers inward toward the vertical centerline plane 33 as it goes aft toward the transom 97. The reason for tapering the sides inward is that this either reduces or eliminates the rearward resistance force caused by impingement of water, as shown by horizontal plane adjacent to the hull water surfaces 36, from preceding vertically oriented steps 49 onto following vertically oriented steps 49. Of course, vertically oriented step compartments 47 and/or the inward tapering of a side can be done on either or both sides of a sidehull and can also be applied to the center bow of other areas if applicable.

Figure 8 also shows that the outer chine 42 remains substantially parallel to the inner chine 43, both are substantially parallel to the vertical centerline plane 33, in the preferred embodiment of the invention. Examination of Figures 1, 3, and 4 shows that the vertically oriented air vented step compartments 47 actually stop at or above the chines 42 and 43 in the

REPLACEMENT SHEET
05 MAR 1997

preferred embodiment of the instant invention. This allows for a wider more efficient gas cushion and/or hull structure footprint on the water surface.

Figure 9 illustrates a bow view of a boat 37 and shows that the boat of this invention offers a very high wave clearing distance from the sea surface 34 to the wetdeck 41.

Figure 10 as well as Figure 11 further show water spray patterns that come off the hull when operating at high speeds in calm seas.

Figure 11 shows a typical cross section as taken through the aft blowers 66 and 68. Shown are the blower discharge gas flow ducts 85, interconnecting gas flow ducts 83, interconnecting valve 81, and gas flow arrows 74.

Figure 11 also shows the starboard sidehull 95 movable seal member 55 having an inverted-V shape on its underside. An intermediate movable seal 55 would normally operate between substantially parallel or vertical inside surfaces 57 as are shown in the starboard sidehull 95. It is normally desirable to have some shape to the underside of a movable seal member, over at least part of its length, to provide best ride qualities in rough seas. Examination of the port sidehull 96 shows a preferred inverted-V shape to the upper surfaces of the aft recess 60. In this preferred embodiment, the recess surface is biased toward having more material on the outboard side than the inboard side. That is actually done on purpose since such biasing gives more lifting forces, when in water contact, outboard to the boat which adds to roll stability (i.e., lifting forces are further outboard from the boat's vertical centerline plane 32 resulting in a greater restoring roll moment).

Figure 12 shows a section taken through the forward gas flow control valves 75 and 77. Figure 12 also shows operation in rough seas with the port sidehull 96 recess 58 clear of the water and therefore vented of

REPLACEMENT SHEET
05 MAR 1997

pressurized gas while the starboard sidehull 95 recess retains gas pressure since its movable seal 52 extends downward below the keels 44 and 45 and thus at least partially seals against gas leakage. A forward movable seal 52 would, in the preferred embodiment, function between substantially parallel inside surfaces 57 of a sidehull as are shown in this starboard sidehull 95.

Figure 12 also shows a biasing of the upper surfaces of recess 58 in the port sidehull 96 in a similar manner as that shown in Figure 11. Note that the outward biasing of recess surfaces is not necessary for function of the invention and that symmetrical recess surfaces or, indeed, biasing of recess surfaces toward the inboard sides of the recesses can also be utilized. Further, though preferred, it is not necessary that sidehull sides be symmetrical about their vertical centerline plane for the instant invention to function.

From observation of Figures 5, 6, 11, and 12 it will be noted that average recess depth (distance above sidehull keels 44 and 45) is significantly less than the depth of the wetdeck 41 above the sidehull keels 44 and 45. This is a very important characteristic of the instant invention as compared to the SECAT, described under the preceding background of the invention section of this document, where the depth of the wetdeck and the depth of the recess are the same. The SECAT utilizes full depth flexible seals fore and aft in each sidehull recess in order to allow waves to pass through essentially unmolested so long as they are less than wetdeck height. In the preferred embodiment of the present invention the waves are parted with a pointed ship like bow at the forward end of each sidehull which thereby directs them away from the recess. Therefore, the present invention can utilize average recess depths that are only half or less of wetdeck depth. Actually, twenty-five percent of wetdeck depth is considered a reasonable and workable

REPLACEMENT SHEET
05 MAR 1997

number in most cases for the instant invention. The advantages of the shallower recesses of the instant invention are several, they include: 1) shallower draft with the blowers off, 2) an inherently stronger and lighter structure, and 3) better ride and handling characteristics with the blowers off.

Figure 13 shows the starboard sidehull 95 forward movable seals 51, 52, 53, and 54 in their extended downward position and in contact with the sea surface waterline 34. These forward movable seals 51, 52, 53, and 54 are attached to the sidehull recess 58 structure by hinge pins 50 in this instance. Only the most forward movable seal 51 shows the hinge pins 50 as the other hinge pins 50 do not pass through the sidehull centerline in this configuration. Operational control of the aftermost forward movable seal 54 is shown being accomplished by an actuator 62 in this case although an actuator is not necessary for function. It is also possible to use spring biased systems, dashpots, etc. (not shown) to provide restoring forces to one or all of the movable seals.

Figure 14 shows forward movable seals 51, 52, 53, and 54 in their retracted position. As shown in the preferred embodiment the movable seals not only overlap fore and aft but also overlap on their sides which is the preferred situation as it prevents gas flow leakage sideways from a recess when the recess is clear of the water surface. Figure 14 also shows best attachment means in the form of movable seal hinge pins 50. It is to be noted that the hinge pins 50 do not extend through movable seals 52, 53, and 54 as such would preclude the movement of movable seals 52, 53, and 54 in this instance.

Figure 15 shows the intermediate movable seals 55 and 56 disposed in aft recess 60. In this case the movable seals 55 and 56 are following the recess waterline 35 and the movable seals 55 and 56 are retracted. Also shown is a movable seal hinge pin 50. The method of

REPLACEMENT SHEET
05 MAR 1997

construction of these aft movable seals 55 and 56 involves a closed cell foam filer 70, and skin covering 71. This method of construction provides a very light weight and strong movable seal structure that is impervious to moisture since, in the preferred version, a closed cell plastic foam is used for the filler 70. This method of construction would preferably be applied to manufacture of all movable seals; however, other means of seal construction, including use of flexible seal materials could be utilized.

Figure 16 shows an actuator 62 used to position an aft movable seal 91 in the starboard sidehull 95. It is to be noted that some shape is provided in this particular version of the aft movable seal 91.

Figure 17 shows an optional dashpot damper or shock absorber 63 and starboard sidehull aft movable seal 91. Some shape has been added to the underside of the aft movable seal 91 to reduce water impact loadings in rough seals. It is to be noted that a simple spring (not shown) or other force biasing means could be used in conjunction with or in place of the shock absorbing dashpot 63 shown.

Figure 18 illustrates a preferred embodiment of a movable aft seal 91 that utilizes a simple gas spring pressure bellows 64 to control the positioning of the aft seal in the starboard sidehull 95. The actual water contacting member is in reality a plate like member of fiberglass or other material in the preferred embodiment of the invention. The advantage of using the gas spring bellows is: 1) pressurized gas is already available on board the boat, 2) the gas bellows not only acts as a shock absorbing member but also does the positioning of the movable aft seal, and 3) positioning of the movable aft seal 91 can easily be controlled using outputs from the controller presented in Figures 5, 6, and 7 to regulate a gas pressure valve (not shown) that regulates pressure in the gas spring bellows 64.

REPLACEMENT SHEET
05 MAR 1997

Figures 19-29 illustrates an embodiment of a boat 37 with severely elongated forwardly extending sidehulls as shown by starboard sidehull 95. This offers the advantage of longer more efficient sidehulls and better rough sea ride qualities since the sidehull bows can actually run through a wave rather than over a wave. In this embodiment sidehull chine 42, normally referred to as a hard chine, terminates about midship. This is because, in this embodiment of the invention, the forward flatter surfaces of the hard chine sidehull outer sidewall 113 blend into a smoother more rounded surface as they approach midship. This approach yields good stability forward at the bow and minimum resistance aft.

Figure 20 presents a bottom plan of the boat 37 of Figure 19. Both the port sidehull 96 and starboard sidehull 95 have forward recesses 58 and aft recesses 60 as separated by movable seal members 103 through 108 that are restrained by hinge pins 50. Pressurized gas is injected into the forward recesses 58 through gas discharge openings 84 with gas flow arrows 74 showing direction of gas flow. Sidehull gas cushion aft seal lower surfaces 88 are led by angled surfaces 115 and 116. Sidehull inner chines 43 and inner keels 45 bound the starboard sidehull inner sidewall 112 and the port sidehull outer sidewall 113. The chines blend out going aft of midship in this preferred embodiment since the sidewalls go from flat to rounded going aft. The same situation applies to the port sidehull inner sidewall 110 and outer sidewall 111.

Also shown in Figure 20 are waterjet inlets 102. It is to be noted that Figure 20 presents asymmetrical sidehull and air cushion configurations with substantially straight port and starboard sidehull inner sidewalls 110 and 112. While the symmetrical sidehull bow concept, as shown in Figure 2 earlier, is preferred, any manner of symmetrical or asymmetrical sidehull shape if usable. That is because the symmetrical, or partially symmetrical,

REPLACEMENT SHEET
05 MAR 1997

sidehull shape deflects part of a wave to each side of the point of a sidehull bow while the asymmetrical sidehull presented in Figure 20 deflects all of a wave to the outside. Thus the symmetrical sidehull gives the best ride qualities in rough seas.

Figure 21 shows the bow of the sidehull pitched downward and into a wave on the sea surface 34. In this illustration, the pointed sidehull has entered a wave rather than riding over it which makes for a smoother ride. With the boat in a pitch down attitude as shown, the forward gas cushion would be automatically pressurized more than the aft gas cushion in order to correct to a horizontal attitude. As such, the port forward ride control valve 75 that supplies the port forward blower 65 would be automatically fully opened and the port aft ride control valve 76 that supplies the port aft blower 66 at least partially closed. That procedure provides maximum pressure to the forward recess 58 gas cushion and minimum pressure to the aft recess 60 gas cushion thus restoring the hull 37 to a more horizontal attitude.

It is preferred that movable seal elements, such as movable seal element 106 shown, that ride or plane on the air cushion water surface 35 be positioned between sidehull forward and aft recess 58, 60 air cushions. It is normally necessary that a way to force the movable seal elements downward, such as spring 109, be used to insure that the seal elements stay in place when the forward recess 58 gas cushion is at a higher pressure than the aft recess 60 gas cushion. It is to be noted also that additional gas cushion recesses can be used in either sidehull if desired.

Figure 22 shows shape of the port sidehull 95 and the starboard sidehull 96 at that forward section. It can be seen that the angle to horizontal of the lower surfaces are less than that of the upper surfaces. This provides

REPLACEMENT SHEET
05 MAR 1997

for a greater lifting force than submerging force which helps for restoration of a horizontal attitude after the craft 37 pitches down by the bow.

Figure 23 shows hull 37 shape forward including an optional center forward bow 38 positioned forward of the sidehull connecting wetdeck. Note that these forward portions of the port and starboard sidehull outer sidewalls 111, 113 have hard outer chines 42 and relatively flat surfaces that connect to the sidehull outer keels 44 in this preferred embodiment. The port and starboard sidehull inner sidewalls 110, 112 are very narrow and preferably substantially water slicing like a knife blade in order to impart minimum resistance.

Figure 24 illustrates the port and starboard aft blowers 66, 68 and how they supply pressurized gas to the back side of movable seals 103 through 108. The movable seals 103 through 108 are normally attached by hinge pins 50 to the hull 37. Air enters, as shown by air flow arrows 40, the port and starboard flow control valves 76, 78 and then is pressurized by aft blowers 66, 68 and discharged as indicated by gas flow arrows 74. Since the craft 37 is shown running level on a smooth sea surface in this example, the movable seals 103 through 108 are level and riding on the gas cushion water surfaces 35. There are normally substantially vertical adjacent to movable seal surfaces 57 on the hull.

With further reference to Figure 24, it is important to note that the port and starboard sidehull sidewalls 111, 113 have, preferably, become more rounded in shape on their lower portions than in the more forward sections illustrated by Figures 22 and 23. This approach of going from flatter angled or hard chine sidewall surfaces forward to more rounded surfaces aft provides good pitch stability forward coupled with best hydrodynamic efficiencies aft. It is also to be noted that the port and starboard sidehull's outer sidewalls

REPLACEMENT SHEET
05 MAR 1997

111, 113 are rather wider and deeper than the port and starboard sidehull's inner sidewalls 110, 112. This gives highest transverse stability and minimum resistance.

Figure 25 is a cross sectional view the same as Figure 24, however, in Figure 25, the craft 37 is in a roll to starboard. As such, movable seals 103 through 108 are angled as they follow the gas cushion water surface 35. It is preferred that movable seals rather than fixed seals, as were shown in the port sidehull of Figures 2 and 5 for example, be positioned between sidehull gas cushions as they will follow the sidehull inner or gas cushion water surfaces 35 whereas the fixed seals cannot. Other items shown in Figure 25 are the same as listed under the just preceding detailed description of Figure 24 so they will not be repeated here.

Figure 26 illustrates a typical preferred hull transverse cross section that occurs once aft and clear of the bow sections and any intermediate movable seals such as were shown in Figures 24 and 25. In the preferred case of a sidehull having only forward and aft gas cushions, it is desirable that a movable seal be positioned at about the middle of the waterline length of a sidehull or slightly forward of said middle of the waterline length.

It is important to realize that the port and starboard sidehull inner sidewalls 110, 112 are narrower and also terminate higher on their lower water contacting surfaces than the port and starboard outer sidewalls 111, 113. This provides for minimum hydrodynamic drag coupled with maximum stability in roll. This effect is further discussed in the description of Figure 27 which follows.

It is to be noted that the sidehull sidewall inner surfaces 115 and outer surfaces 116 are now angling inward in this preferred version of the instant invention.

Figure 27 is a cross sectional view which is the same as Figure 26 except the craft or hull 37 is in a roll to starboard. It is important to realize that the inboard

REPLACEMENT SHEET
05 MAR 1997

sidewalls of the sidehulls are narrower and also terminate higher on their lower water contacting surfaces than the outboard sidewalls in this preferred embodiment. This results in less resistance from the inboard sidewalls. Upon examination of Figure 27, it can be realized that the port recess gas cushion water surface 35 is restrained by substantially even height port sidehull inner and outer sidewalls 110 and 111 in this roll condition. It is also important to note that the starboard sidehull gas cushion water surface 35 is lower in elevation and therefore at a higher pressure providing a maximum roll correcting lifting moment from the starboard side which is due to the higher starboard sidehull gas cushion pressure.

Figure 28 shows the preferred inverted-V stern seal. Note the more extreme angling to horizontal of the recess inner and outer angled surfaces 115, 116. Note also that the extension of these surfaces 115, 116 upward results in their meeting in an apex of the most desired inverted-V shape. It is considered a definition of this invention that the meeting of such angled recess surfaces 115, 116 at the apex 114 to form an inverted-V, either directly or in an extension as shown here, is an inverted-V shape. It is also a desirable feature that this apex occur below a deck line 46 of the hull 37, at least over much of the shaping of the aft seals, as that defines a good final inverted-V shape for good rough sea seal ride qualities.

Figure 29 shows a section of the gas recess stern seals. It can be seen that they have developed into almost full span horizontal flat surfaces 88. There is still a small inverted-V section that meets at apex 114. In the optimum low resistance configuration, this goes to a full-width substantially flat seal surface 88 further aft as can be noted from examination of Figure 20. It is also desirable, from a minimum high speed resistance standpoint, that the port and starboard sidehull inner

REPLACEMENT SHEET
05 MAR 1997

sidewalls 110, 112 blend into the seal surface 88 in this area.

Figure 30 illustrates some typical intermediate movable seal elements 106, 107, 108 and a seal hinge pine 50. In this instance, the movable seal elements are at various elevations on their lower surfaces as they would be when following an irregular water surface. The downward force elements, shown as springs in earlier Figure 21, are not shown to simplify the illustration presented here in Figure 30.

Figure 31 shows a single movable seal element 106 and hinge pin 50 that is force biased and damped by a spring 109 and dashpot or shock absorber 63 that are attached to hull 37. While the shock absorber 63 and spring 109, either singularly or in combination as shown, are a good means to generate an additional downward force on the movable seal element 106, other means may be used. These include, but are not limited to, the force generating systems shown in preceding Figures 16, 17, and 18.

REPLACEMENT SHEET
05 MAR 1997

* C L M S *

CLAIMS

1. A boat having supporting gas cushions disposed in catamaran-like sidehulls with said catamaran-like sidehulls in mechanical communication with connecting hull structure, and with said supporting gas cushions supplied with pressurized gas by gas pressurization means, characterized by a recess in each catamaran-like sidehull with said recesses at least partially restraining the pressurized gas cushions, each of said catamaran-like sidehulls having inner and outer sidewalls, with the recess in at least one of said catamaran-like sidehulls, as seen in a horizontal water contacting plane of said boat, enlarging in width over at least a portion of its longitudinal length going aft from its forward portions when said boat is operating at speeds of over 25 knots in a calm sea with its gas cushions pressurized to a sufficient pressure to support a majority of boat weight.

2. A boat having supporting gas cushions disposed in catamaran-like sidehulls with said catamaran-like sidehulls in mechanical communication with connecting hull structure, said supporting gas cushions supplied with pressurized gas by gas pressurization means, and said supporting gas cushions pressurized at sufficient pressure to support a majority of boat weight, characterized by said catamaran-like sidehulls being, at least in part, individually boat shaped with substantially more narrow bows than aft sections where said boat shape is defined by an intersection of said catamaran-like sidehulls and a calm sea surface waterline when said supporting gas cushions are pressurized at sufficient pressure to support a majority of boat weight and the boat is underway at speeds of more than 25 knots, said catamaran-like sidehulls having recesses in their undersides for restraining at least a part of said pressurized supporting gas cushions and a lower water

REPLACEMENT SHEET
05 MAR 1997

* C L M S *

contacting surface of said catamaran-like sidehull both, at least in part, bounds a recess and diverges further from the catamaran-like sidehull's vertical centerline plane going aft from proximal said recess' forward portions.

3. The boat of claim 2, characterized in that said lower water contacting surface that at least partially bounds a recess of the catamaran-like sidehull, after diverging, becomes substantially more parallel to the vertical centerline plane of the sidehull over at least portions of an aft section of said catamaran-like sidehull.

4. The boat of claim 2 or 3, characterized in that said recesses in the catamaran-like sidehulls enlarge in width by at least twenty-five percent from their forward sections to their aft sections.

5. The boat of claim 2, 3 or 4, characterized in that an average height of said recess above a lowest portion of a catamaran-like sidehull keel is less than fifty percent of a distance from the lowest portion of the catamaran-like sidehull keel to a wetdeck of said boat.

6. The boat of any of claims 2 to 5, characterized in that said catamaran-like sidehulls are asymmetrical when viewed in a calm sea surface waterline plane of said boat.

7. The boat of any of claims 2 to 6, characterized by a center bow in mechanical communication with said connecting hull structure.

8. The boat of claim 7, characterized in that said center bow extends, at least in part, forwardly of said sidehulls.

9. The boat of any of claims 2 to 8, characterized by at least one substantially rigid seal member disposed, at least partially, proximal one of said catamaran-like sidehull recesses and said substantially rigid seal member's underside, when viewed in at least one

REPLACEMENT SHEET
05 MAR 1997

* C L M S *

vertical transverse plane of the boat, contains surfaces that are angled to horizontal over a majority of said seal member's width.

10. The boat of claim 9, characterized in that said substantially rigid seal member, as seen in a vertical transverse plane of the boat, extends over a majority of catamaran-like sidehull recess width.

11. The boat of claim 9, characterized in that said substantially rigid seal member comprises, at least in part, lower sealing surfaces that are substantially more horizontal, as viewed in a vertical transverse plane of the boat, than said substantially rigid seal member's surfaces proximal to and forward of said lower sealing surfaces.

12. The boat of claim 9, 10 or 11, characterized in that at least one of the substantially rigid seal members, as seen in a vertical transverse plane of the boat has an inverted-V shape.

13. The boat of any of claims 2 to 12, characterized by vertically oriented vented steps in a side surface of each of said catamaran-like sidehulls.

14. The boat of claim 13, characterized in that at least a part of said catamaran-like sidehull's side surface, as viewed in a horizontal plane of said boat, is closer to a vertical centerline plane of said catamaran-like sidehull over an aft portion than a more forward portion.

15. The boat of any of claims 2 to 14, characterized by first forward movable seals disposed proximal a forward portion of said catamaran-like sidehull recesses where said first forward movable seals are movable in relation to the boat.

16. The boat of claim 15, characterized in that said first forward movable seals, when in lower positions, extend below catamaran-like sidehull keels.

17. The boat of claim 15 or 16, characterized by a second forward movable seal that is movable in relation

REPLACEMENT SHEET
05 MAR 1997

* C L M S *

to the boat and that is longitudinally positioned, at least in part, aft of and proximal to the first forward movable seal.

18. The boat of any of claims 2 to 17, characterized by an intermediate movable seal that is at least partially disposed proximal a catamaran-like sidehull recess with said intermediate movable seal movable in relation to the boat.

19. The boat of claim 2, characterized by a first and a second recess in each of the catamaran-like sidehulls, said first and second recesses, at least in part, separated by recess seal members.

20. The boat of claim 19, characterized in that the gas pressurization means is capable of supplying gas at different pressures to the first and the second recesses.

21. A boat having supporting gas cushions disposed in catamaran-like sidehulls with said catamaran-like sidehulls in mechanical communication with a connecting hull structure, said supporting gas cushions supplied with pressurized gas by gas pressurization means, and said supporting gas cushions pressurized at sufficient pressure to support a majority of boat weight, characterized by a recess in each catamaran-like sidehull with said recesses at least partially restraining the pressurized gas cushions, and lower water contacting surfaces of said catamaran-like sidehulls that both bound the recesses and diverge further, when the supporting gas cushions are pressurized at a sufficient pressure to support a majority of boat weight, from vertical centerline planes of said catamaran-like sidehulls going aft from proximal forward portions of said recesses and said lower water contacting surfaces of the catamaran-like sidehulls, after diverging, then become substantially more parallel to the vertical centerline planes of the sidehulls over at least portions of their aft sections.

REPLACEMENT SHEET
05 MAR 1997

* C L M S *

22. The boat of claim 21, characterized in that said recesses in the catamaran-like sidehulls enlarge in width by at least twenty-five percent from their forward sections to their aft sections.

23. The boat of claim 21 or 22, characterized in that an average height of said recess above a lowest portion of a catamaran-like sidehull keel is less than fifty percent of a distance from the lowest portion of the catamaran-like sidehull keel to a wetdeck of said boat.

24. The boat of claim 21, 22 or 23, characterized in that said catamaran-like sidehulls are asymmetrical when viewed in a calm sea surface waterline plane of said boat.

25. The boat of any of claims 21 to 24, characterized by a center bow that is in mechanical communication with said connecting hull structure.

26. The boat of any of claims 21 to 25, characterized by at least one substantially rigid seal member disposed, at least partially, proximal one of said catamaran-like sidehull recesses and said substantially rigid seal member's underside, when viewed in at least one vertical transverse plane of the boat, contains surfaces that are angled to horizontal over a majority of said seal member's width.

27. The boat of claim 26, characterized in that said substantially rigid seal member, as seen in a vertical transverse plane of the boat, extends over a majority of catamaran-like sidehull recess width.

28. The boat of claim 26 or 27, characterized in that said substantially rigid seal member comprises, at least in part, lower sealing surfaces that are substantially more horizontal, as viewed in a vertical transverse plane of the boat, than said substantially rigid seal member's surfaces proximal to and forward of said lower sealing surfaces.

29. The boat of claim 26, 27 or 28, characterized in that at least one of the substantially

REPLACEMENT SHEET
05 MAR 1997

rigid seal members, as seen in a vertical transverse plane of the boat, has an inverted-V shape.

30. The boat of any of claims 21 to 29, characterized by a vertically oriented vented steps in a side surface of at least one of said catamaran-like sidehulls.

31. The boat of claim 30, characterized in that at least a part of said side surface of said catamaran-like sidehull in way of said vertically oriented vented steps, as viewed in a horizontal plane of said boat, is narrower over an aft portion than a more forward portion.

32. The boat of any of claims 21 to 31, characterized by a first forward movable seal disposed proximal a forward portion of one of said catamaran-like sidehull recesses where said first forward movable seal is movable in relation to the boat.

33. The boat of claim 32, characterized in that said first forward movable seal, when in lower positions, extends below a catamaran-like sidehull keel line of said catamaran-like sidehull.

34. The boat of claim 32 or 33, characterized by a second forward movable seal that is movable in relation to the boat and that is longitudinally positioned, at least in part, aft of and proximal to the first forward movable seal.

35. The boat of any of claims 21 to 34, characterized by an intermediate movable seal that is at least partially disposed proximal a catamaran-like sidehull recess with said intermediate movable seal movable in relation to the boat.

36. The boat of any of claims 21 to 35, characterized by the connecting hull structure being in mechanical communication with an air flow turbulence generator.

37. The boat of any of claims 21 to 36, characterized by a first and a second recess in each of

REPLACEMENT SHEET

05 MAR 1997

* C L M S *

the catamaran-like sidehulls, said first and second recesses, at least in part, separated by recess seal members.

38. The boat of claim 37, characterized in that the gas pressurization means is capable of supplying gas at different pressures to the first and the second recesses.

39. A boat having supporting gas cushions disposed in catamaran-like sidehulls with said catamaran-like sidehulls in mechanical communication with connecting hull structure, said supporting gas cushions supplied with pressurized gas by gas pressurization means, and said supporting gas cushions pressurized at sufficient pressure to support a majority of boat weight, characterized by a center bow that extends forwardly of upper forward portions of said catamaran-like sidehulls with said center bow in mechanical communication with the connecting hull structure, said connecting hull structure extending from proximal an upper forward portion of said catamaran-like sidehulls to proximal an upper forward portion of said center bow thereby forming a boat shape with a substantially pointed bow as defined by deck lines of said boat as seen in a top plan view of said boat and said catamaran-like sidehulls have recesses in their undersides for restraining at least part of said pressurized supporting gas cushions, and wherein at least one of said catamaran-like sidehull recesses enlarges going aft from its forward portions.

40. The boat of claim 39, characterized by at least one substantially rigid seal member disposed proximal one of said catamaran-like sidehull recesses and said substantially rigid seal member's underside, when viewed in at least one vertical transverse plane of the boat, contains surfaces that are angled to horizontal over a majority of said seal member's width.

41. The boat of claim 40, characterized in that said substantially rigid seal member, as seen in a

REPLACEMENT SHEET
05 MAR 1997

vertical transverse plane of the boat, extends over a majority of catamaran-like sidehull recess width.

42. The boat of claim 39, 40 or 41, characterized by vertically oriented vented steps in a side surface of at least one of said catamaran-like sidehulls.

43. The boat of any of claims 39 to 42, characterized by a first forward movable seal disposed proximal a forward portion of one of said catamaran-like sidehull recesses where said first forward movable seal is movable in relation to the boat.

44. The boat of any of claims 39 to 43, characterized by a first and a second recess in each of the catamaran-like sidehulls, said first and second recesses, at least in part, separated by recess seal members.

45. The boat of claim 44, characterized in that the gas pressurization means is capable of supplying gas at different pressures to the first and the second recesses.

46. A boat having supporting gas cushions disposed in catamaran-like sidehulls with said catamaran-like sidehulls in mechanical communication with connecting hull structure, said supporting gas cushions supplied with pressurized gas by gas pressurization means, and said supporting gas cushions pressurized at sufficient pressure to support a majority of boat weight, characterized by each of said catamaran-like sidehulls having, at least in part, a substantially single bow with said catamaran-like sidehulls, at least in part, being lower than the connecting hull structure, said connecting hull structure having a wetdeck on its underside with said wetdeck extending a majority of a distance between the catamaran-like sidehulls, and said catamaran-like sidehulls having recesses in their undersides for restraining at least part of said pressurized supporting

REPLACEMENT SHEET

0 5 MAR 1997

gas cushions with a recess in one of said catamaran-like sidehulls, over at least a portion of its longitudinal length, enlarging in width going aft from its forward portions as seen in a horizontal water contacting plane of said boat when said boat is operating in a calm seal with the gas cushions pressurized to a sufficient pressure to support a majority of boat weight.

47. The boat of claim 46, characterized in that the recess in one of the catamaran-like sidehulls that is enlarging in width then becomes more constant in width over at least a portion of its longitudinal length.

48. The boat of claim 46 or 47, characterized in that said recesses in the catamaran-like sidehulls enlarge in width by at least twenty-five percent from their forward sections to their aft sections.

49. The boat of claim 46, 47 or 48, characterized in that an average height of said recess above a lowest portion of a catamaran-like sidehull keel is less than fifty percent of a distance from the lowest portion of the catamaran-like sidehull keel to a wetdeck of said boat.

50. The boat of any of claims 46 to 49, characterized in that said catamaran-like sidehulls are asymmetrical when viewed in a calm sea surface waterline plane of said boat.

51. The boat of any of claims 46 to 50, characterized in that a center bow in mechanical communication with said connecting hull structure.

52. The boat of claim 51, characterized in that said center bow extends, at least in part, forwardly of said sidehulls.

53. The boat of any of claims 46 to 52, characterized by at least one substantially rigid seal member disposed, at least partially, proximal one of said catamaran-like sidehull recesses and said substantially rigid seal member's undersides, when viewed in at least

REPLACEMENT SHEET
05 MAR 1997

one vertical transverse plane of the boat, contains surfaces that are angled to horizontal over a majority of said seal member's width.

54. The boat of claim 53, characterized in that said substantially rigid seal member, as seen in a vertical transverse plane of the boat, extends over a majority of catamaran-like sidehull recess width.

55. The boat of claim 53, characterized in that said substantially rigid seal member comprises, at least in part, lower sealing surfaces that are substantially more horizontal, as viewed in a vertical transverse plane of the boat, than said substantially rigid seal member's surfaces proximal to and forward of said lower sealing surfaces.

56. The boat of claim 53, characterized in that at least one of the substantially rigid seal members, as seen in a vertical transverse plane of the boat, has an inverted-V shape.

57. The boat of any of claims 46 to 56, characterized by vertically oriented vented steps in a side surface of at least one of said catamaran-like sidehulls.

58. The boat of claim 57, characterized in that at least a part of said side surface of said catamaran-like sidehull in way of said vertically oriented vented steps, as viewed in a horizontal plane of said boat, is narrower over an aft portion than a more forward portion.

59. The boat of any of claims 46 or 58, characterized by a first forward movable seal disposed proximal a forward portion of one of said catamaran-like sidehull recesses where said first forward movable seal is movable in relation to the boat.

60. The boat of claim 59, characterized in that said first forward movable seal, when in lower positions, extends below a keel of said catamaran-like sidehull.

REPLACEMENT SHEET
05 MAR 1997

61. The boat of claim 59, characterized by a second forward movable seal that is movable in relation to the boat and that is longitudinally positioned, at least in part, aft of and proximal to the first forward movable seal.

62. The boat of any of claims 46 to 61, characterized by an intermediate movable seal that is at least partially disposed proximal a catamaran-like sidehull recess with said intermediate movable seal movable in relation to the boat.

63. The boat of any of claims 46 to 62, characterized by a first and a second recess in each of the catamaran-like sidehulls, said first and second recesses, at least in part, separated by recess seal members.

64. The boat of claim 63, characterized in that the gas pressurization means is capable of supplying gas at different pressures to the first and the second recesses.

65. A boat having supporting gas cushions disposed in catamaran-like sidehulls with said catamaran-like sidehulls in mechanical communication with a connecting hull structure, said supporting gas cushions supplied with pressurized gas by gas pressurization means, and said supporting gas cushions pressurized at sufficient pressure to support a majority of boat weight, characterized by a first forward movable seal that is movable relative to the boat with said first forward movable seal disposed, at least partially, between substantially parallel internal surfaces of a catamaran-like sidehull and a recess in said catamaran-like sidehull that at least partially restrains the catamaran-like sidehull's pressurized supporting gas cushion and said recess enlarges aft of the catamaran-like sidehull's substantially parallel internal surfaces.

66. The boat of claim 65, characterized in that after enlarging, said recess becomes substantially

REPLACEMENT SHEET
05 MAR 1997

* C L M S *

constant in width over at least portions of its aft sections.

67. The boat of claim 65 or 66, characterized in that said recesses in the catamaran-like sidehulls enlarge in width by at least twenty-five percent from their forward portions to their aft portions.

68. The boat of claim 65, 66 or 67, characterized in that an average height of said recess above a lowest portion of a catamaran-like sidehull keel is less than fifty percent of a distance from the lowest portion of the catamaran-like sidehull keel to a wetdeck of said boat.

69. The boat of any of claims 65 to 68, characterized in that said catamaran-like sidehulls are asymmetrical when viewed in a calm sea surface waterline plane of said boat.

70. The boat of any of claims 65 to 69, characterized by a center bow in mechanical communication with said connecting hull structure.

71. The boat of any of claims 65 to 70, characterized by at least one substantially rigid seal member disposed, at least partially, proximal one of said catamaran-like sidehull recesses and said substantially rigid seal member's underside, when viewed in at least one vertical transverse plane of the boat, contains surfaces that are angled to horizontal over a majority of said substantially rigid seal member's width.

72. The boat of any of claims 65 to 71, characterized by vertically oriented vented steps in a side surface of each of said catamaran-like sidehulls.

73. The boat of claim 72, characterized in that at least a part of said catamaran-like sidehull in way of said side surface, as viewed in a horizontal plane of said boat, is closer to a vertical centerline plane of said catamaran-like sidehull over an aft portion than a more forward portion of said catamaran-like sidehull.

REPLACEMENT SHEET

05 MAR 1997

* C L M S *

74. The boat of any of claims 65 to 73, characterized in that said first forward movable seal, when in lower positions, extends below a catamaran-like sidehull keel of said catamaran-like sidehull.

75. The boat of any of claims 65 to 74, characterized by a second forward movable seal that is movable in relation to the boat and that is longitudinally positioned, at least in part, aft of and proximal to the first forward movable seal.

76. The boat of claim 75, characterized in that said second forward movable seal extends, at least in part, transversely outward beyond said first forward movable seal.

77. The boat of any of claims 65 to 76, characterized by an intermediate movable seal that is at least partially disposed proximal a catamaran-like sidehull recess with said intermediate movable seal movable in relation to the boat.

78. The boat of any of claims 65 to 77, characterized by a first and a second recess in each of the catamaran-like sidehulls, said first and second recesses, at least in part, separated by recess seal members.

79. The boat of claim 78, characterized in that the gas pressurization means is capable of supplying gas at different pressures to the first and the second recesses.

80. The boat of any of claims 65 to 79, characterized by a movable seal that is positioned proximal an aft end of the catamaran-like sidehull's recess.

81. A boat having supporting gas cushions disposed in catamaran-like sidehulls with said catamaran-like sidehulls in mechanical communication with connecting hull structure, said supporting gas cushions supplied with pressurized gas by gas pressurization means,

REPLACEMENT SHEET

0 5 MAR 1997

* C L M S *

and said supporting gas cushions pressurized at sufficient pressure to support a majority of boat weight, characterized by said catamaran-like sidehulls having recesses in their undersides for restraining at least part of said pressurized supporting gas cushions, substantially rigid seal members disposed, at least partially, proximal said catamaran-like sidehull recesses and said substantially rigid seal members' undersides, when viewed in at least one vertical transverse plane of the boat, contain surfaces that are angled to horizontal over a majority of said seal members' width, and wherein at least one of said catamaran-like sidehull recesses enlarges going aft from its forward portions.

82. The boat of claim 81, characterized in that at least one of said catamaran-like sidehull recesses enlarges by one or more step-like enlargements.

83. The boat of claim 81 or 82, characterized in that said catamaran-like sidehull recess, after enlarging, then becomes more constant in width over at least part of its aft portions.

84. The boat of claim 81, 82 or 83, characterized in that said substantially rigid seal member, as seen in a vertical transverse plane of the boat, extends over a majority of catamaran-like sidehull recess width.

85. The boat of any of claims 81 to 84, characterized in that said substantially rigid seal member comprises, at least in part, lower sealing surfaces that are substantially more horizontal, as viewed in a vertical transverse plane of the boat, than said substantially rigid seal member's surfaces proximal to and forward of said lower sealing surfaces.

86. The boat of any of claims 81 to 85, characterized by a step inset into lower sealing surfaces of the substantially rigid seal member thereby reducing a wetted area of said substantially rigid seal member.

REPLACEMENT SHEET

05 MAR 1997

87. The boat of claim 86, characterized by means to supply pressurized gas to said step inset into the lower sealing surfaces of the rigid seal member.

88. The boat of any claim 81 to 87, characterized in that at least one of the substantially rigid seal members, as seen in a vertical transverse plane of the boat, has an inverted-V shape.

89. The boat of any of claims 81 to 88, characterized by vertically oriented vented steps in a side surface of at least one of said catamaran-like sidehulls.

90. The boat of any of claims 81 to 89, characterized by a center bow in mechanical communication with said connecting hull structure.

91. The boat of any of claims 81 to 90, characterized by a first and a second recess in each of the catamaran-like sidehulls, said first and second recesses, at least in part, separated by recess seal members.

92. The boat of claim 91, characterized in that the gas pressurization means is capable of supplying gas at different pressures to the first and the second recesses.

93. The boat of any of claims 81 to 92, characterized in that the substantially rigid seal member's underside, when viewed in at least one vertical transverse plane of the boat, contains surfaces that are biased to one side of a vertical centerline plane of the catamaran-like sidehull.

94. The boat of any of claims 81 to 93, characterized by a movable seal with said movable seal positioned proximal an aft end of the catamaran-like sidehull's recess.

95. A boat having supporting gas cushions disposed in catamaran-like sidehulls with said catamaran-like sidehulls in mechanical communication with

REPLACEMENT SHEET

05 MAR 1997

connecting hull structure, said supporting gas cushions supplied with pressurized gas by gas pressurization means, and said supporting gas cushions pressurized at sufficient pressure to support a majority of boat weight, characterized by a first and a second recess capable of restraining at least portions of the catamaran-like sidehull's supporting gas cushions in each of the catamaran-like sidehulls, said first and second recesses in each of the catamaran-like sidehulls can be supplied with gases at different pressures by the gas pressurization means to thereby aid in controlling boat motions and one of said recesses in each catamaran-like sidehull enlarges going aft from forward portions of said recesses.

96. The boat of claim 95, characterized in that the gas pressurization means comprises a separate gas pressure supply source for the first and for the second recess.

97. The boat of claim 94 or 95, characterized in that the gas pressurization means further comprises a controller that directs a supply of gas to the first and the second recess with said controller receiving as inputs boat orientation readings.

98. The boat of claim 94, 95 or 96, characterized in that the gas pressurization means further comprises a controller that directs a supply of gas to the first and the second recess with said controller receiving as inputs values of pressures in the first and the second recess.

99. The boat of any of claims 95 to 98, characterized in that the gas pressurization means further comprises an interconnecting duct and valve that connects a recess in one sidehull with a recess in another sidehull.

100. A boat having supporting gas cushions disposed in catamaran-like sidehulls with said catamaran-like sidehulls in mechanical communication with

REPLACEMENT SHEET
05 MAR 1997

* C L M S *

connecting hull structure, said supporting gas cushions supplied with pressurized gas by gas pressurization means, and said supporting gas cushions pressurized at sufficient pressure to support a majority of boat weight, characterized by said catamaran-like sidehulls having recesses in their undersides for restraining at least part of said pressurized supporting gas cushions and wherein at least one of said catamaran-like sidehull recesses enlarges going aft from its forward portions, and vertically oriented vented steps in side surfaces of the catamaran-like sidehulls, said side surfaces of the catamaran-like sidehulls, as viewed in a horizontal plane of said boat, are at least in part closer to a vertical centerline plane of said sidehulls over aft portions than more forward portions of said catamaran-like sidehulls.

101. The boat of claim 100, characterized in that said vertically oriented vented steps are, at least in part, more forward at their upper portions than their lower portions.

102. The boat of claim 100 or 101, characterized in that a chine of the catamaran-like sidehull is disposed, at least partially, further from a vertical centerline plane of said catamaran-like sidehull than the vertically oriented vented steps of said catamaran-like sidehull.

103. A boat having supporting gas cushions disposed in catamaran-like sidehulls with said catamaran-like sidehulls in mechanical communication with connecting hull structure, said supporting gas cushions supplied with pressurized gas by gas pressurization means, and said supporting gas cushions pressurized at sufficient pressure to support a majority of boat weight, characterized by a recess in each catamaran-like sidehull with said recesses at least partially restraining the pressurized gas cushions, each of said catamaran-like sidehulls having inner and outer sidewalls with said outer

REPLACEMENT SHEET
05 MAR 1997

* C L M S *

sidewalls being, on average, substantially lower than the inner sidewalls when the boat is running level, as seen in at least one vertical transverse plane of the boat, and at speeds of more than 25 knots.

104. The boat of claim 103, characterized in that the catamaran-like sidehull's inner sidewalls are, on average, substantially narrower than the catamaran-like sidehull's outer sidewalls.

105. The boat of claim 104, characterized in that catamaran-like sidehull's inner sidewalls are, on average, less than half the width of the catamaran-like sidehull's outer sidewalls.

106. The boat of claim 103, 104 or 105, characterized in that the catamaran-like sidehull's outer sidewalls have lower surfaces that are comprised of angled surfaces forward and more rounded surfaces aft.

107. The boat of any of claims 103 to 106, characterized in that said catamaran-like sidehulls have substantially more narrow bows than aft sections.

108. The boat of any claims 103 to 107, characterized in that at least one of said sidehull's sidewalls, at least in part, diverges going aft from a catamaran-like sidehull's bow toward the stern of the boat.

109. The boat of claim 108, characterized in that the sidehull's sidewall, after diverging, becomes substantially parallel to a vertical centerline plane of the boat.

110. The boat of any of claims 103 to 109, characterized in that the catamaran-like sidehulls are asymmetrical when viewed in a calm seal surface waterline plane of said boat.

111. The boat of any of claims 103 to 110, characterized in that the catamaran-like sidehulls extend substantially more forward than a forward part of the connecting hull structure.

REPLACEMENT SHEET
05 MAR 1997

* C L M S *

112. The boat of any of claims 103 to 111, characterized in that a center bow in mechanical communication with said connecting hull structure.

113. The boat of any of claims 103 to 112, characterized by at least one substantially rigid seal member disposed, at least in partially, proximal one of said catamaran-like sidehull's recesses and said substantially rigid seal member's underside, when viewed in at least one vertical transverse plane of the boat, contains surfaces that are angled to horizontal over a majority of said seal member's width.

114. The boat of any claims 103 to 113, characterized by an intermediate movable seal that is at least partially disposed proximal a catamaran-like sidehull recess with said intermediate movable seal in mechanical communication with and movable in relation to the boat.

115. The boat of any of claims 103 to 114, characterized by a second supporting gas cushion in each of the catamaran-like sidehulls, said gas cushions, at least in part, separated by at least one seal member, and wherein the gas pressurization means is capable of supplying gas at different pressures to the separate gas cushions in one of the catamaran-like sidehulls.

116. A boat having supporting gas cushions disposed in catamaran-like sidehulls with said catamaran-like sidehulls in mechanical communication with connecting hull structure, said supporting gas cushions supplied with pressurized gas by gas pressurization means, and said supporting gas cushions pressurized at sufficient pressure to support a majority of boat weight, characterized by a recess in each catamaran-like sidehull with said recesses at least partially restraining the pressurized gas cushions, each of said catamaran-like sidehulls having inner and outer sidewalls with said inner sidewalls being, on average, substantially narrower than the catamaran-like sidehull's outer sidewalls.

REPLACEMENT SHEET

05 MAR 1997

* C L M S *

117. The boat of claim 116, characterized in that the catamaran-like sidehull's inner sidewalls are, on average, less than half the width of the catamaran-like sidehull's outer sidewalls.

118. The boat of claim 116 or 117, characterized in that the catamaran-like sidehull's outer sidewalls are, on average, substantially lower than the inner sidewalls when the boat is running level and at speeds of more than 25 knots.

119. The boat of claims 116, 117 or 118, characterized in that the catamaran-like sidehull's outer sidewalls have lower surfaces that are comprised of angled surfaces forward and more rounded surfaces aft.

120. The boat of any of claims 116 to 119, characterized in that said catamaran-like sidehulls have substantially more narrow bows than aft sections.

121. The boat of any of claims 116 to 120, characterized in that at least one of said sidehull's sidewalls, at least in part, diverges going aft from a catamaran-like sidehull's bow toward the stern of the boat.

122. The boat of claim 121, characterized in that the sidehull's sidewall, after diverging, becomes substantially parallel to a vertical centerline plane of the boat.

123. The boat of any of claims 116 to 122, characterized in that the catamaran-like sidehulls are asymmetrical when viewed in a calm sea surface waterline plane of said boat.

124. The boat of any of claims 116 to 123, characterized in that the catamaran-like sidehulls extend substantially more forward than a forward part of the connecting hull structure.

125. The boat of any of claims 116 to 124, characterized by a center bow in mechanical communication with said connecting hull structure.

126. The boat of any of claims 116 to 125, characterized by at least one substantially rigid seal

REPLACEMENT SHEET
05 MAR 1997

member disposed, at least partially, proximal one of said catamaran-like sidehull's recesses and said substantially rigid seal member's underside, when viewed in at least one vertical transverse plane of the boat, contains surfaces that are angled to horizontal over a majority of said seal member's width.

127. The boat of any of claims 116 to 126, characterized by an intermediate movable seal that is at least partially disposed proximal a catamaran-like sidehull recess with said intermediate movable seal in mechanical communication with and movable in relation to the boat.

128. The boat of any of claims 116 to 127, characterized by a second supporting gas cushion in each of the catamaran-like sidehulls, said gas cushions, at least in part, separated by at least one seal member, and wherein the gas pressurization means is capable of supplying gas at different pressures to the separate gas cushions in one of the catamaran-like sidehulls.

129. A boat having supporting gas cushions disposed in catamaran-like sidehulls with said catamaran-like sidehulls in mechanical communication with connecting hull structure, said supporting gas cushions supplied with pressurized gas by gas pressurization means, and said supporting gas cushions pressurized at sufficient pressure to support a majority of boat weight, characterized by a recess in each catamaran-like sidehull with said recesses at least partially restraining the pressurized gas cushions, an intermediate movable seal that is at least partially disposed proximal one of the catamaran-like sidehull recesses with said intermediate movable seal in mechanical communication with and movable in relation to the boat, a second supporting gas cushion in the catamaran-like sidehull with the intermediate movable seal, said gas cushions, at least in part, separated by the intermediate movable seal, and wherein

REPLACEMENT SHEET
05 MAR 1997

* C L M S *

the gas pressurization means is capable of supplying gas at different pressures to the separate gas cushions in the catamaran-like sidehull.

130. The boat of claim 129, characterized in that the intermediate movable seal is in mechanical communication with a force means that applies a downward force to the intermediate movable seal.

131. The boat of claim 129 or 130, characterized in that the force means is, at least in part, resilient.

132. The boat of claim 129, 130 or 131, characterized in that the intermediate movable seal is comprised of multiple separate elements.

133. The boat of any of claims 129 to 132, characterized in that the intermediate movable seal is attached to the boat by a hinge-like mechanism.

134. The boat of any of claims 129 to 133, characterized in that said catamaran-like sidehulls have substantially more narrow bows than aft sections.

135. The boat of any of claims 129 to 134, characterized by at least one substantially rigid seal member disposed, at least partially, proximal one of said catamaran-like sidehull's recesses and said substantially rigid seal member's underside, when viewed in at least one vertical transverse plane of the boat, contains surfaces that are angled to horizontal over a majority of said seal member's width.

136. A boat having supporting gas cushions disposed in catamaran-like sidehulls with said catamaran-like sidehulls in mechanical communication with connecting hull structure, and with said supporting gas cushions supplied with pressurized gas by gas pressurization means, characterized by a recess in each catamaran-like sidehull with said recesses at least partially restraining the pressurized gas cushions, each of said catamaran-like sidehulls having inner and outer sidewalls, with the recess in at least one of said

REPLACEMENT SHEET
05 MAR 1997

* C L M S *

catamaran-like sidehulls, as seen in a horizontal water contacting plane of said boat, enlarging in width over at least a portion of its longitudinal length going aft from its forward portions when said boat is operating at speeds of over 25 knots in a calm sea with its gas cushions pressurized to a sufficient pressure to support a majority of boat weight, and wherein at least one of said recesses is, at least partially, asymmetrical.

137. The boat of claim 136, characterized in that the recess in one of the catamaran-like sidehulls that is enlarging in width then becomes more constant in width over at least a portion of its longitudinal length.

138. The boat of claim 136 or 137, characterized in that at least one of said sidehull's inner and outer sidewalls have outer water contacting surfaces that are, at least in part, asymmetrical to each other.

139. The boat of any of claims 136 to 138, characterized in that an average height of said recess above a lowest portion of a catamaran-like sidehull keel is less than fifty percent of a distance from the lowest portion of the catamaran-like sidehull keel to a wetdeck of said boat.

140. The boat of any of claims 136 to 139, characterized by a center bow in mechanical communication with said connecting hull structure.

141. The boat of any of claims 136 to 140, characterized by at least one substantially rigid seal member disposed, at least partially, proximal one of said catamaran-like sidehull recesses and said substantially rigid seal member's undersides, when viewed in at least one vertical transverse plane of the boat, contains surfaces that are angled to horizontal over a majority of said seal member's width.

142. The boat of claim 141, characterized in that said substantially rigid seal member is, at least partially, asymmetrical.

REPLACEMENT SHEET
05 MAR 1997

143. The boat of claim 141 or 142, characterized in that said substantially rigid seal member comprises, at least in part, lower sealing surfaces that are substantially more horizontal, as viewed in a vertical transverse plane of the boat, than said substantially rigid seal member's surfaces proximal to and forward of said lower sealing surfaces.

144. The boat of any of claims 136 to 143, characterized by vertically oriented vented steps in a side surface of at least one of said catamaran-like sidehulls.

145. The boat of claim 144, characterized in that at least a part of said side surface of said catamaran-like sidehull in way of said vertically oriented vented steps, as viewed in a horizontal plane of said boat, is narrower over an aft portion than a more forward portion.

146. The boat of any of claims 136 to 145, characterized by a first forward movable seal disposed proximal a forward portion of one of said catamaran-like sidehull recesses where said first forward movable seal is movable in relation to the boat.

147. The boat of any of claims 136 to 146, characterized by an intermediate movable seal that is at least partially disposed proximal a catamaran-like sidehull recess with said intermediate movable seal movable in relation to the boat.

148. The boat of claim 147, characterized in that the intermediate movable seal is in mechanical communication with a force means that applies a downward force to the intermediate movable seal.

149. The boat of claim 148, characterized in that the force means is, at least in part, resilient.

150. The boat of claim 148 or 149, characterized in that the intermediate movable seal is comprised of multiple separate elements.

REPLACEMENT SHEET
05 MAR 1997

* C L M S *

151. The boat of any of claims 136 to 150, characterized by a first and a second recess in each of the catamaran-like sidehulls, said first and second recesses, at least in part, separated by recess seal members.

152. The boat of claim 151, characterized in that the gas pressurization means is capable of supplying gas at different pressures to the first and the second recesses.

153. The boat of any of claims 136 to 152, characterized in that said catamaran-like sidehull's said outer sidewalls are, on average, substantially lower than its inner sidewalls when the boat is running level, when viewed in at least one vertical transverse plane of the boat, and at speeds of more than 25 knots.

154. The boat of any of claims 136 to 153, characterized in that said catamaran-like sidehull's inner sidewalls are, on average, substantially narrower than the catamaran-like sidehull's outer sidewalls.

155. The boat of any of claims 136 to 154, characterized in that said catamaran-like sidehull's said outer sidewalls have lower surfaces that are comprised of angled surfaces forward and more rounded surfaces aft.

REPLACEMENT SHEET
05 MAR 1997

MULTIPLE HULL AIR RIDE BOAT

ABSTRACT

A marine surface vessel (37) that includes pressurized supporting gas cushions in multiple hulls where such pressurized supporting gas cushion support a majority of boat weight in operation. One embodiment of the invention utilizes long fine pointed bow sidehulls (95,96) that are in mechanical communication with a connecting hull structure (99). The vessel (37) also includes a center bow (38) disposed between the sidehulls (95,96) that adds to stability in rough seas. Recesses (58,59,60) in the sidehulls (95,96) include fixed (88-90) and movable seals (51-56). A recess gas pressurization system includes a controller (79) to control pressures in individual recesses (58, 59, 60). A further feature is the use of vertically oriented vented steps (49) in the sides of the sidehulls (95,96) to reduce wetted area drag when operating in rough seas. One other feature is the use of air flow turbulence generators (39) on the underside of the connecting hull structure (79).

FIGURE 2

REPLACEMENT SHEET
05 MAR 1997

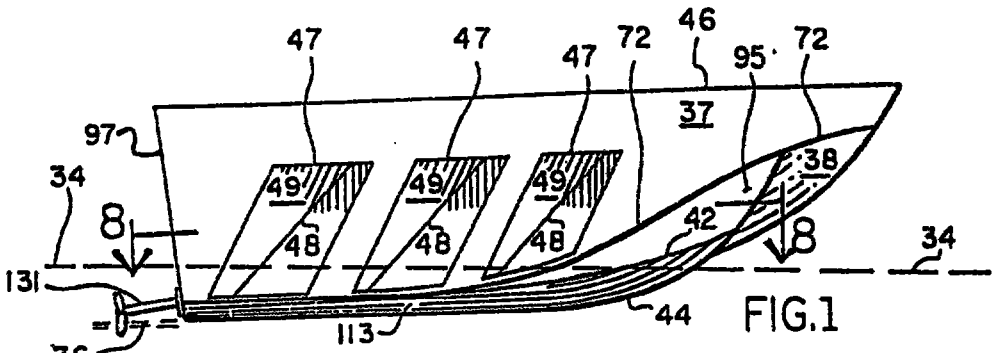

FIG.1

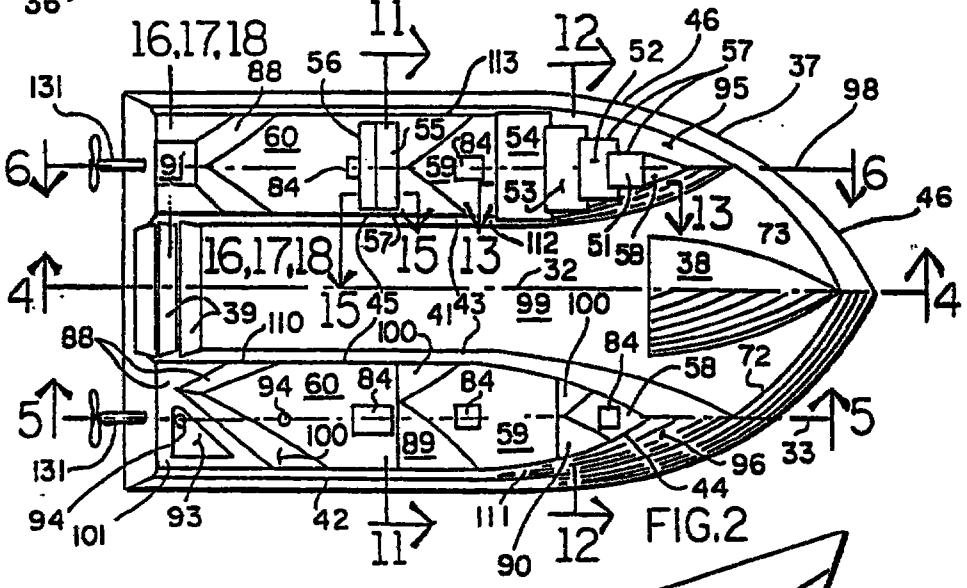

FIG.2

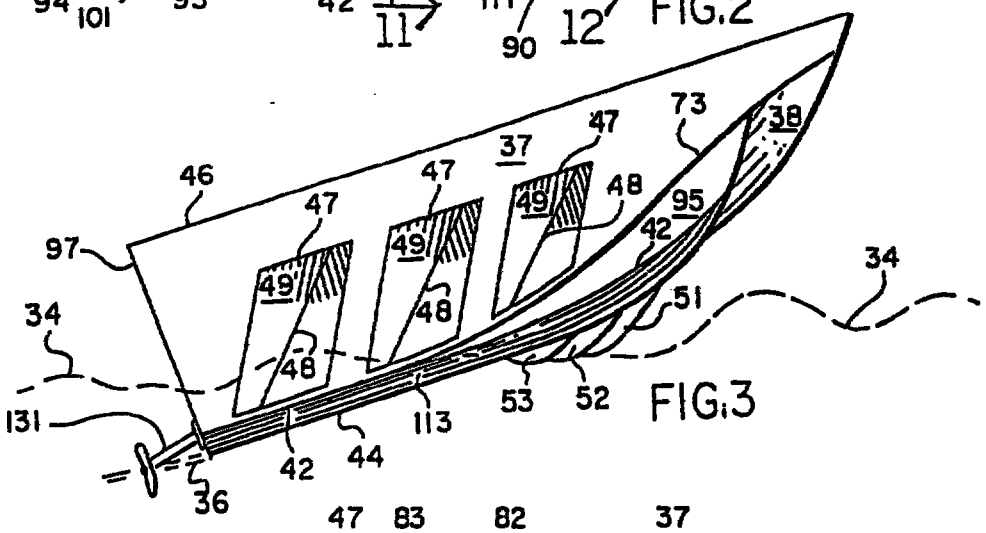

FIG.3

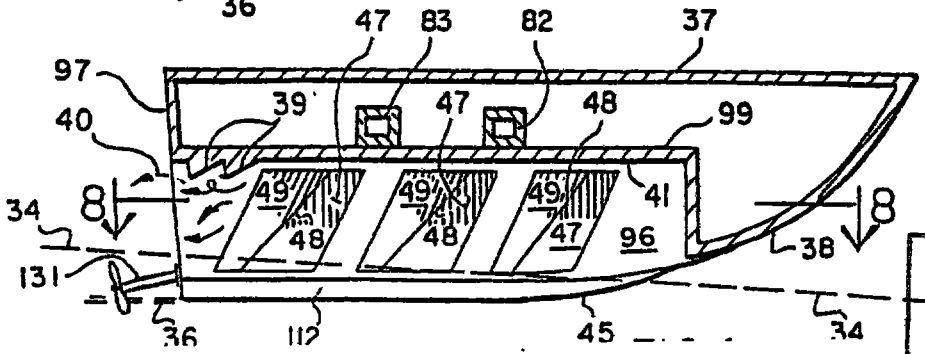

REPLACEMENT SHEET

05 MAR 1997

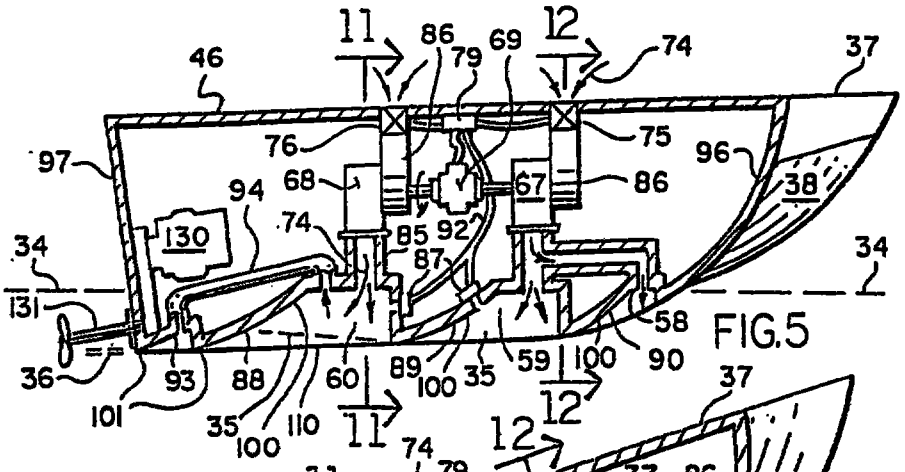

FIG.5

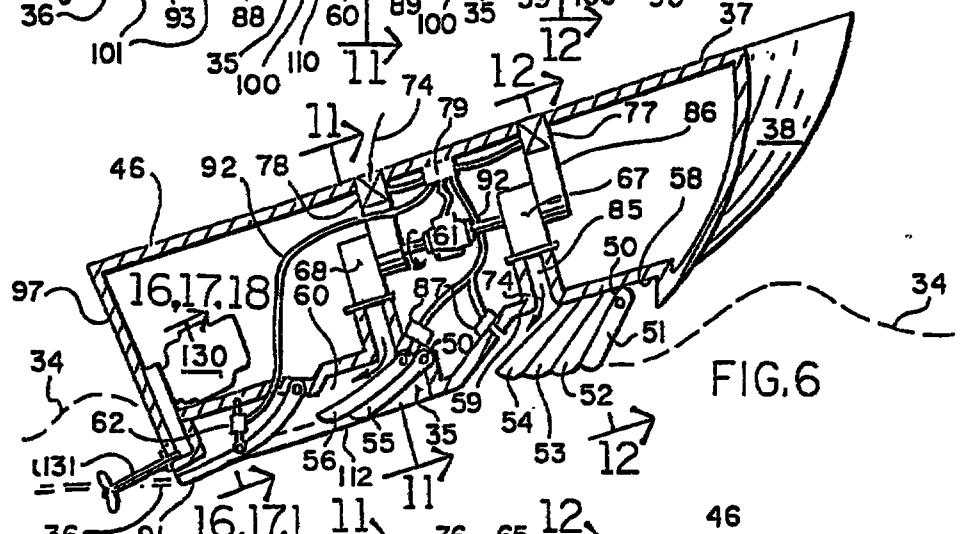

FIG.6

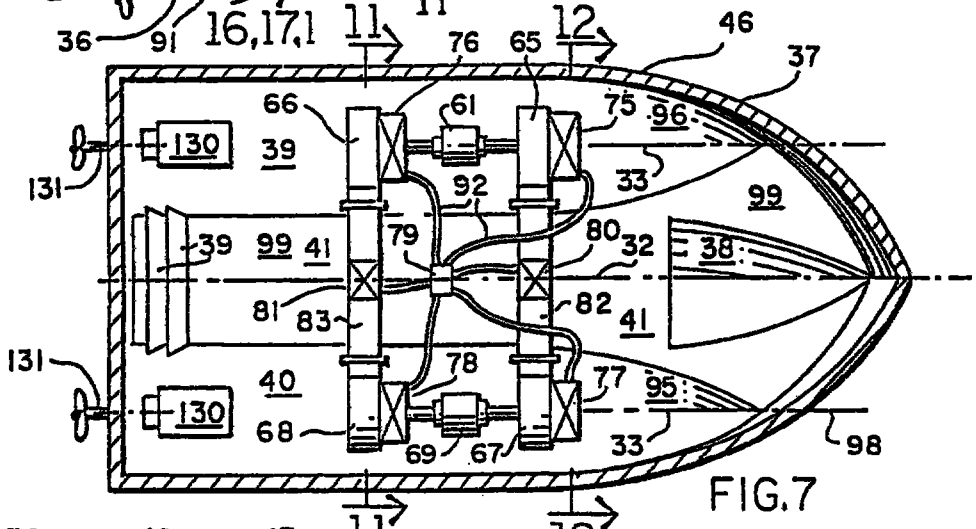

FIG.7

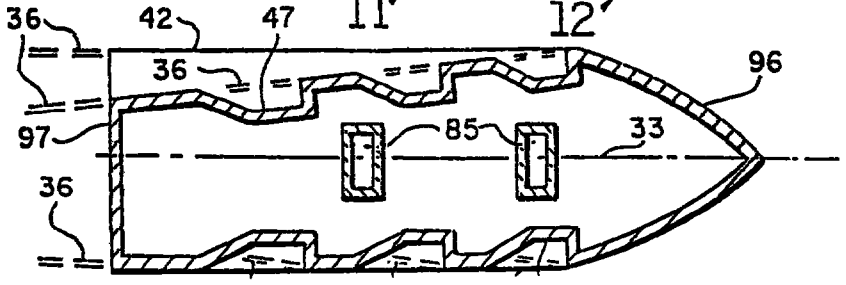

REPLACEMENT SHEET

05 MAR 1997

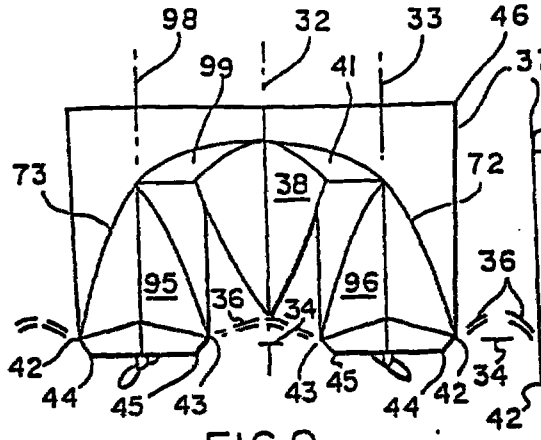

FIG.9

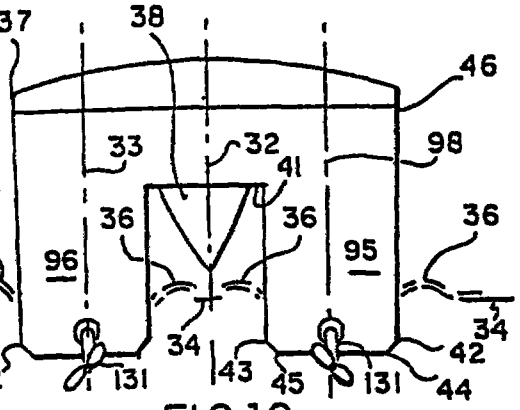

FIG.10

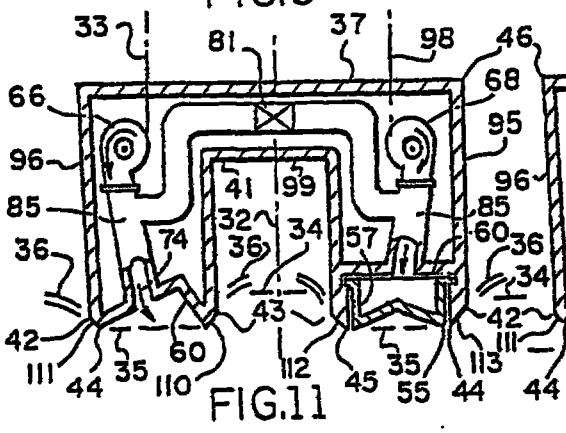

FIG.11

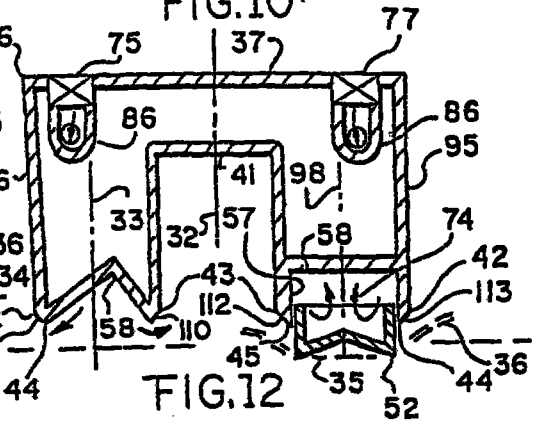

FIG.12

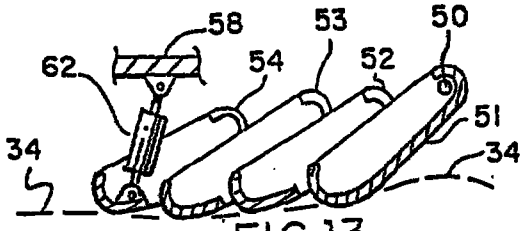

FIG.13

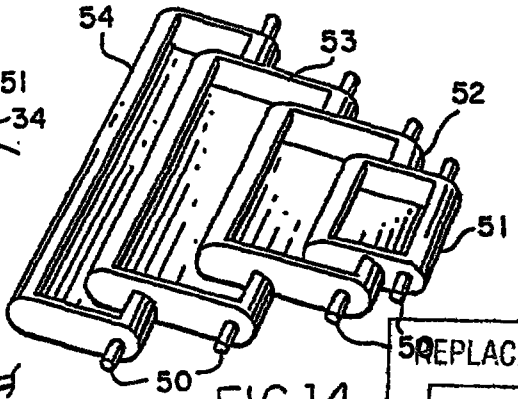

FIG.14

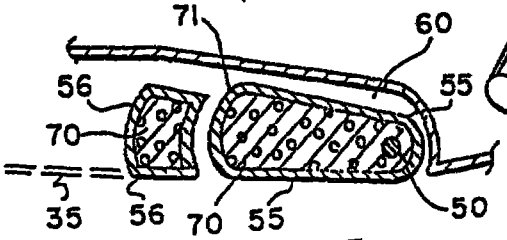

FIG.15

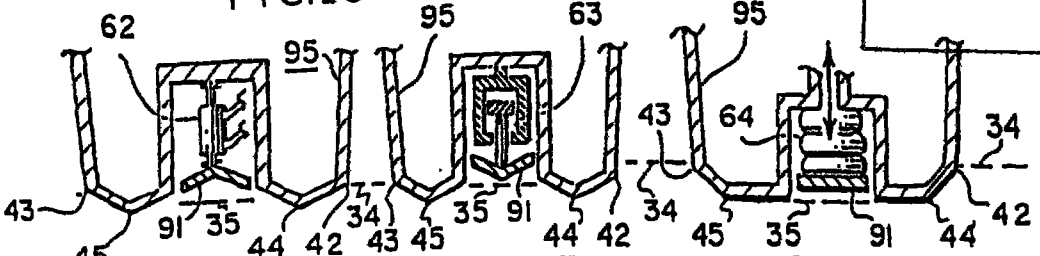

FIG.16 FIG.17 FIG.18

REPLACEMENT SHEET

0 5 MAR 1997

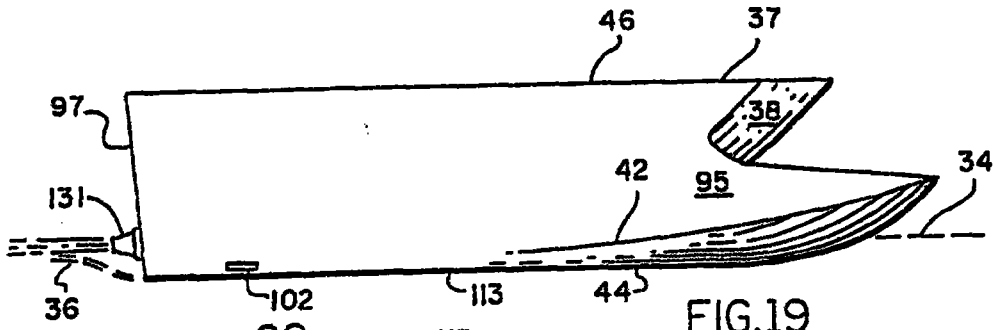

FIG.19

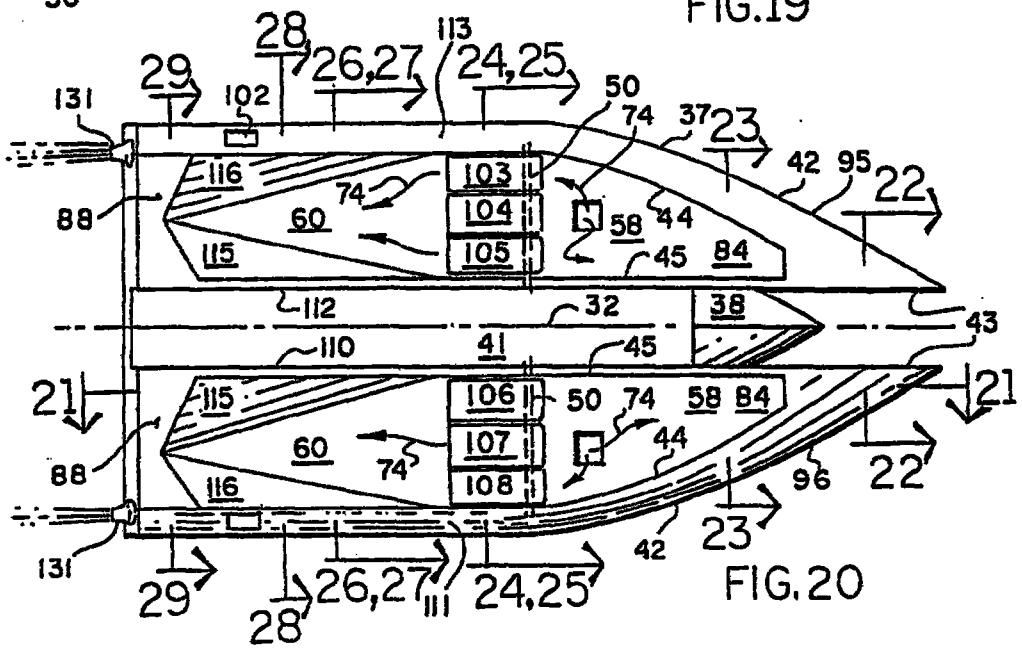

FIG.20

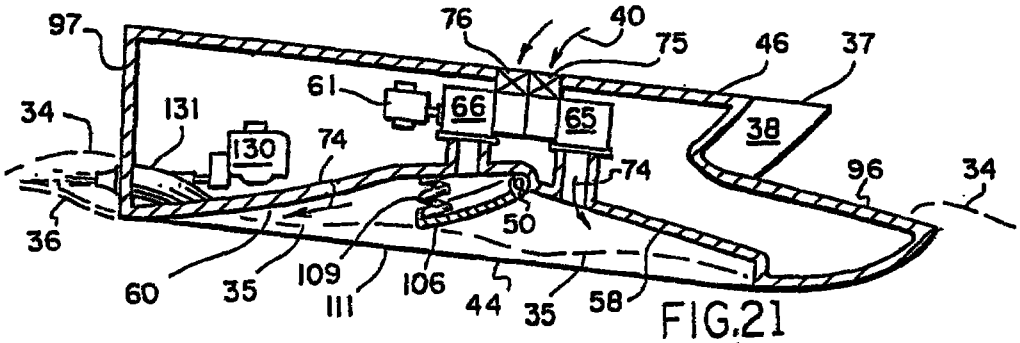

FIG.21

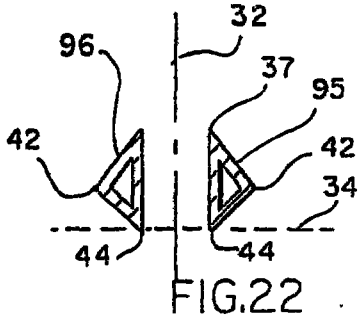

FIG.22

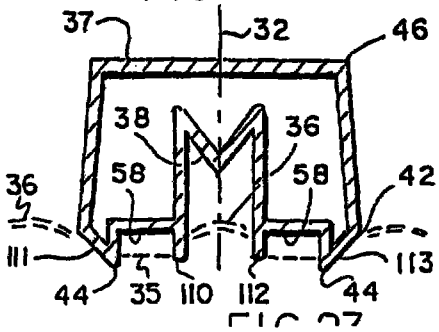

REPLACEMENT SHEET

05 MAR 1997

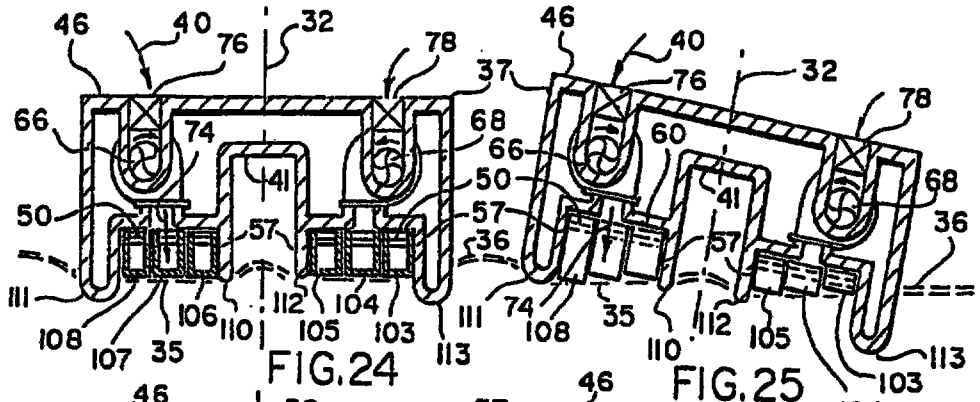

FIG.24

FIG.25

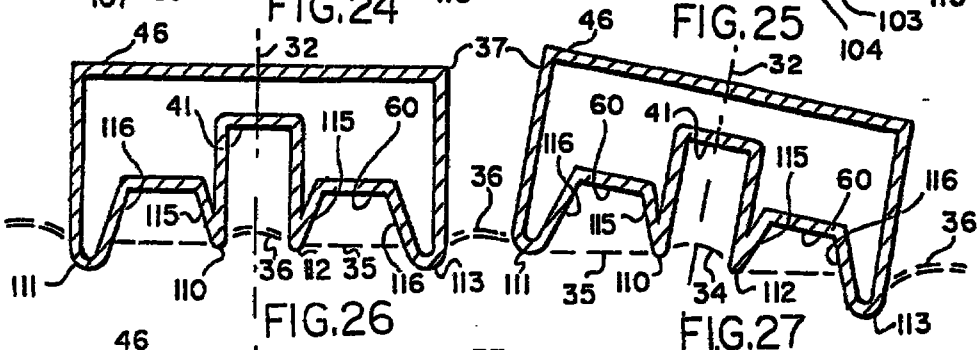

FIG.26

FIG.27

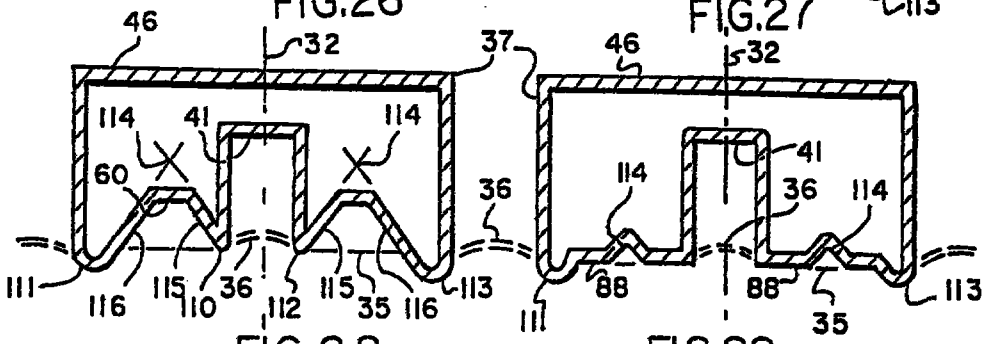

FIG.28

FIG.29

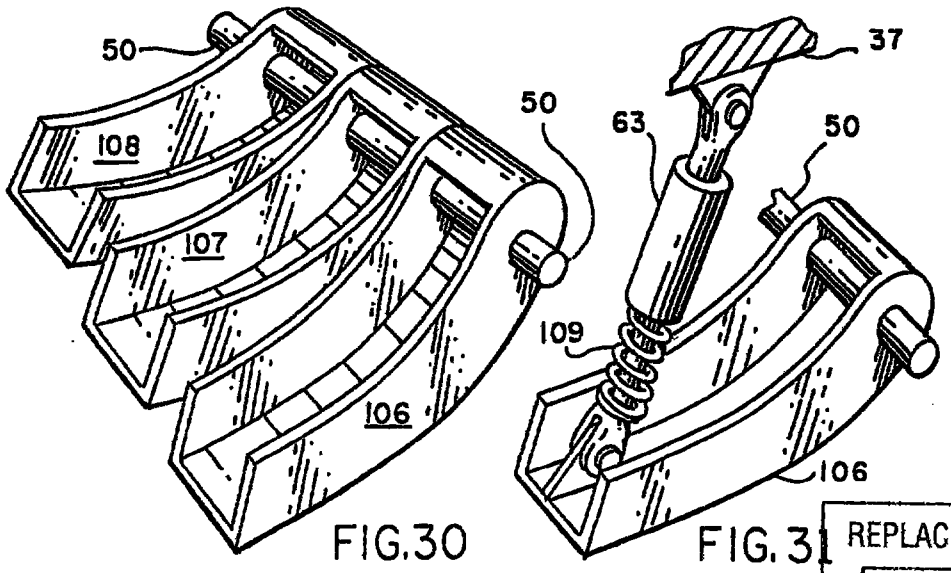

FIG.30

FIG.31

REPLACEMENT SHEET

05 MAR 1997