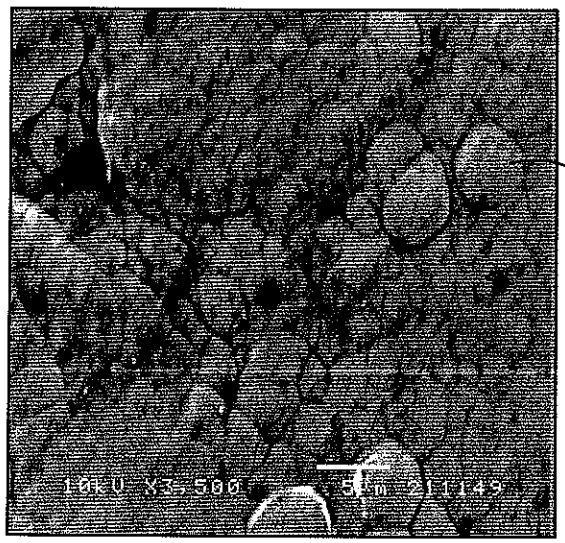

FIG. 1A

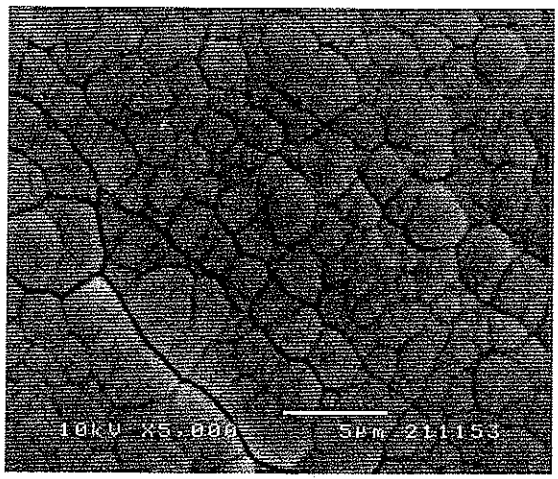

FIG. 1B

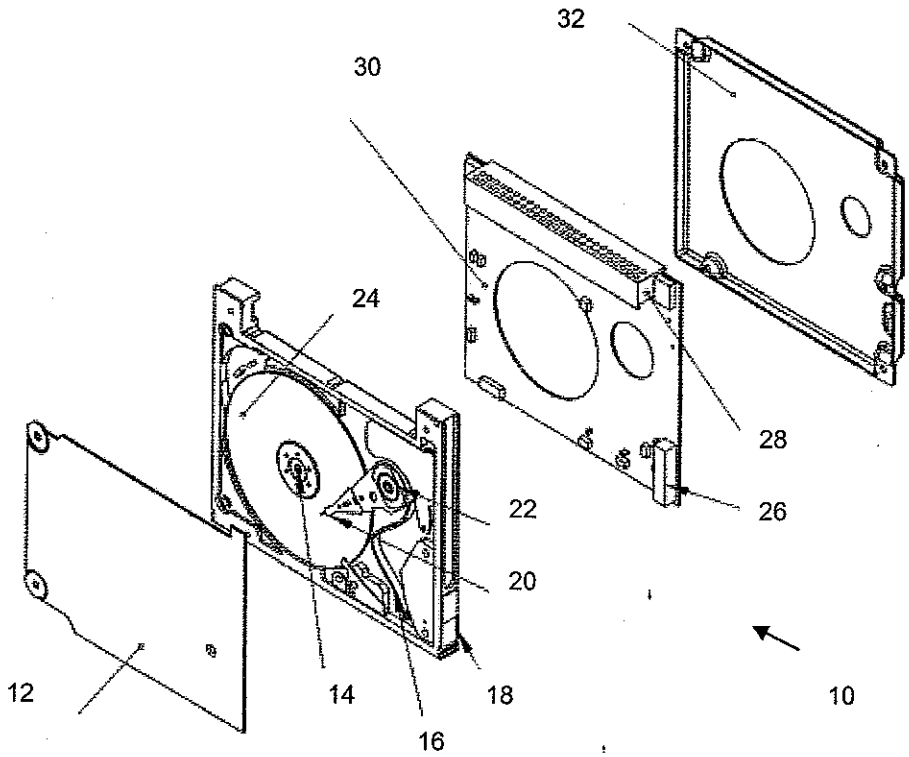

FIG. 3

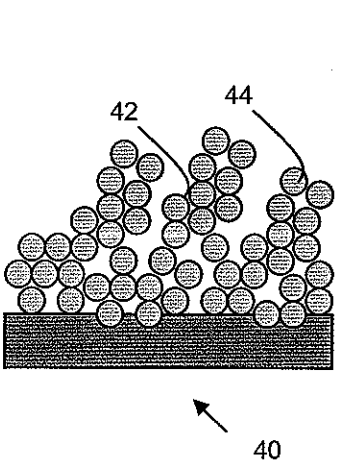

FIG. 2A

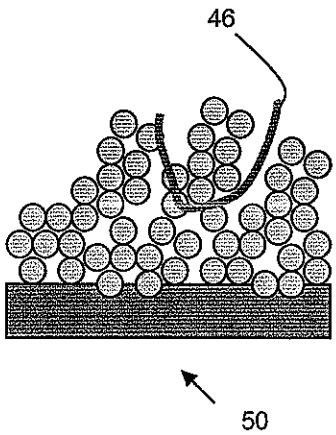

FIG. 2B

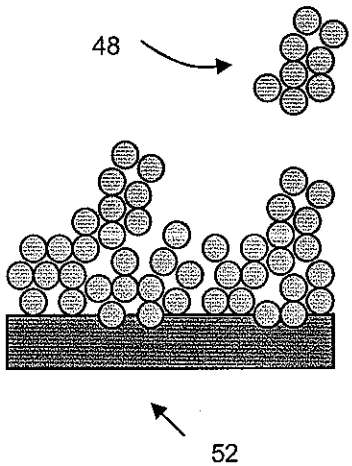

FIG. 2C

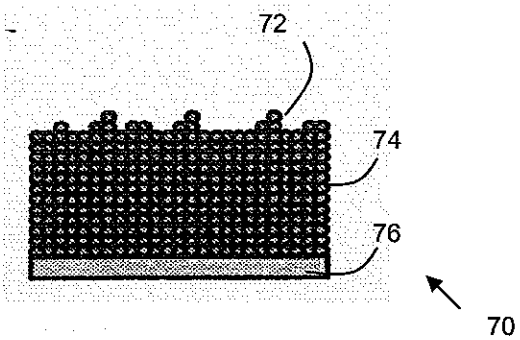

FIG. 5

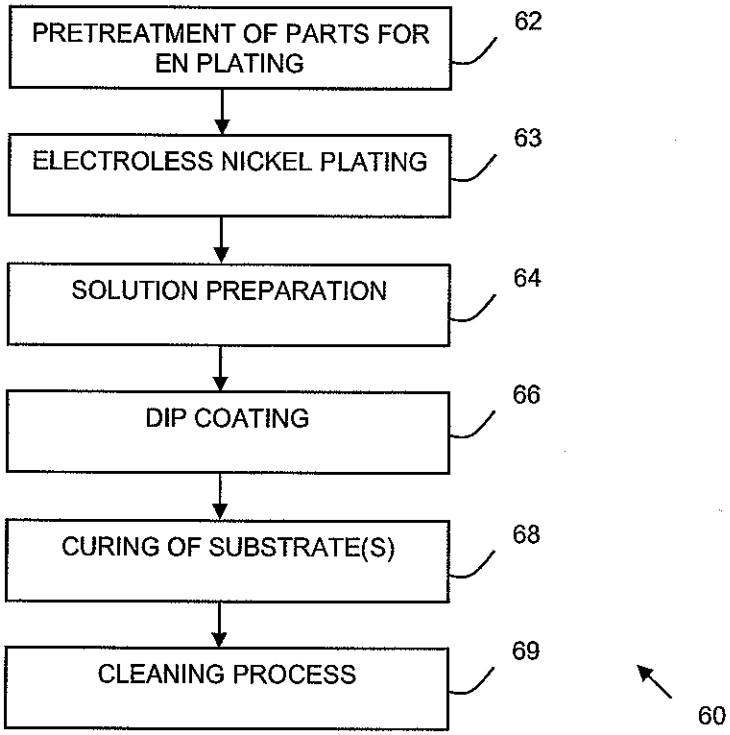
PRETREATMENT OF PARTS FOR EN PLATING
62
ELECTROLESS NICKEL PLATING
63
SOLUTION PREPARATION
64
DIP COATING
66
CURING OF SUBSTRATE(S)
68
CLEANING PROCESS
69
60

FIG. 4

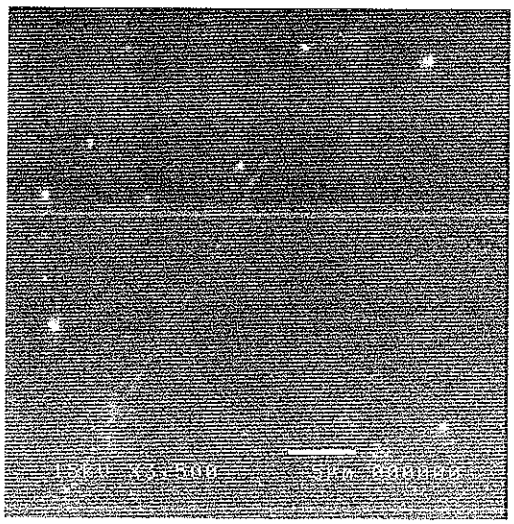

80

FIG. 6A

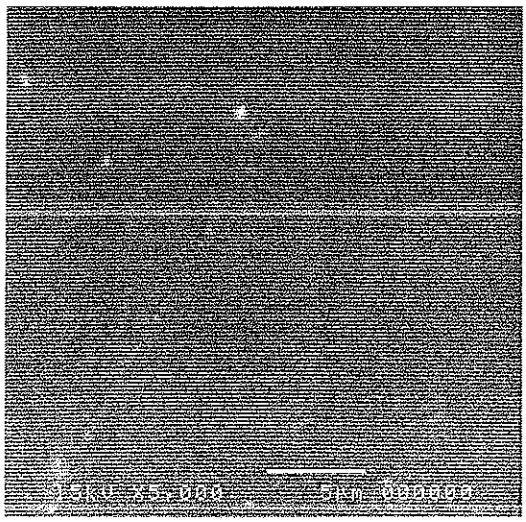

82

FIG. 6B

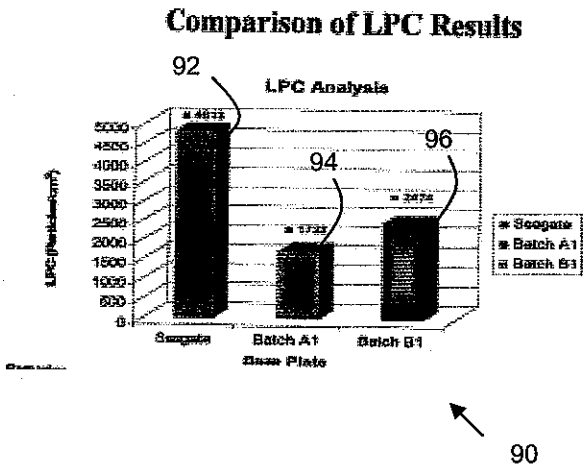

FIG. 7