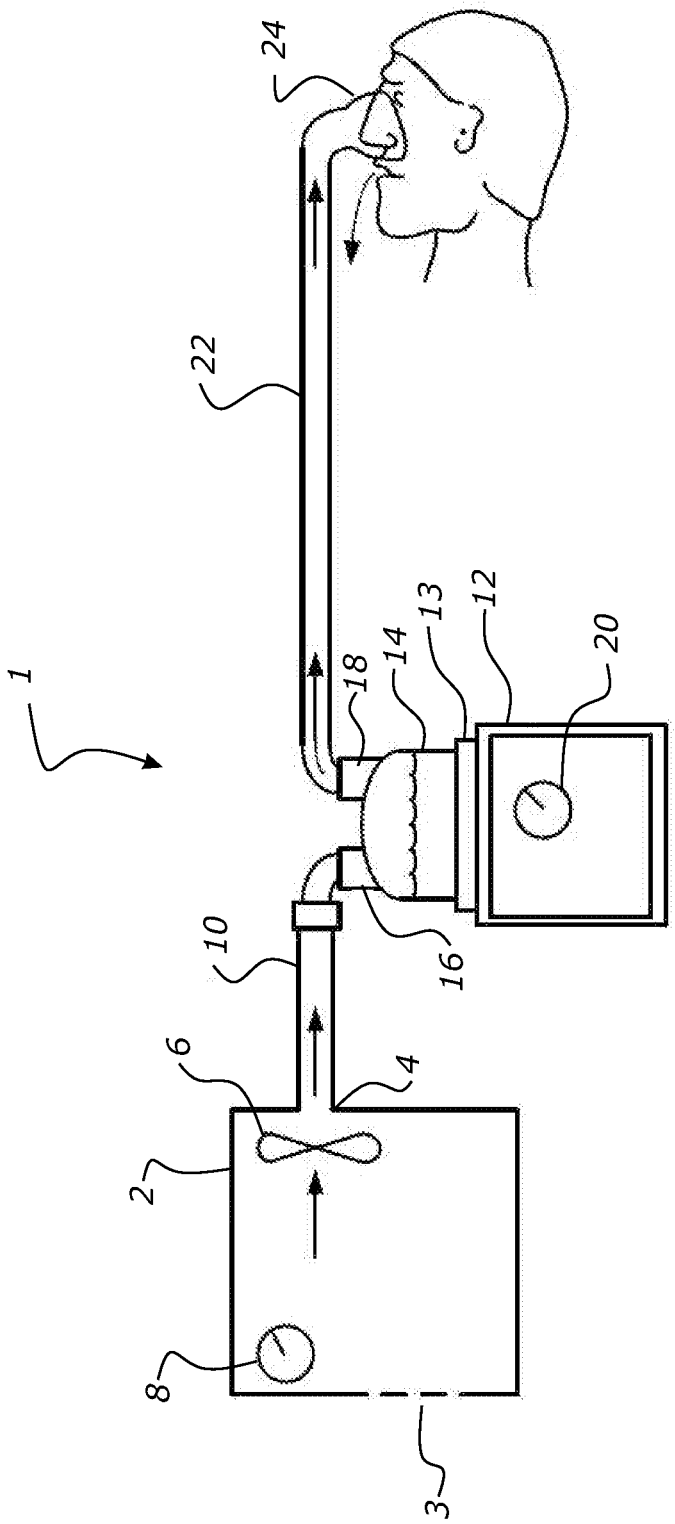

FIGURE 1

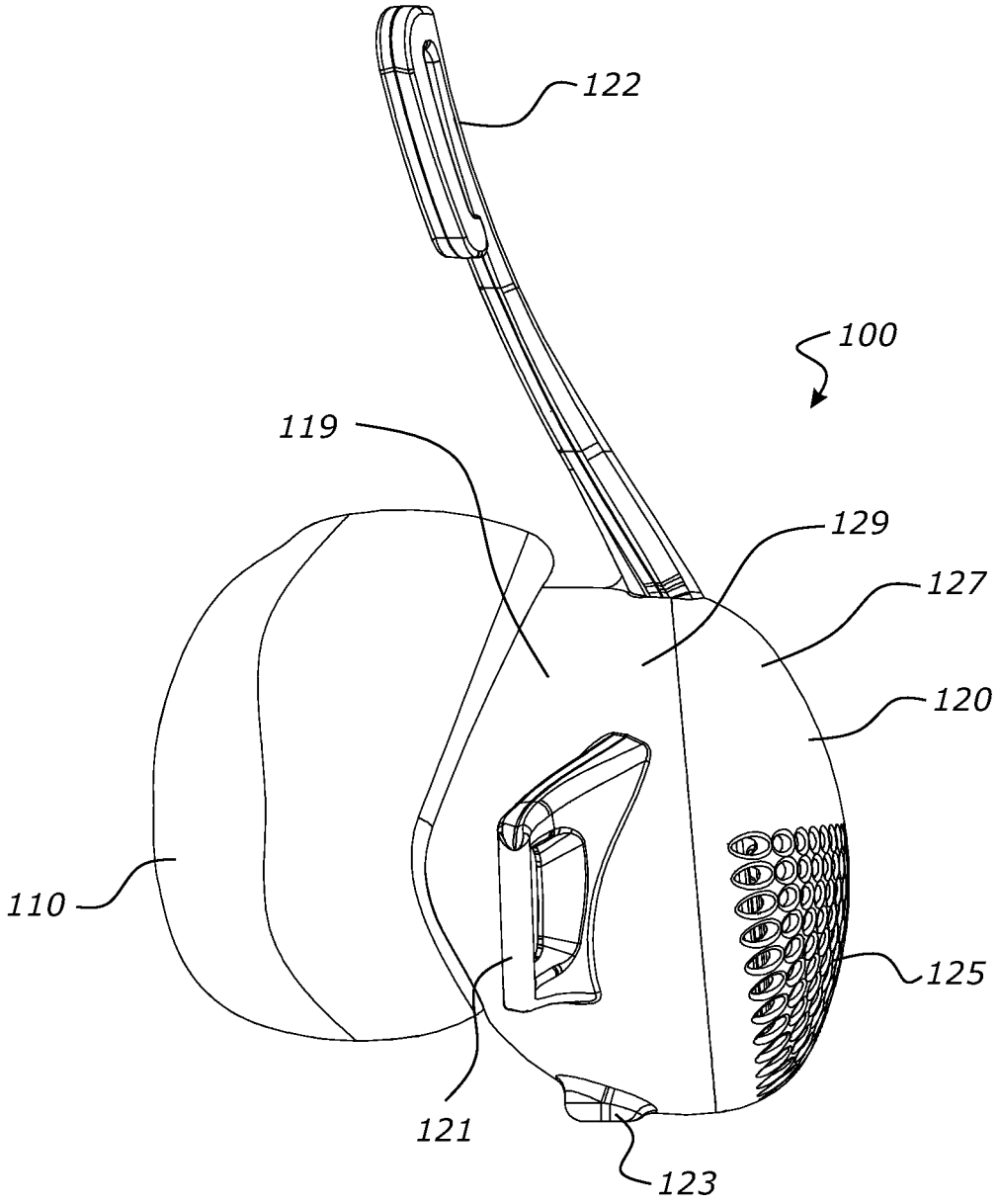

FIGURE 2A

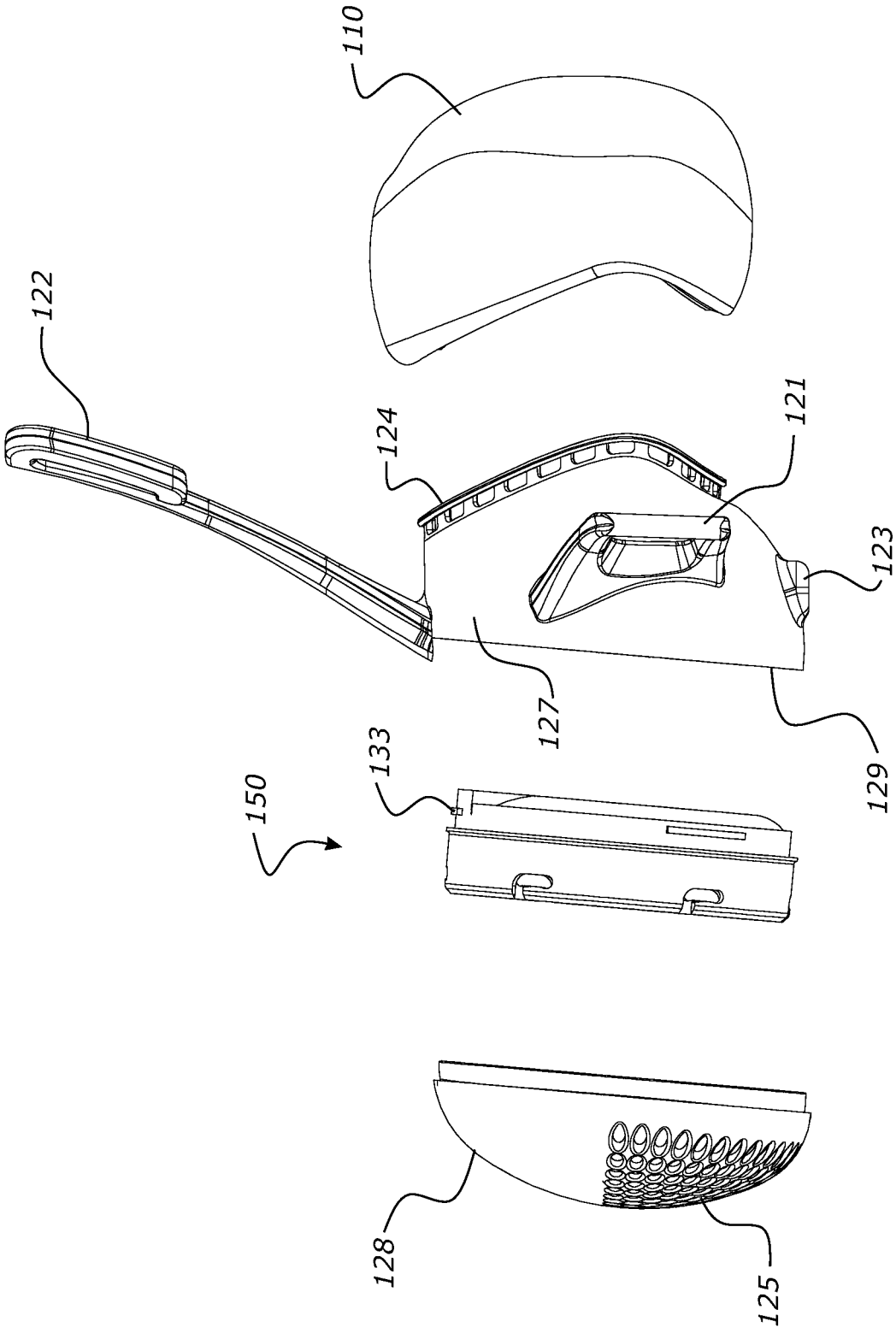

FIGURE 2B

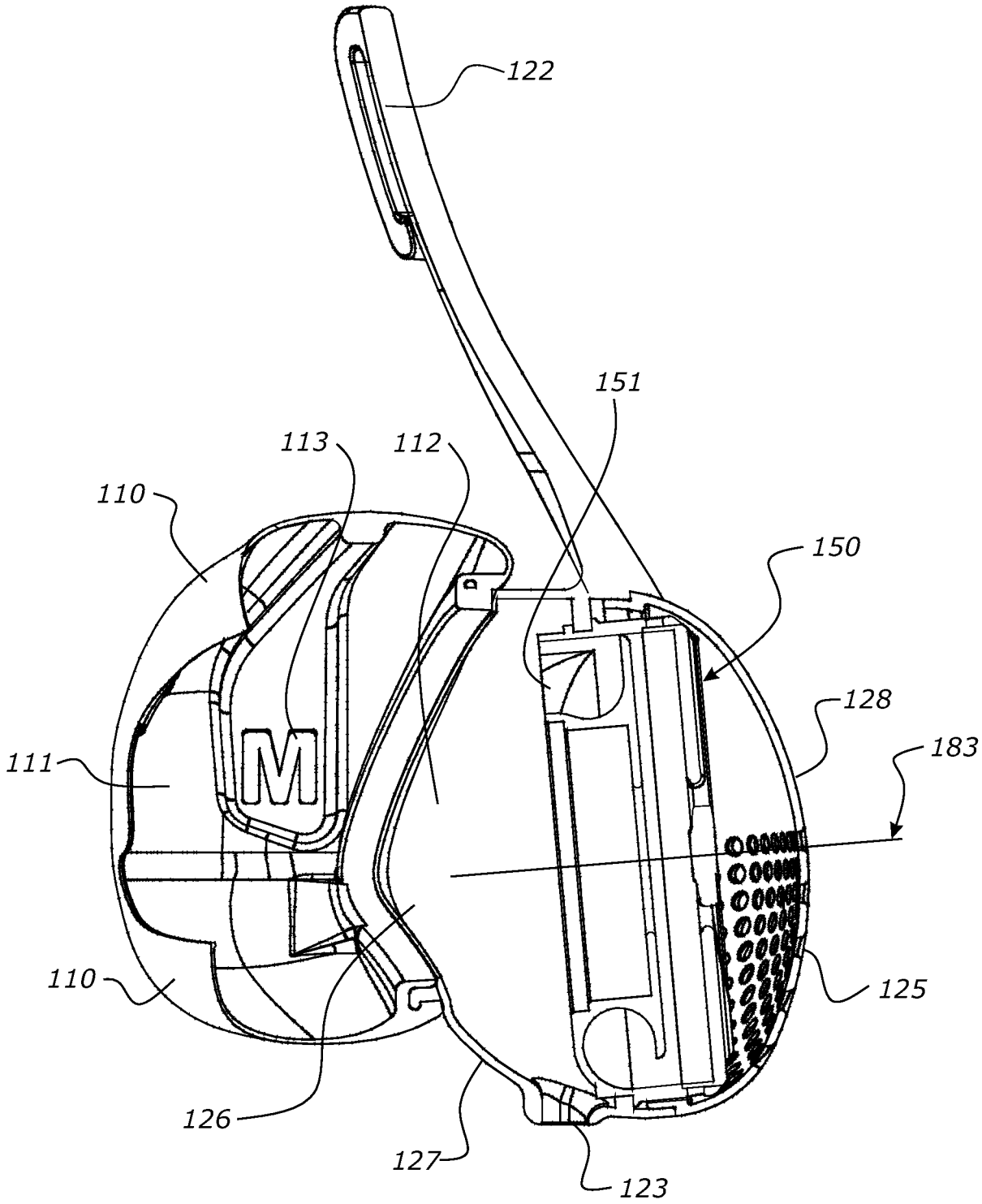

FIGURE 2C

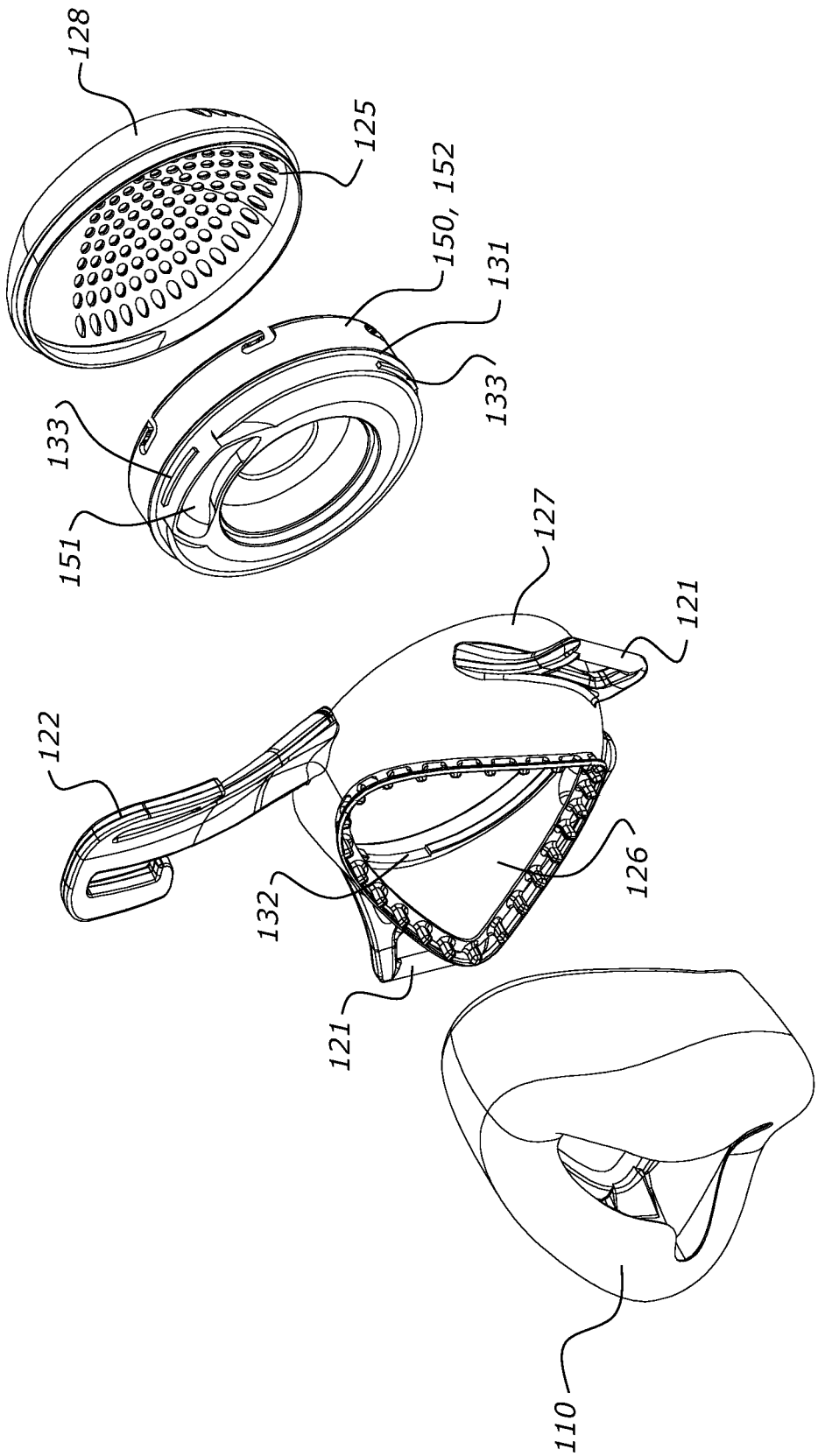

FIGURE 2D

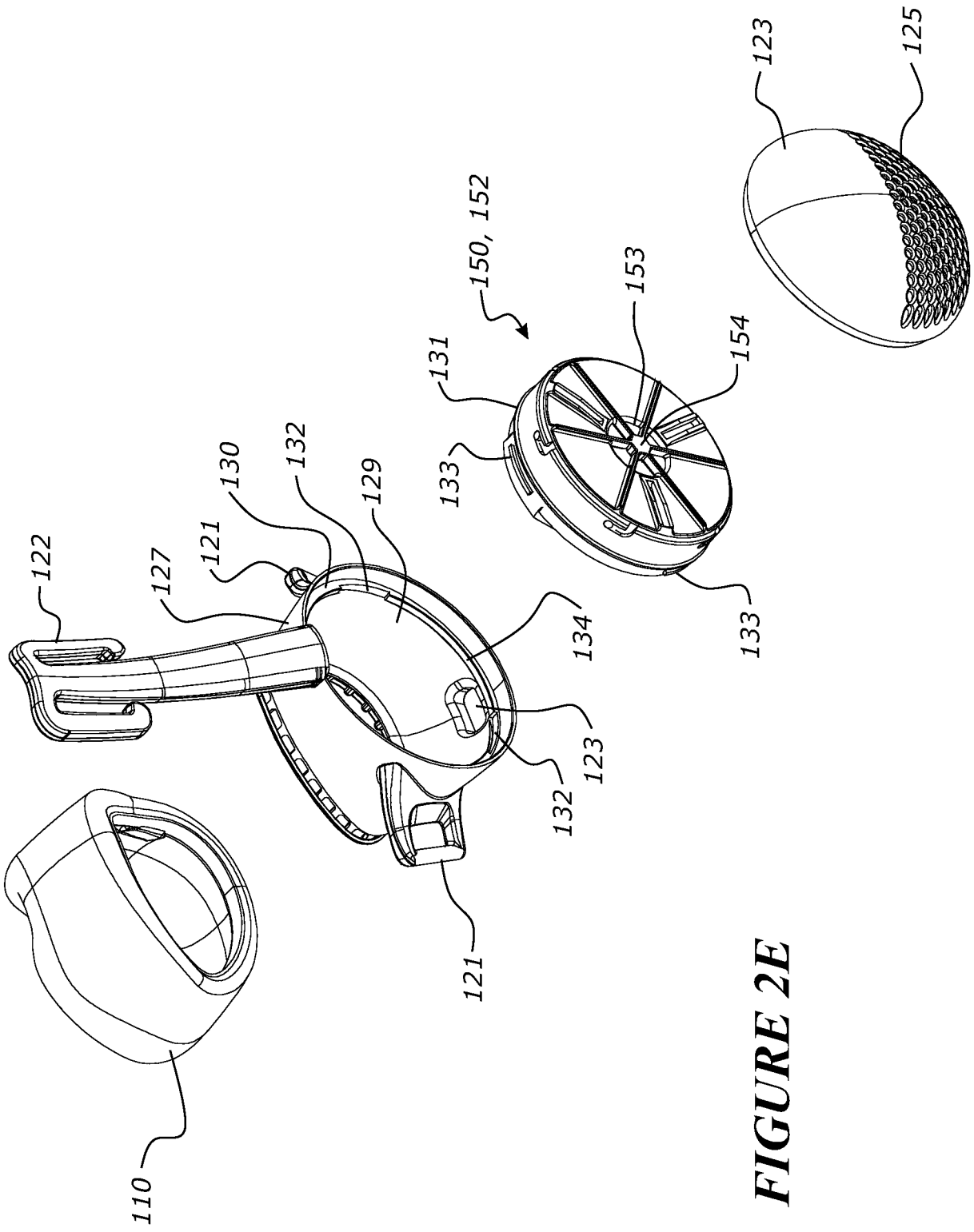
110
122
127
121
130
132
129
131
133
150, 152
153
154
133
134
123
132
121
123
125

FIGURE 2E

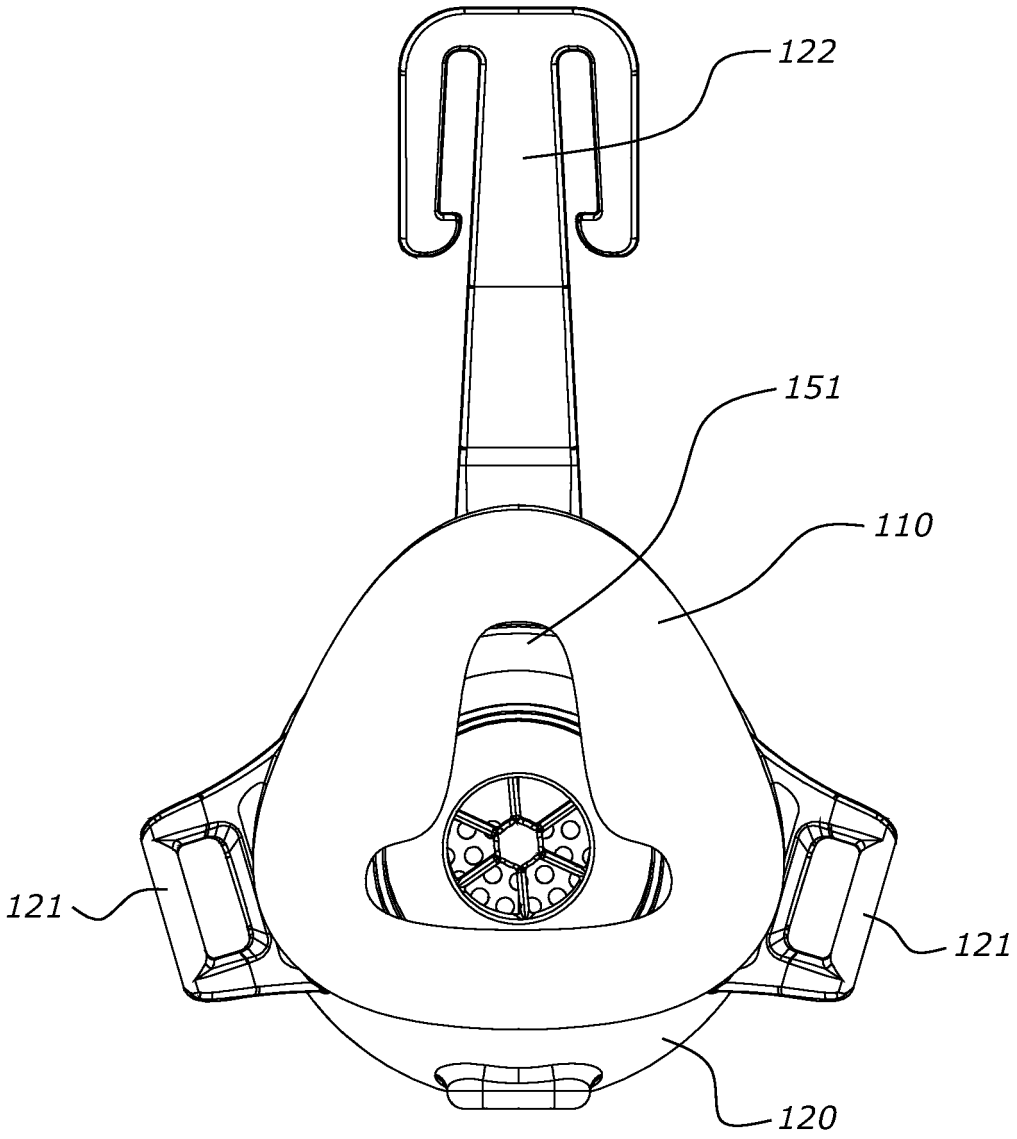

FIGURE 2F

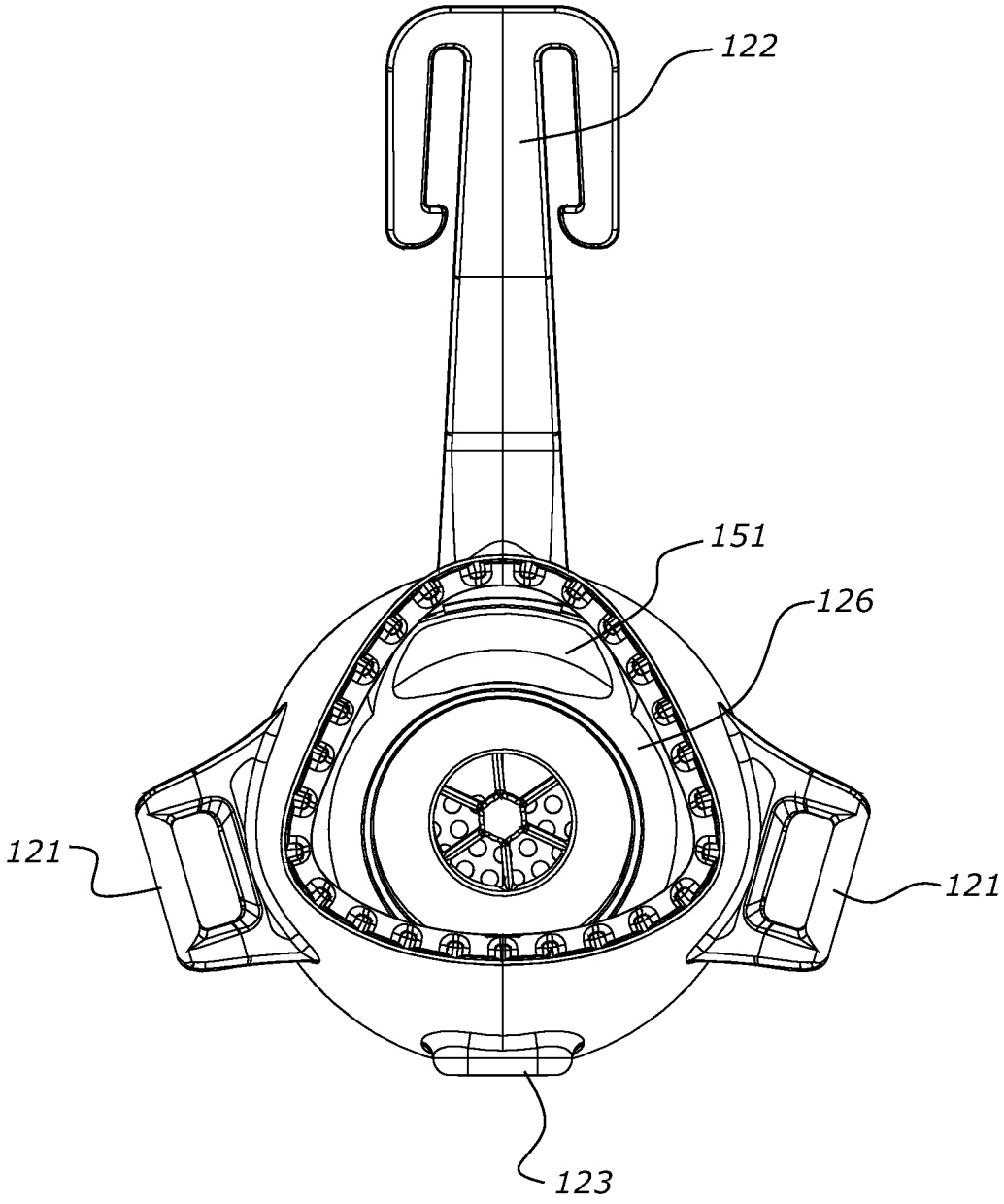

FIGURE 2G

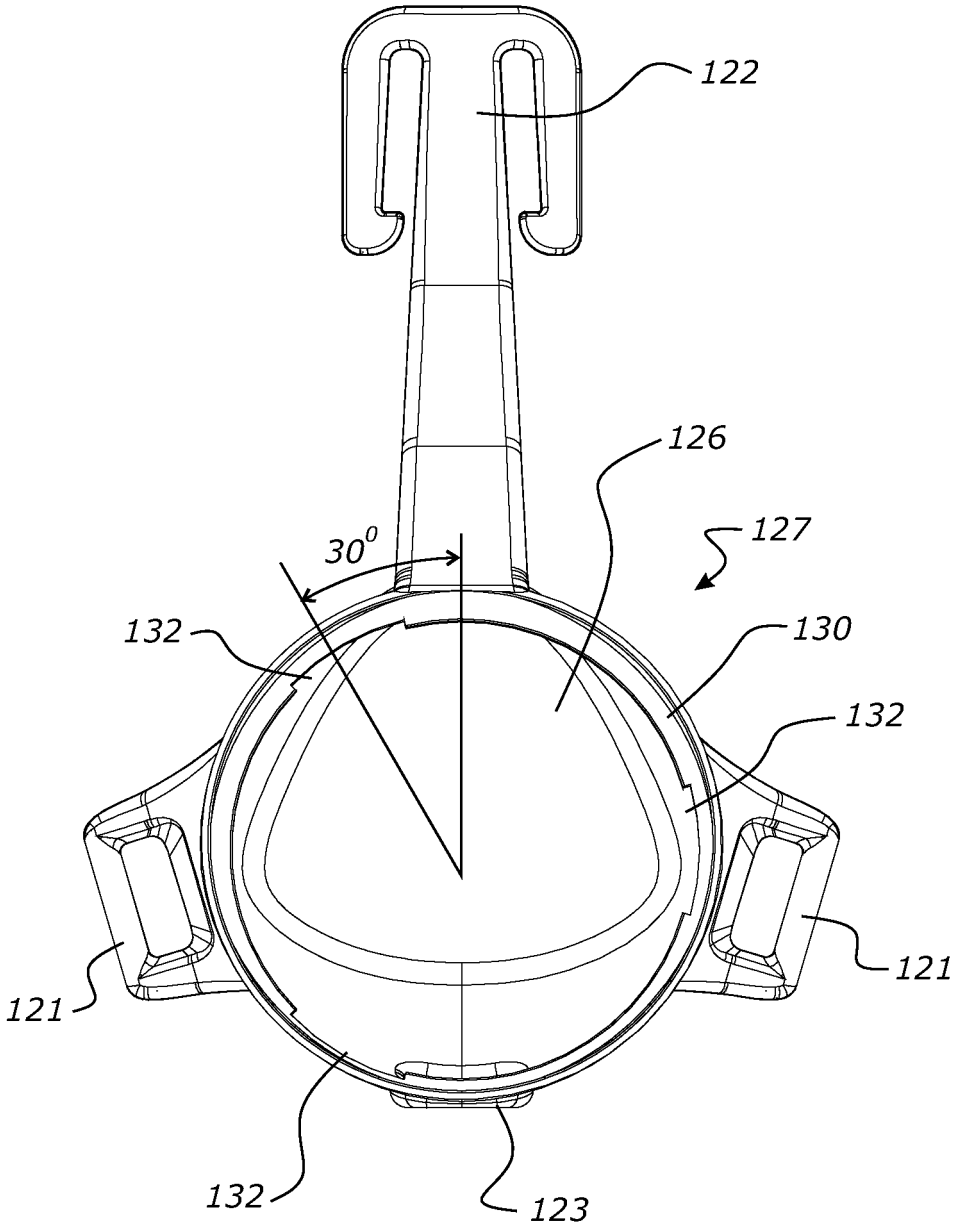

FIGURE 2H

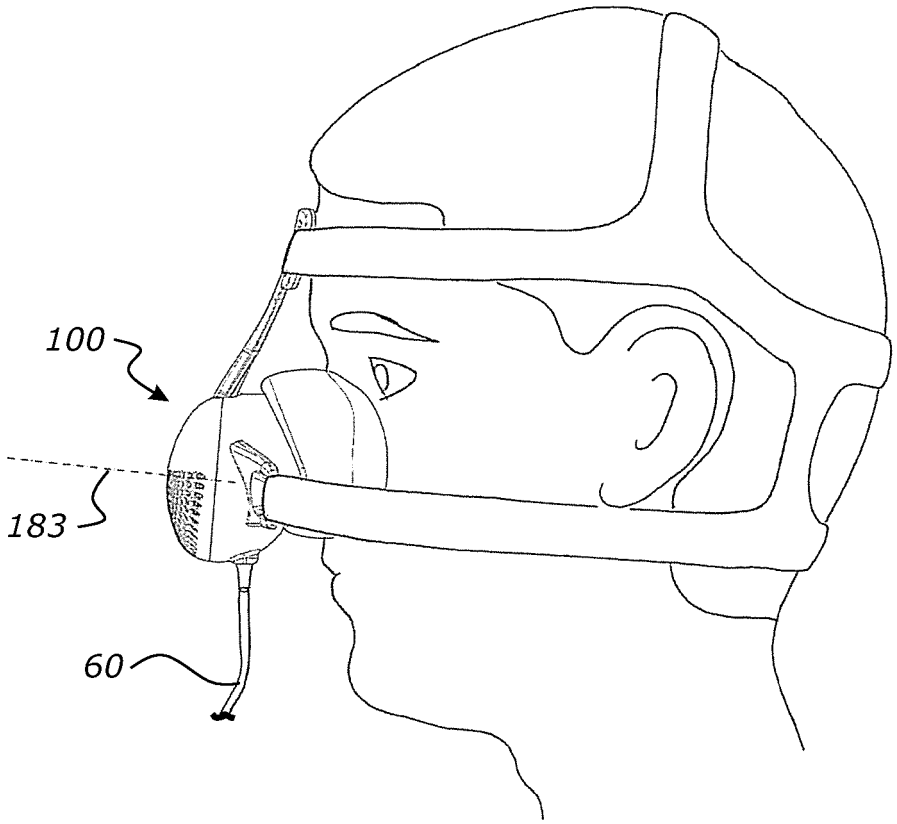

FIGURE 2I

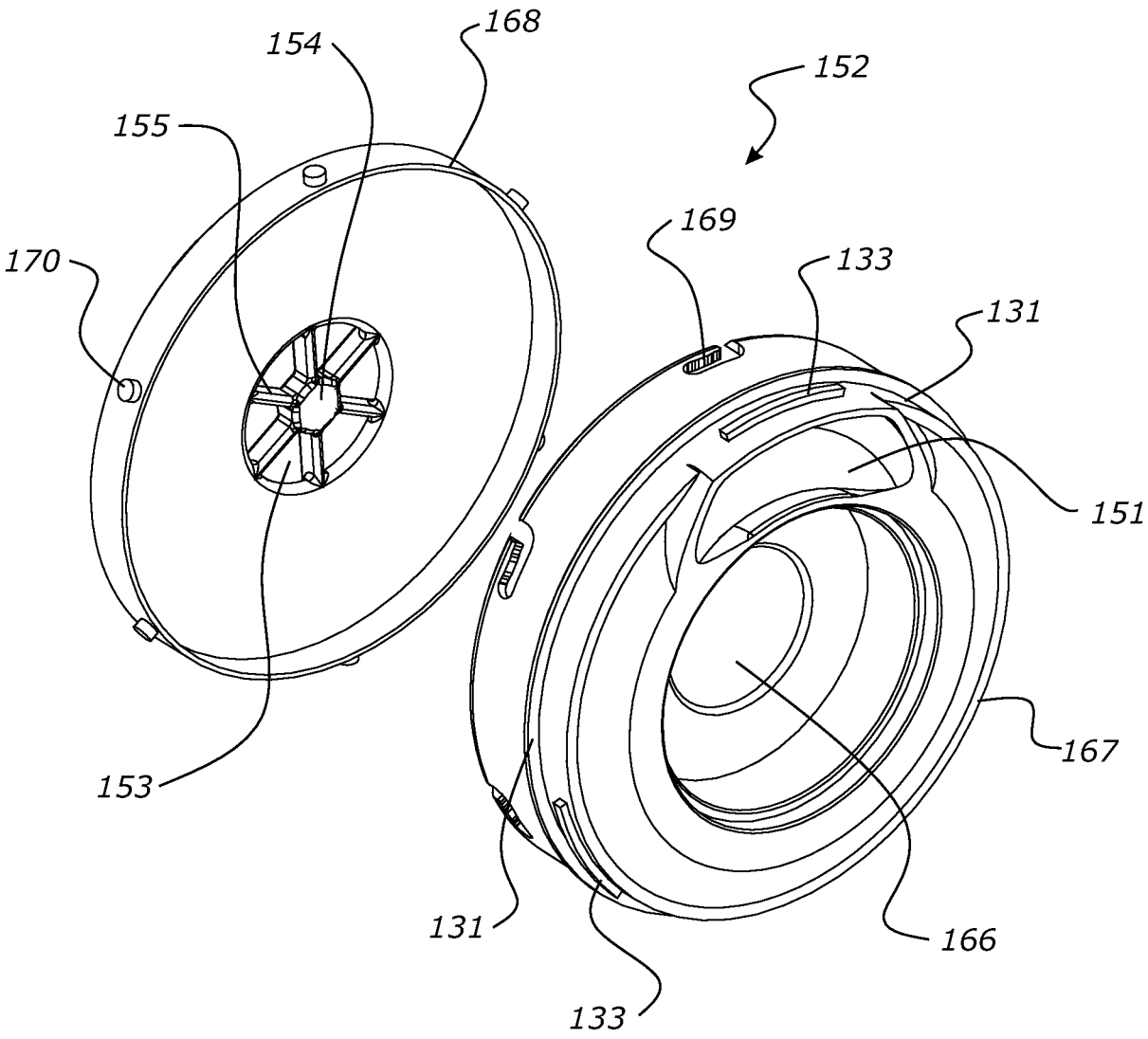

FIGURE 3A

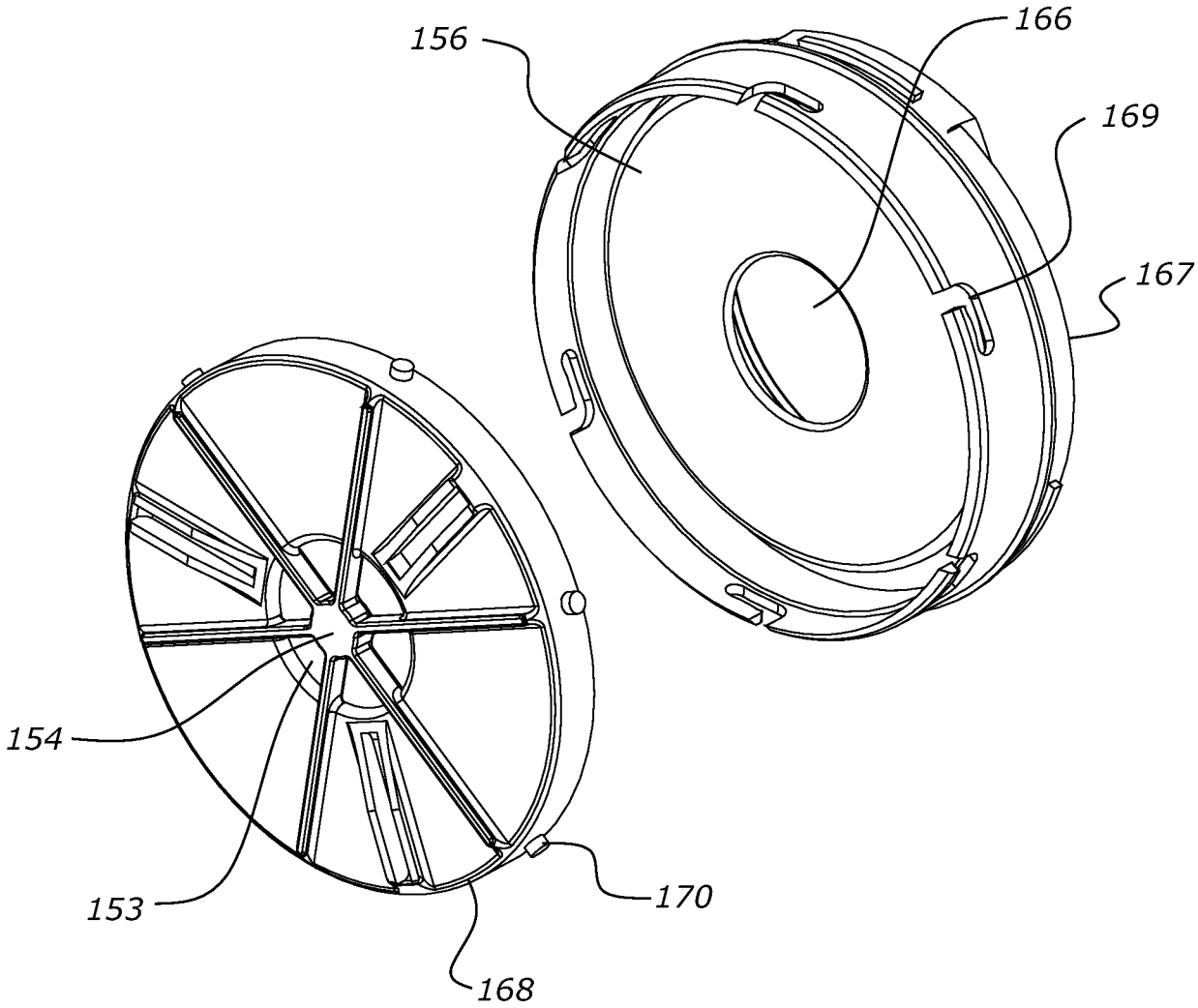

FIGURE 3B

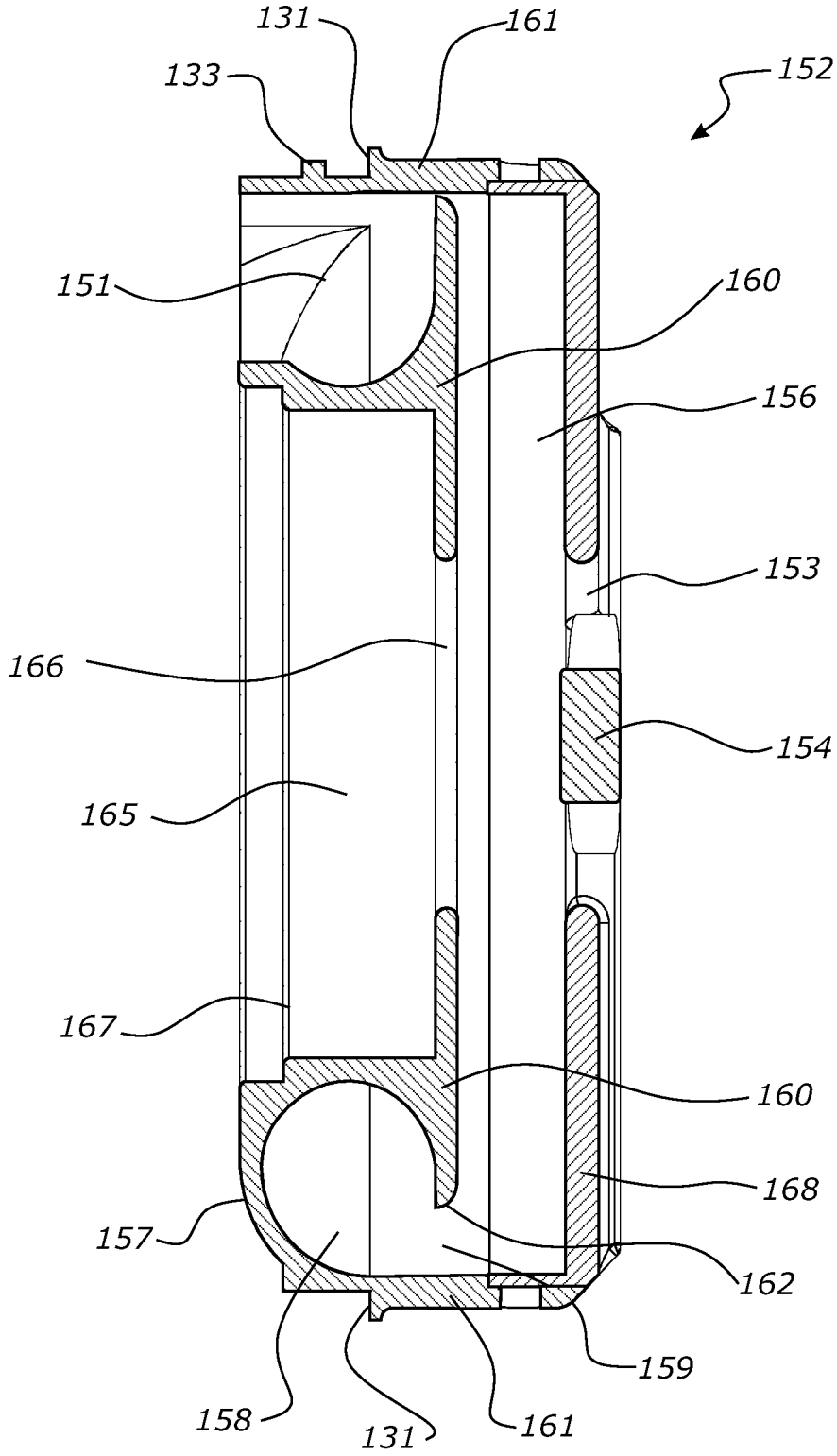
131
161
133
152
151
160
156
153
166
154
165
167
160
168
157
162
159
158
131
161

FIGURE 3C

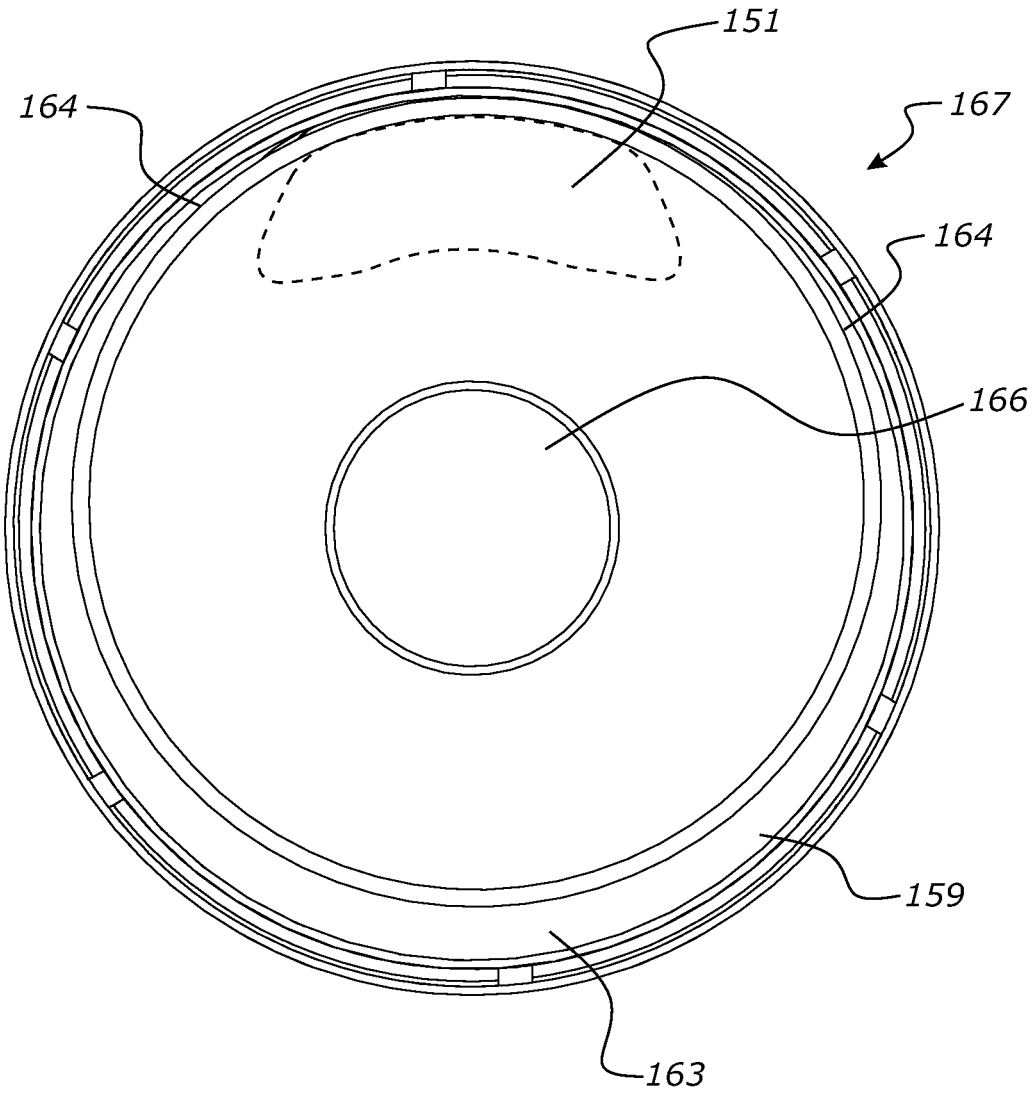

FIGURE 3D

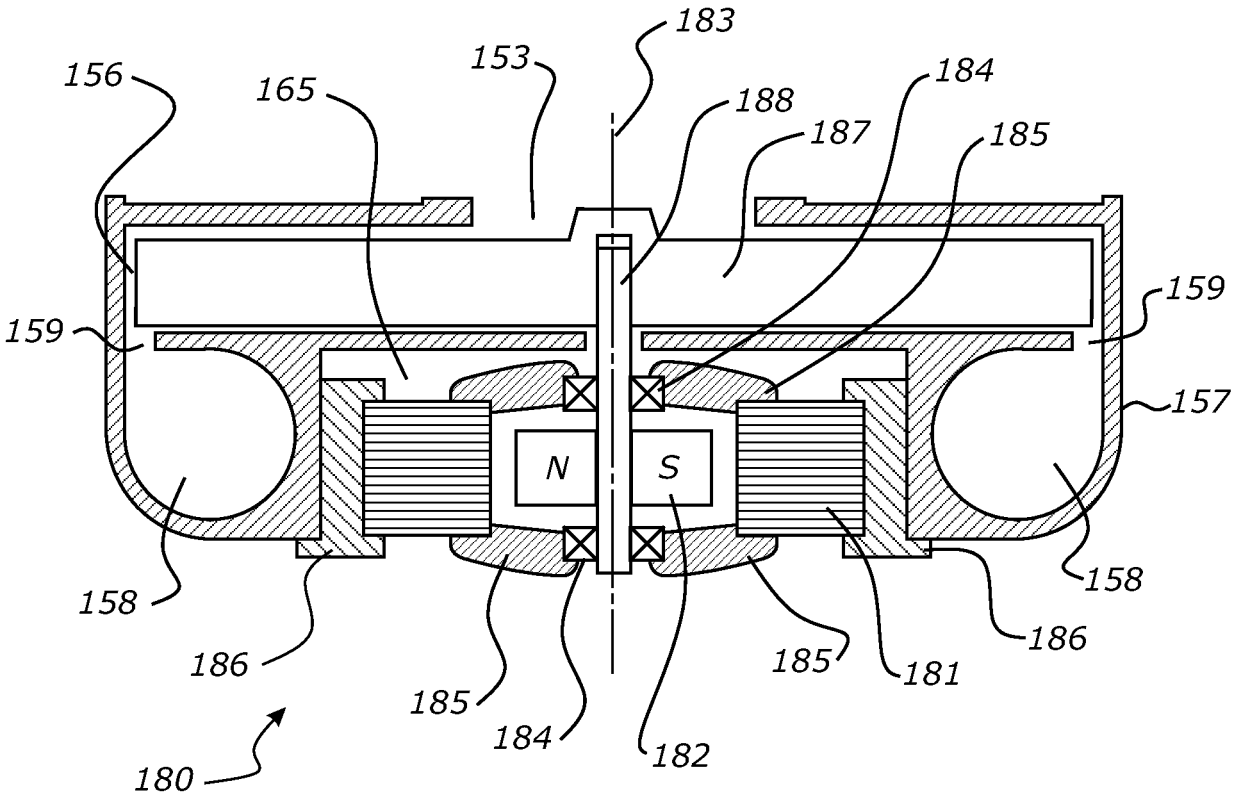
156
165
153
183
188
187
184
185
159
159
157
N
S
158
158
186
185
185
181
186
184
182
180

FIGURE 4

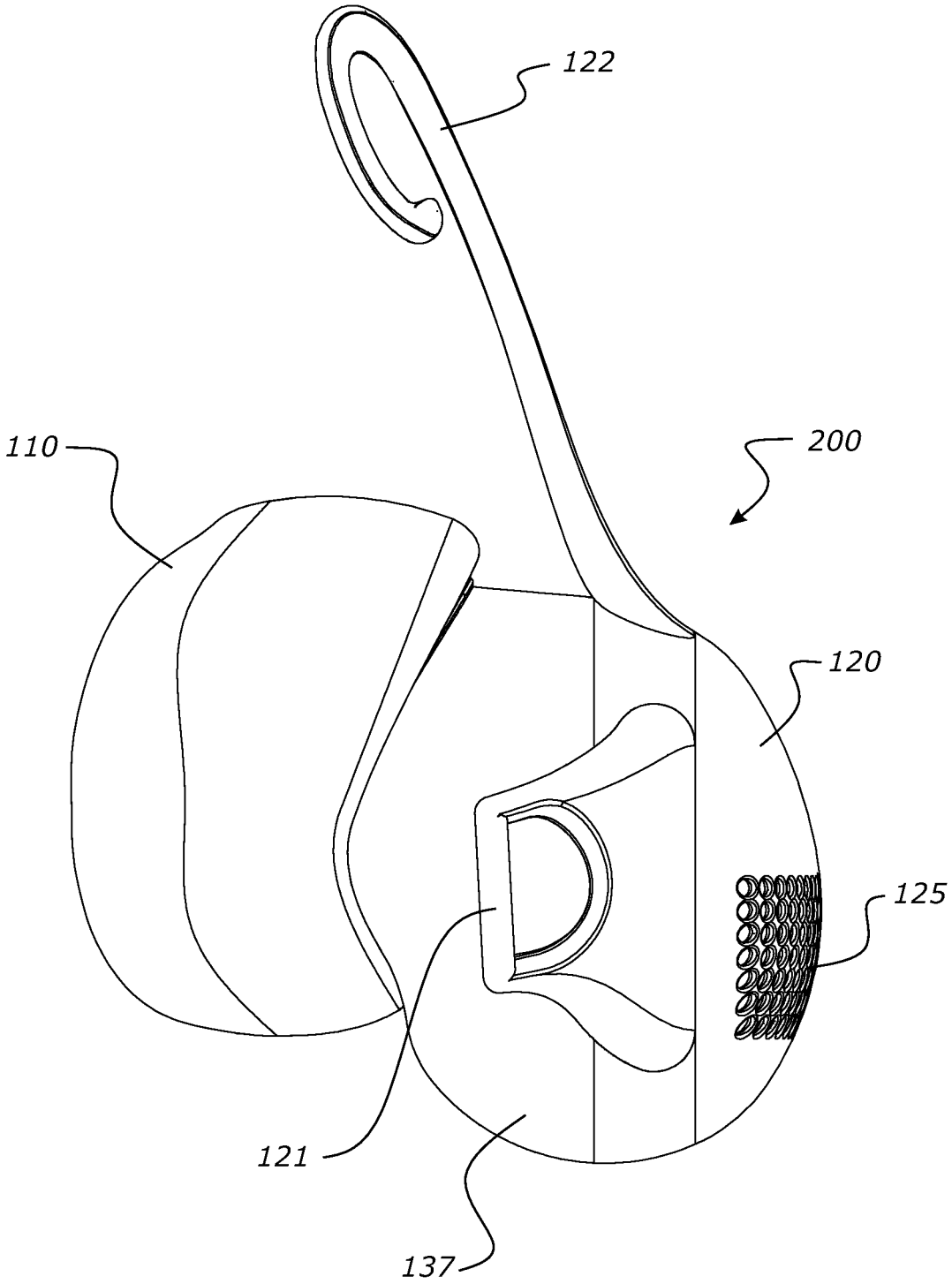

FIGURE 5A

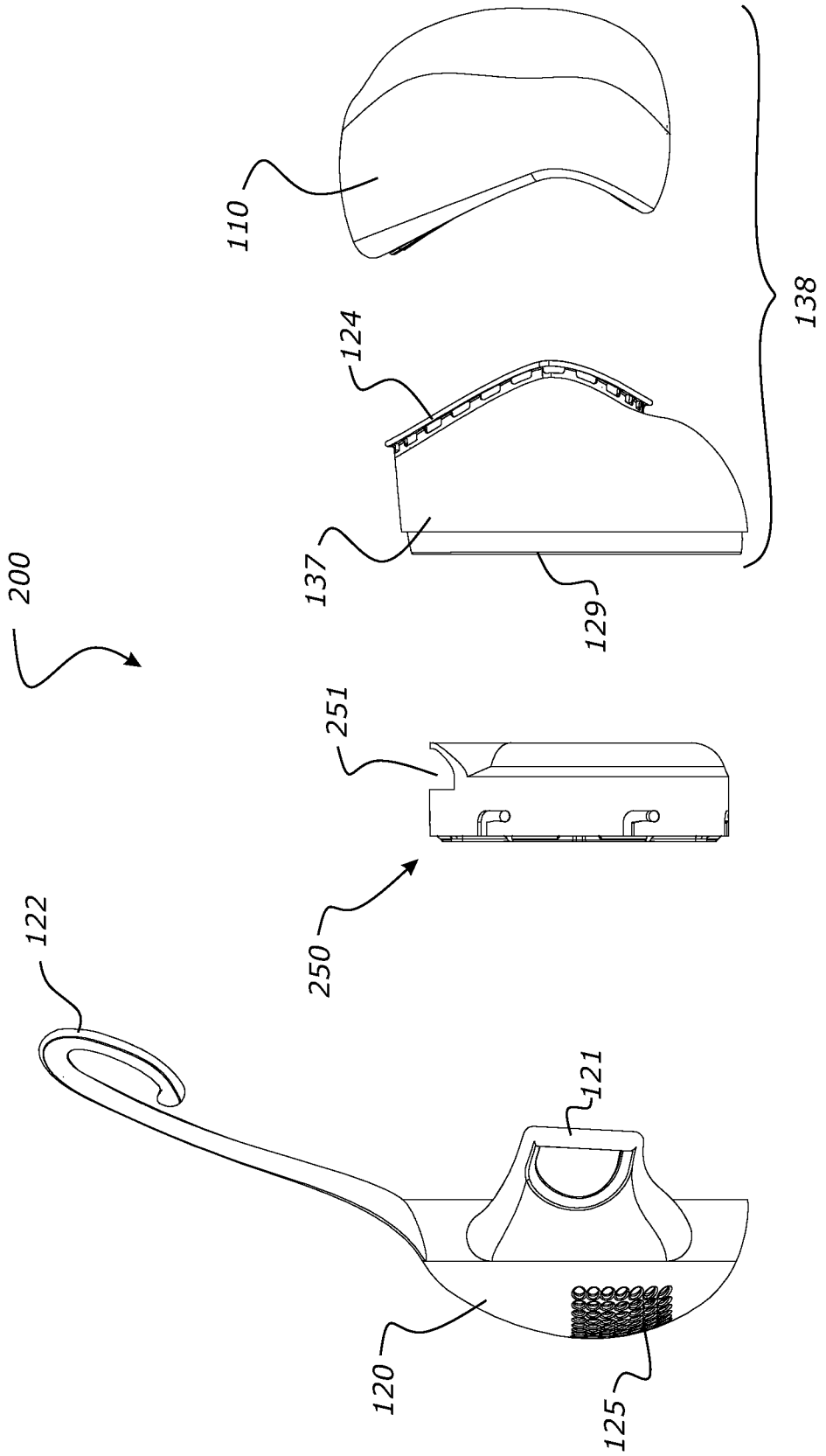

FIGURE 5B

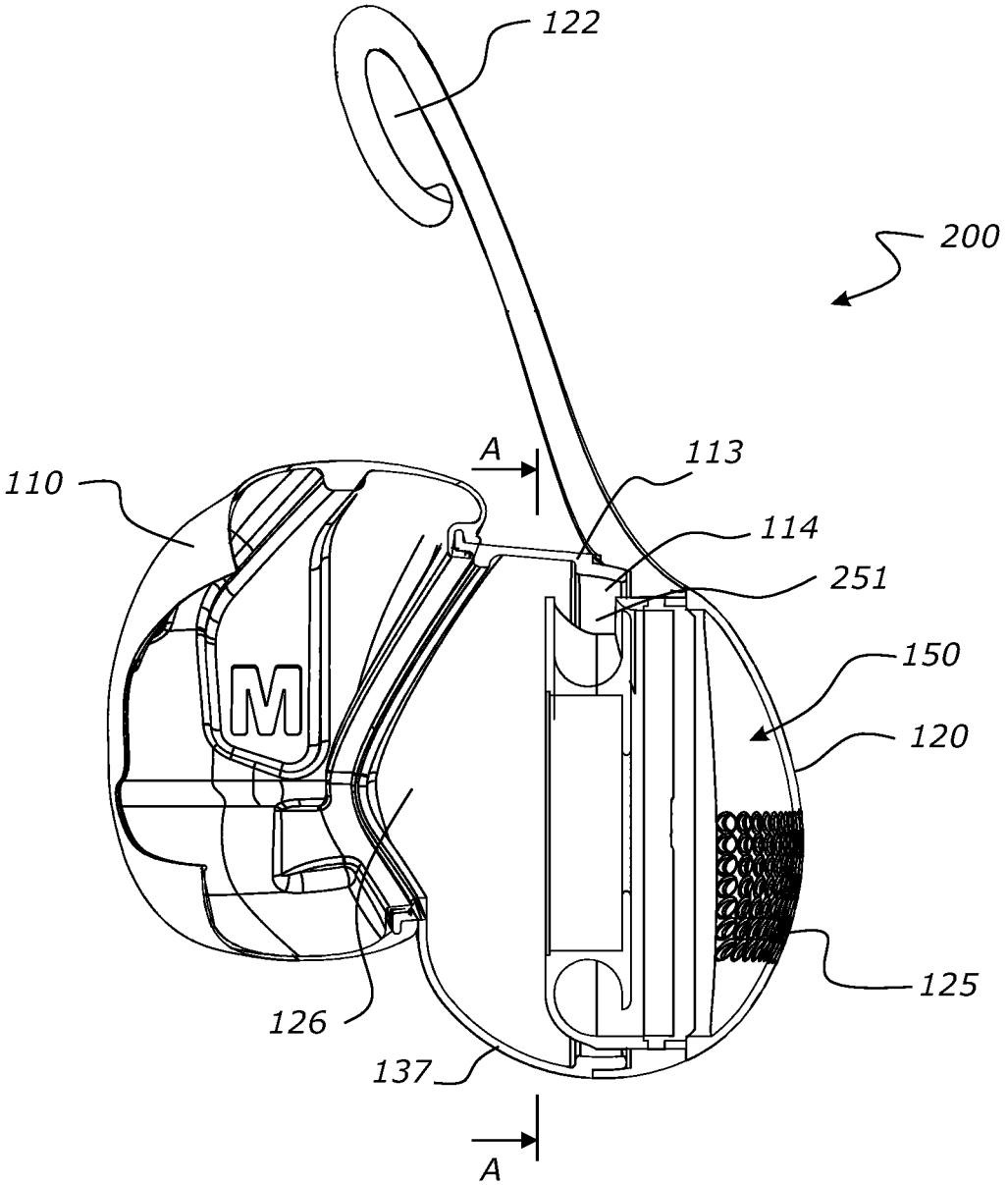

FIGURE 5C

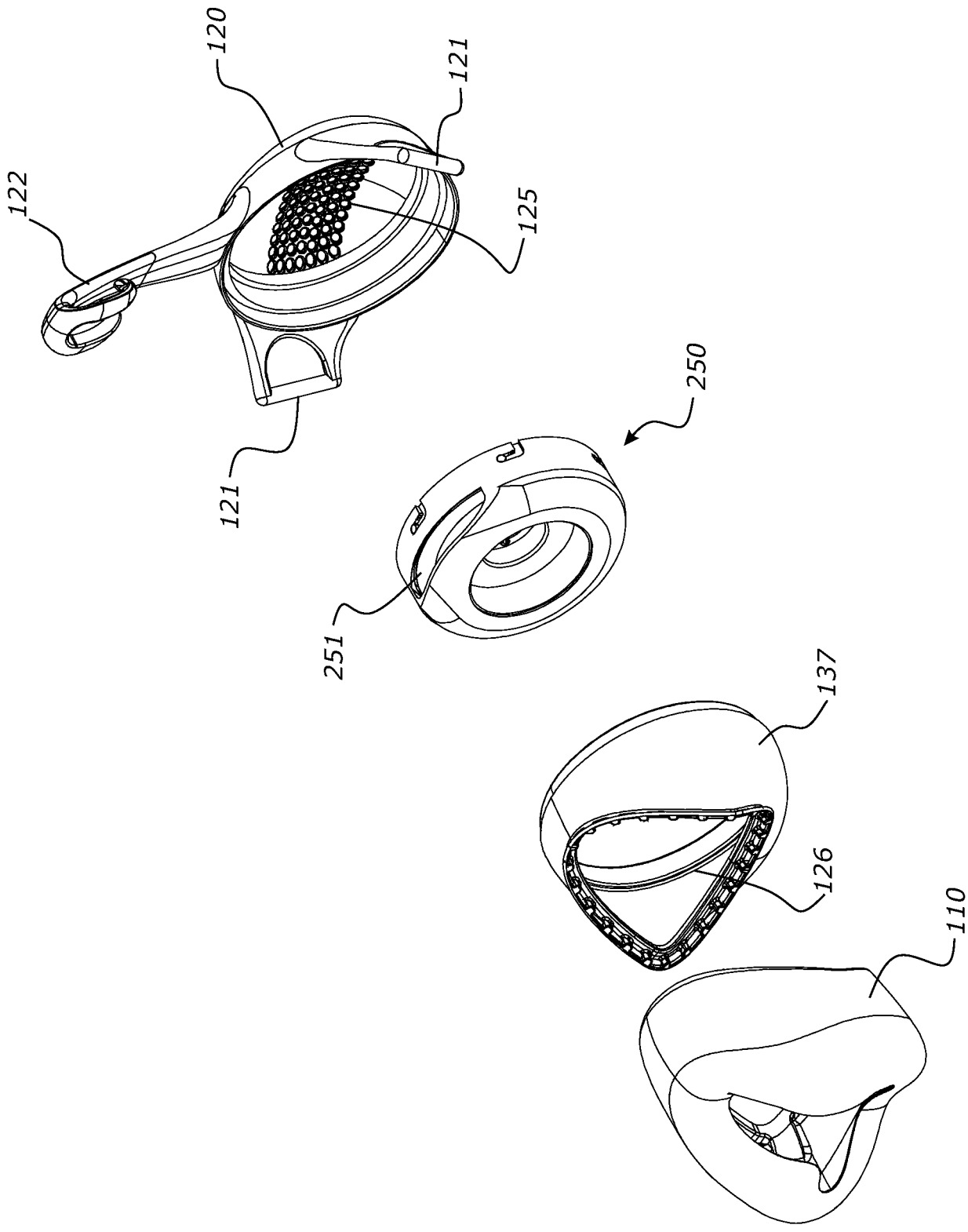

FIGURE 5D

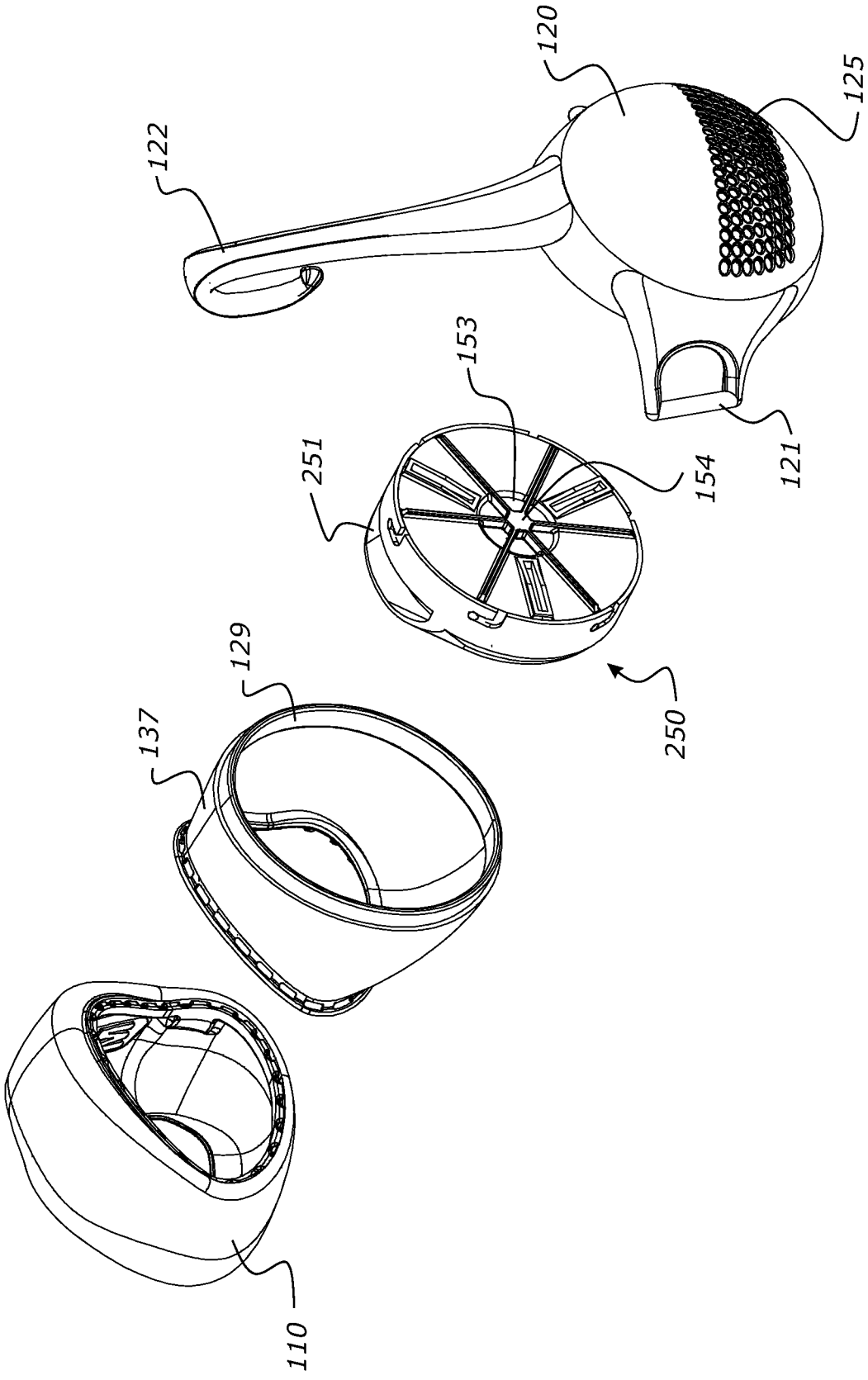

FIGURE 5E

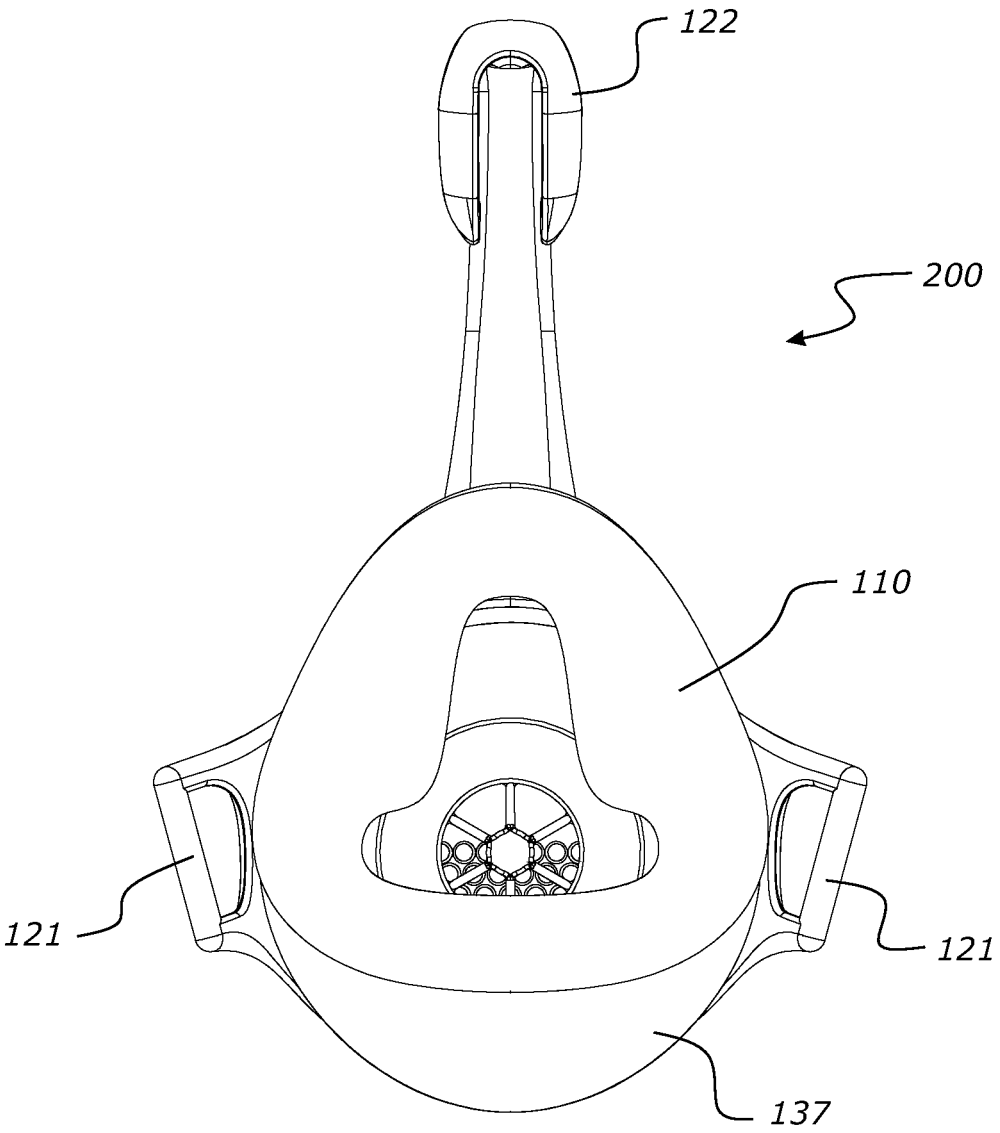

FIGURE 5F

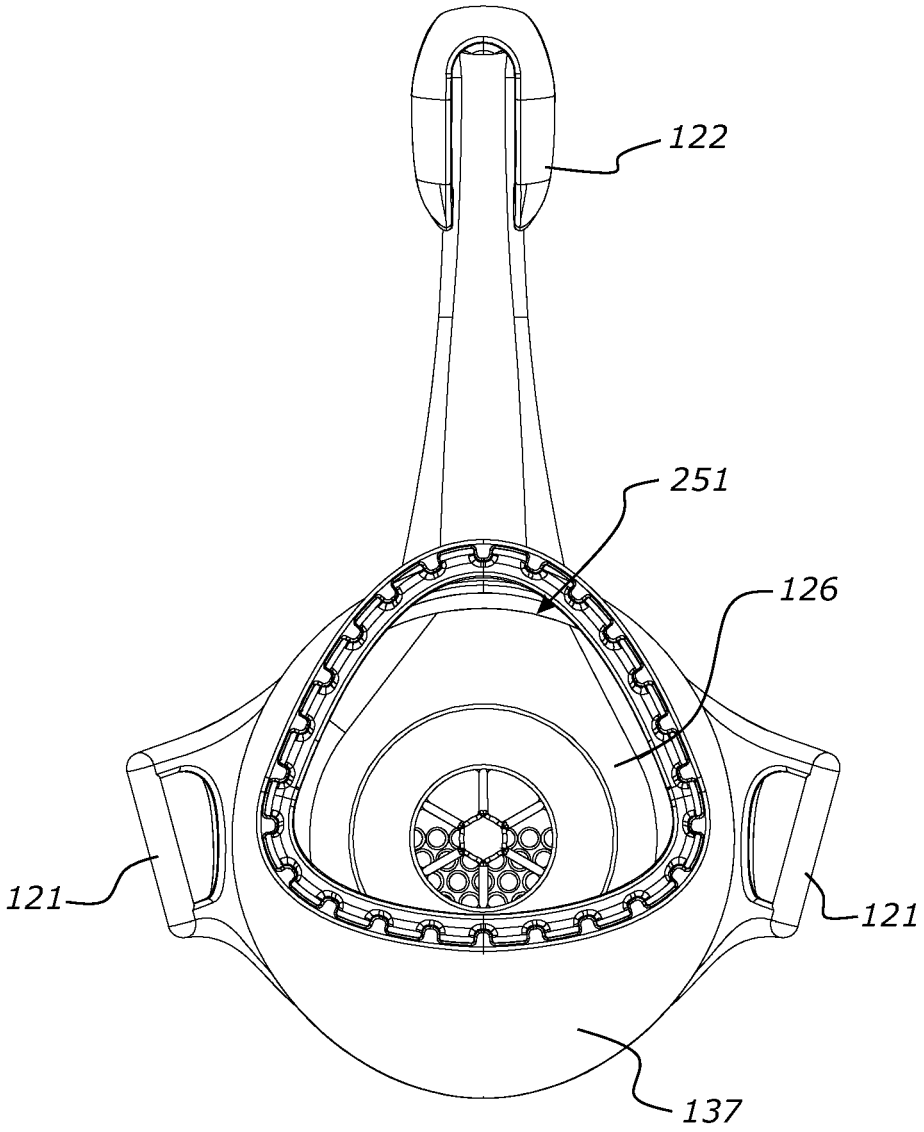

FIGURE 5G

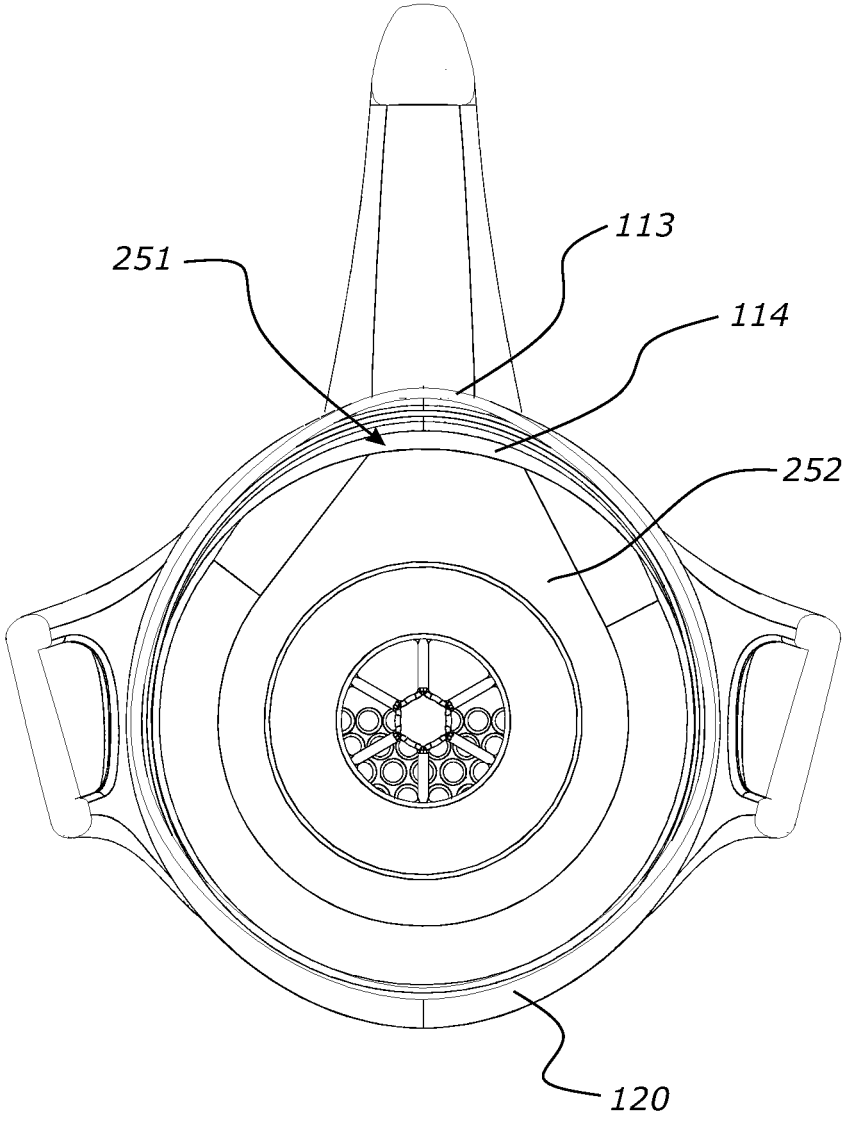

FIGURE 5H

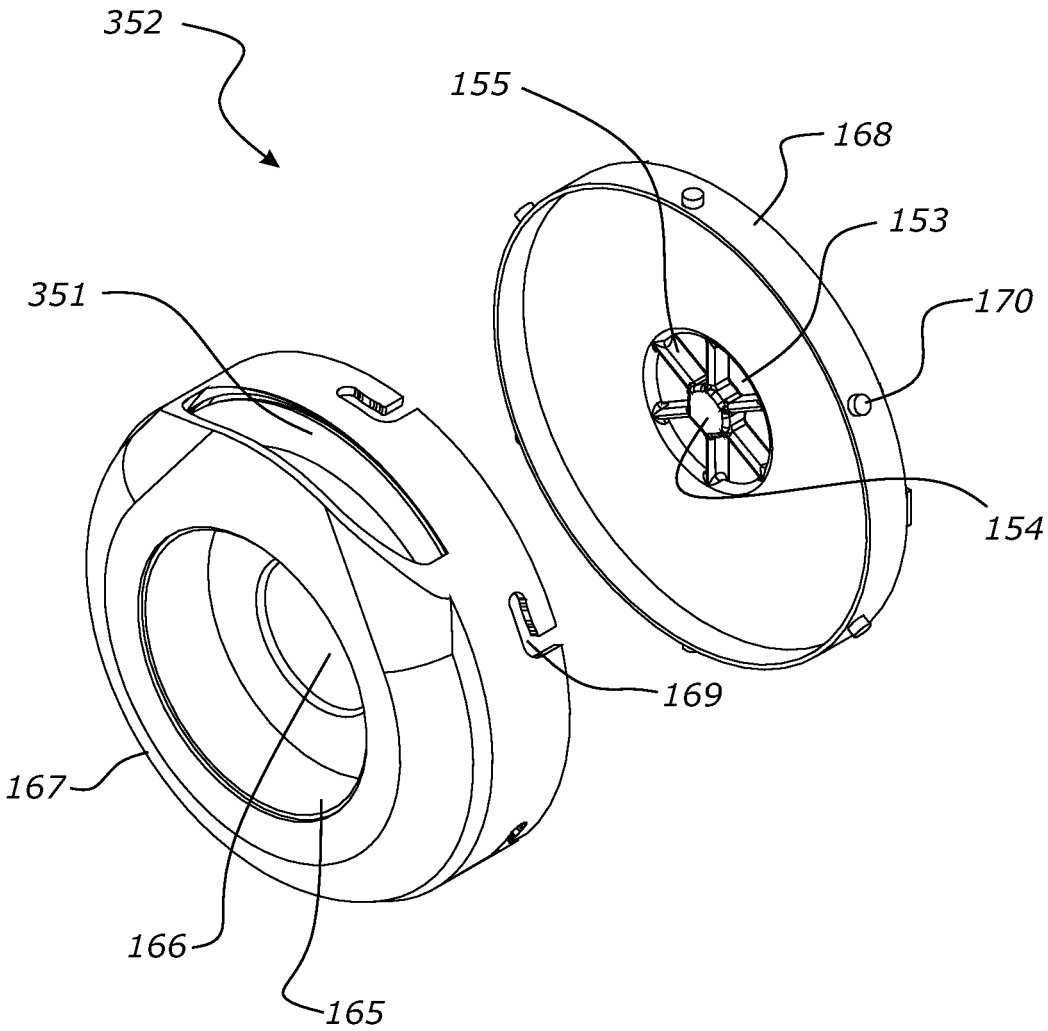

FIGURE 6A

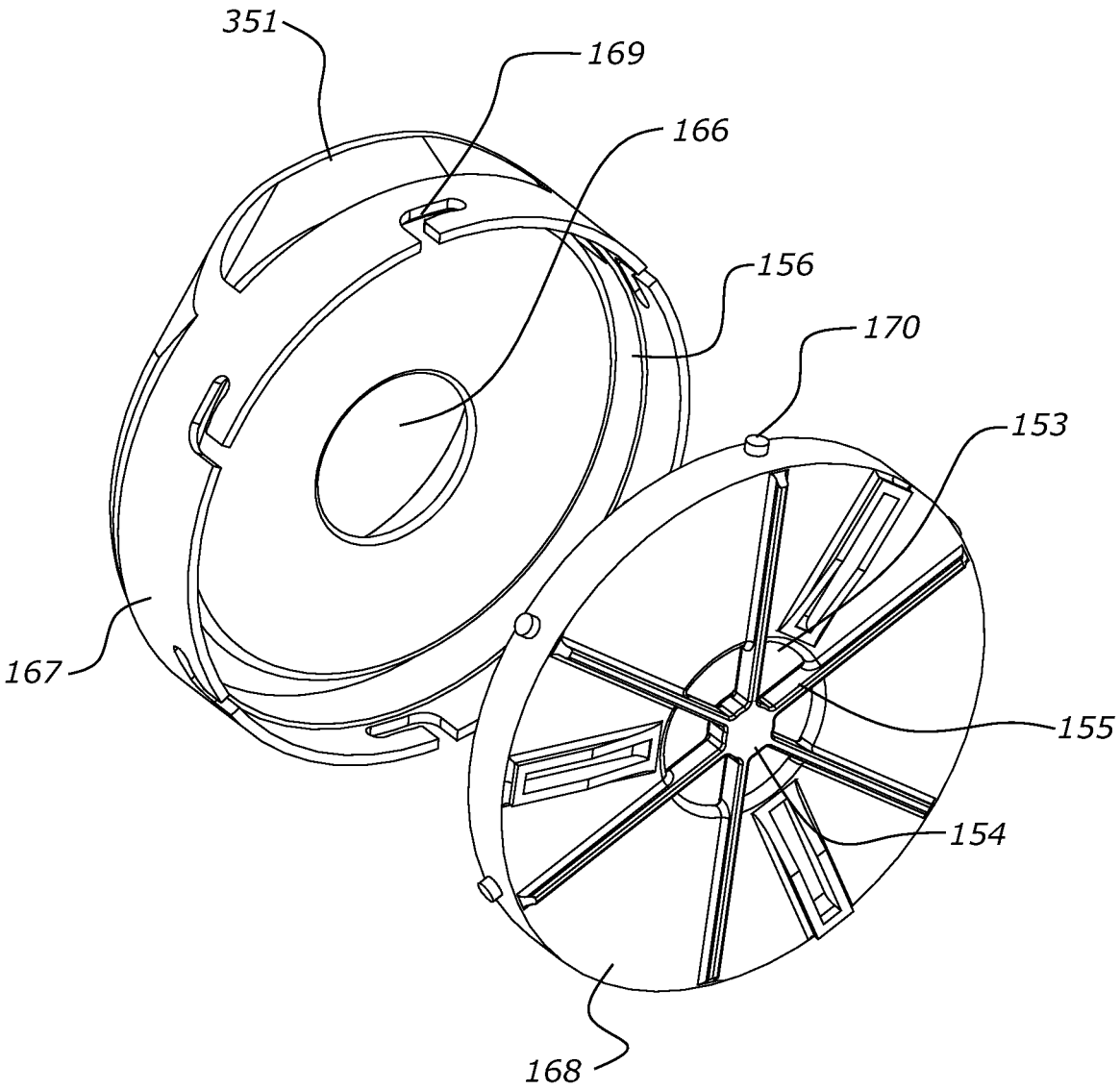

FIGURE 6B

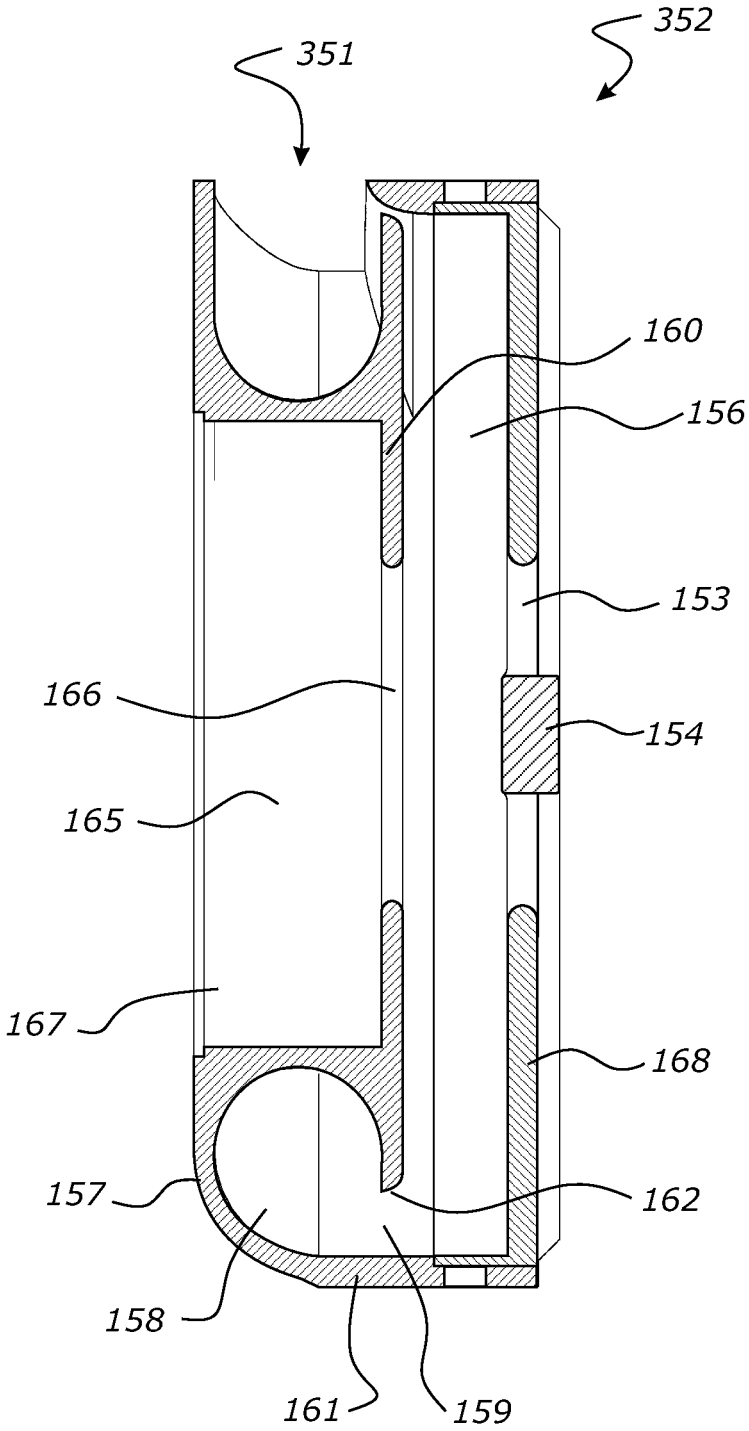

FIGURE 6C

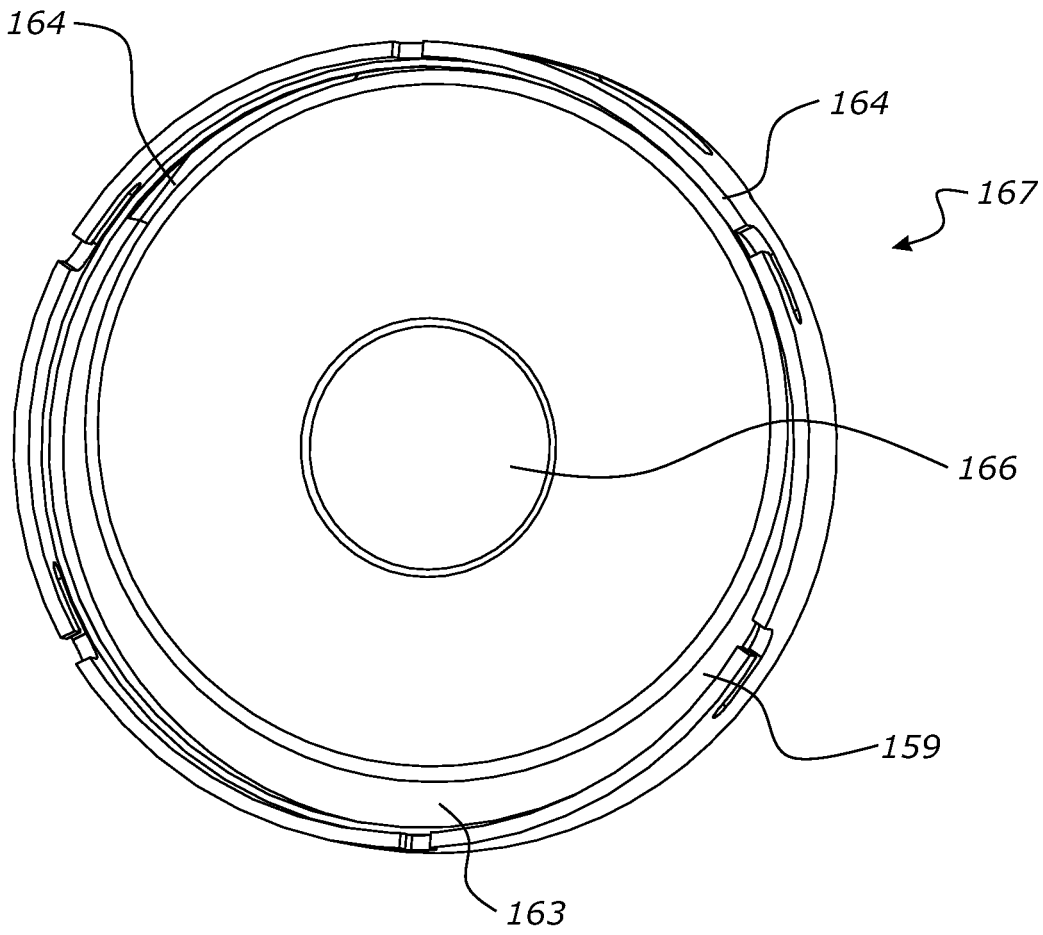

FIGURE 6D

FIGURE 7A

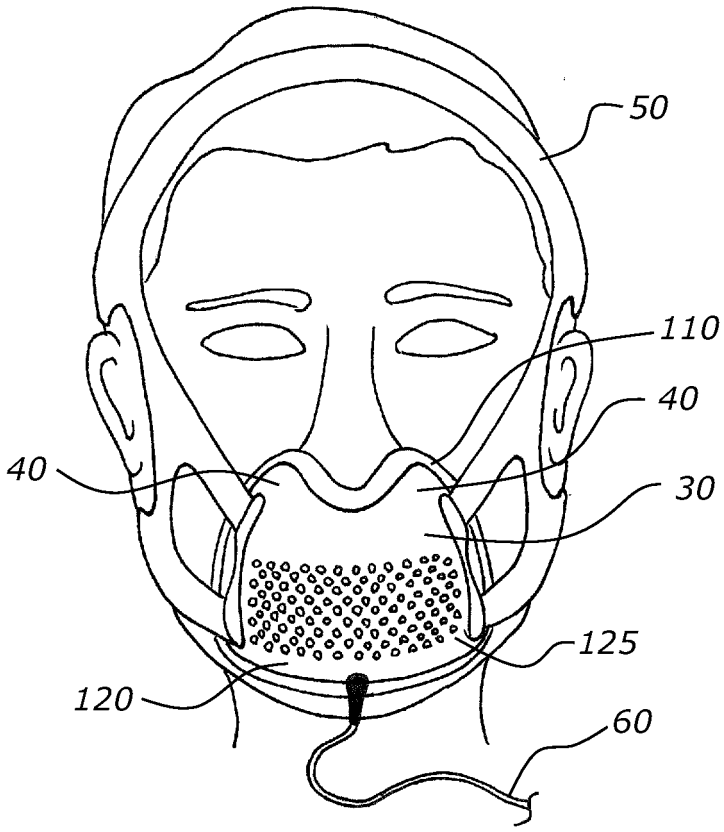

FIGURE 7B

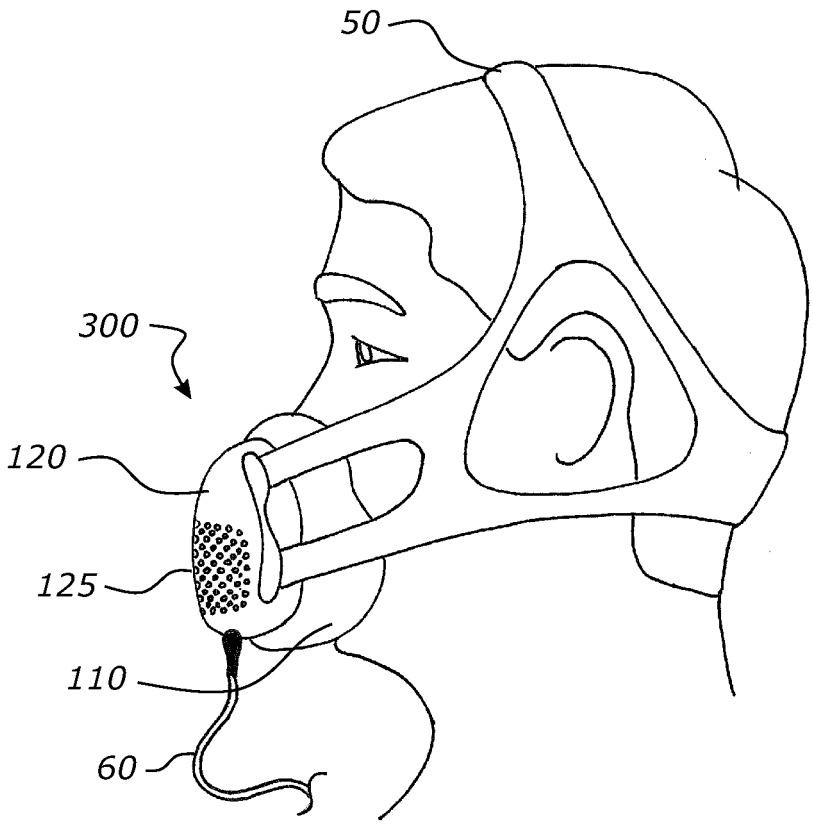

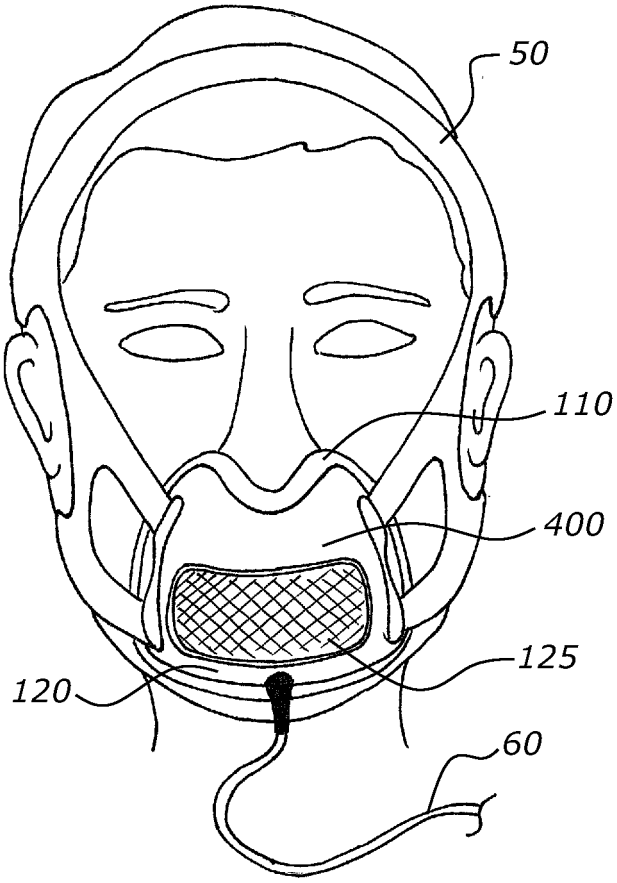

FIGURE 8A

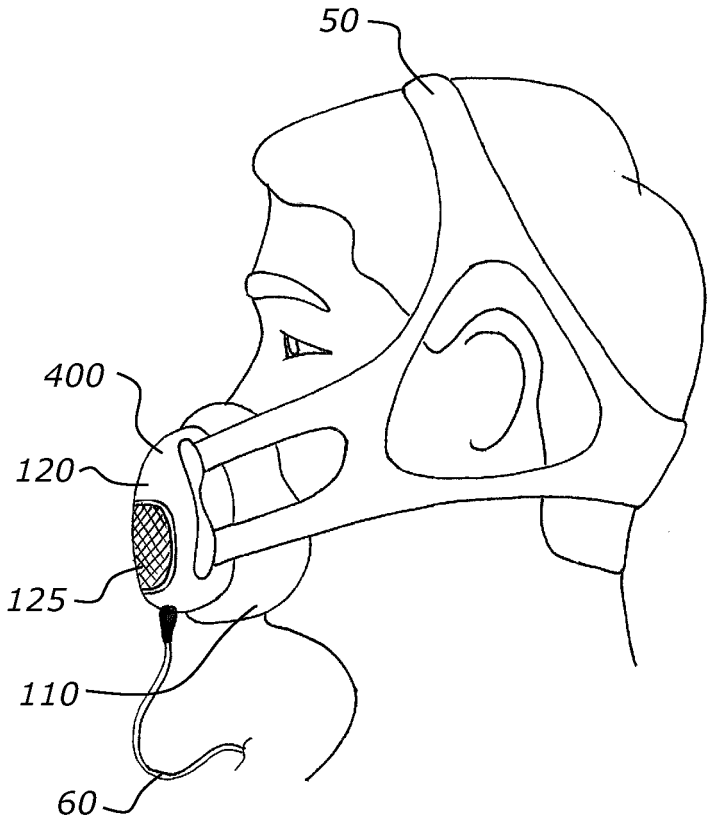

FIGURE 8B

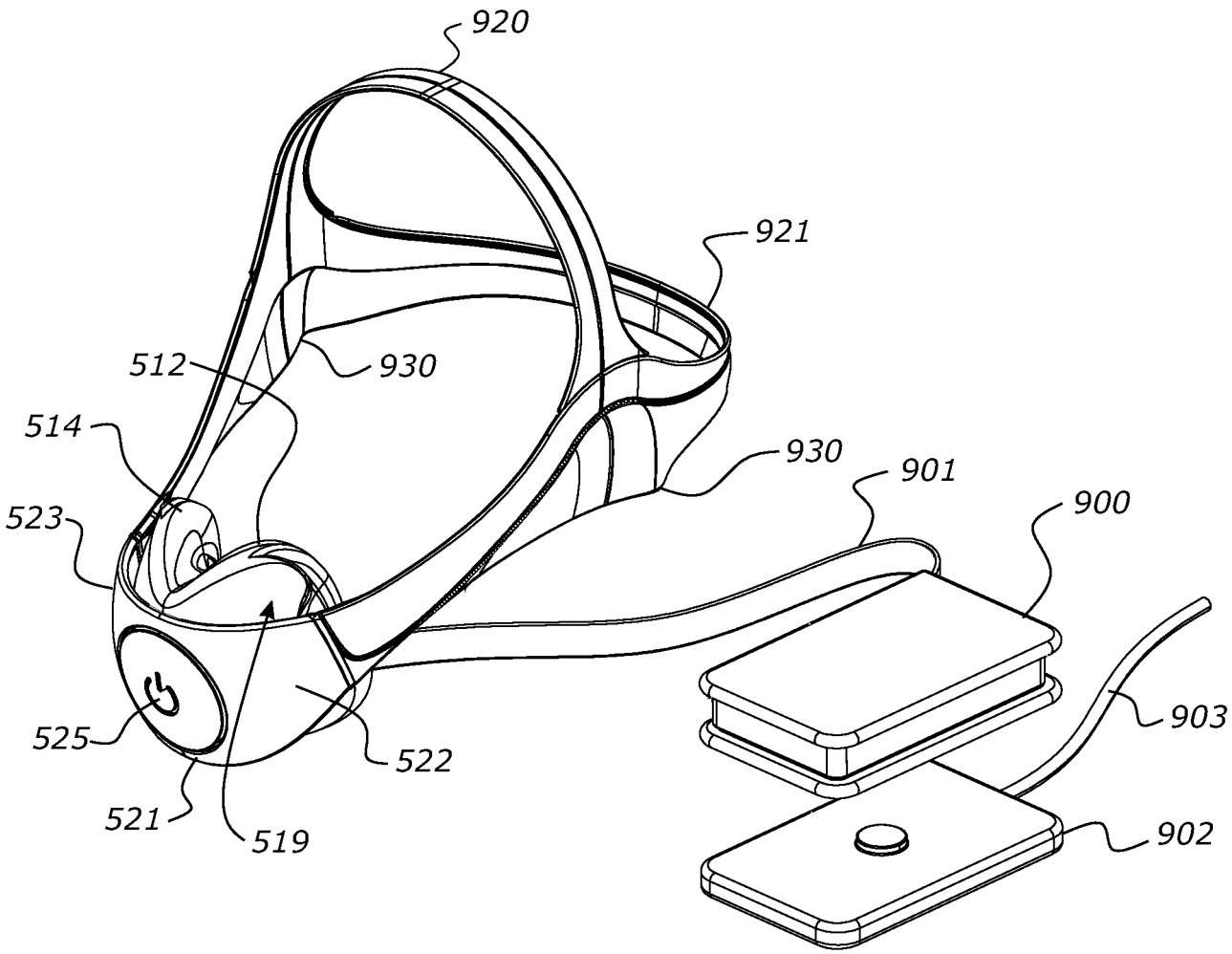

FIGURE 9A

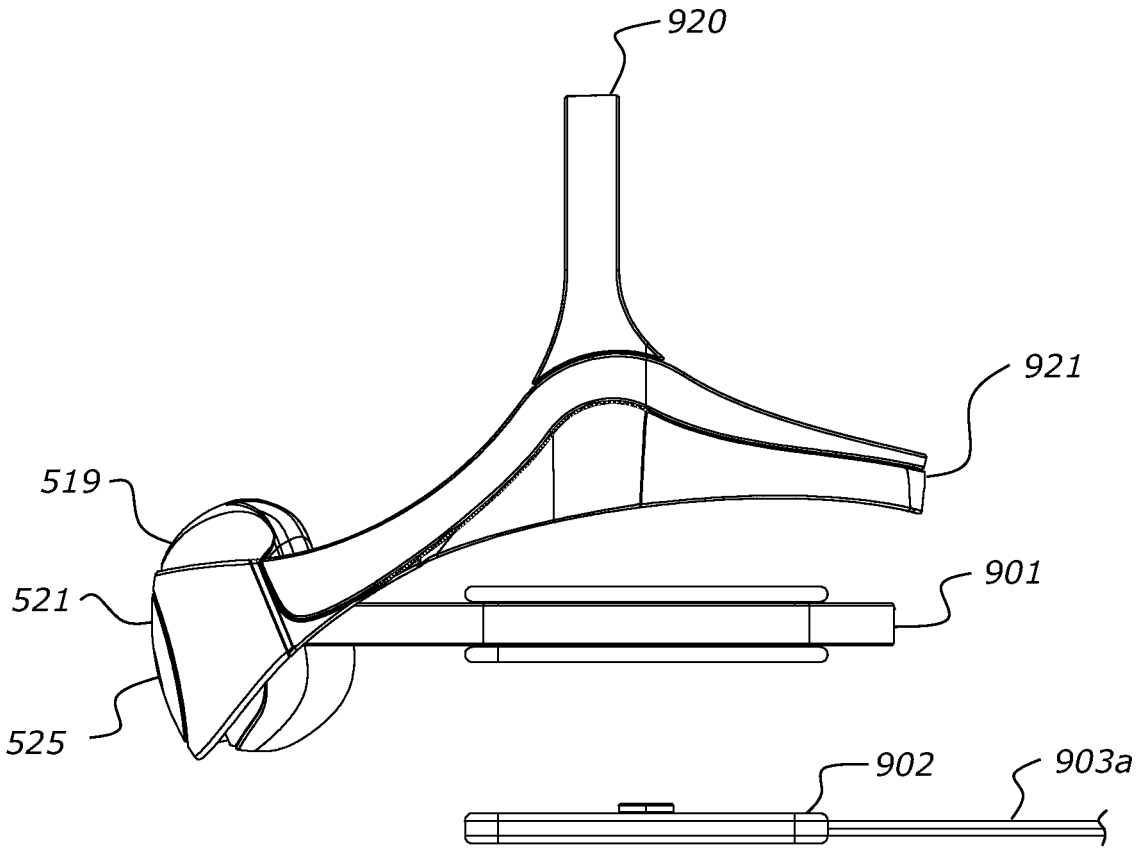

FIGURE 9B

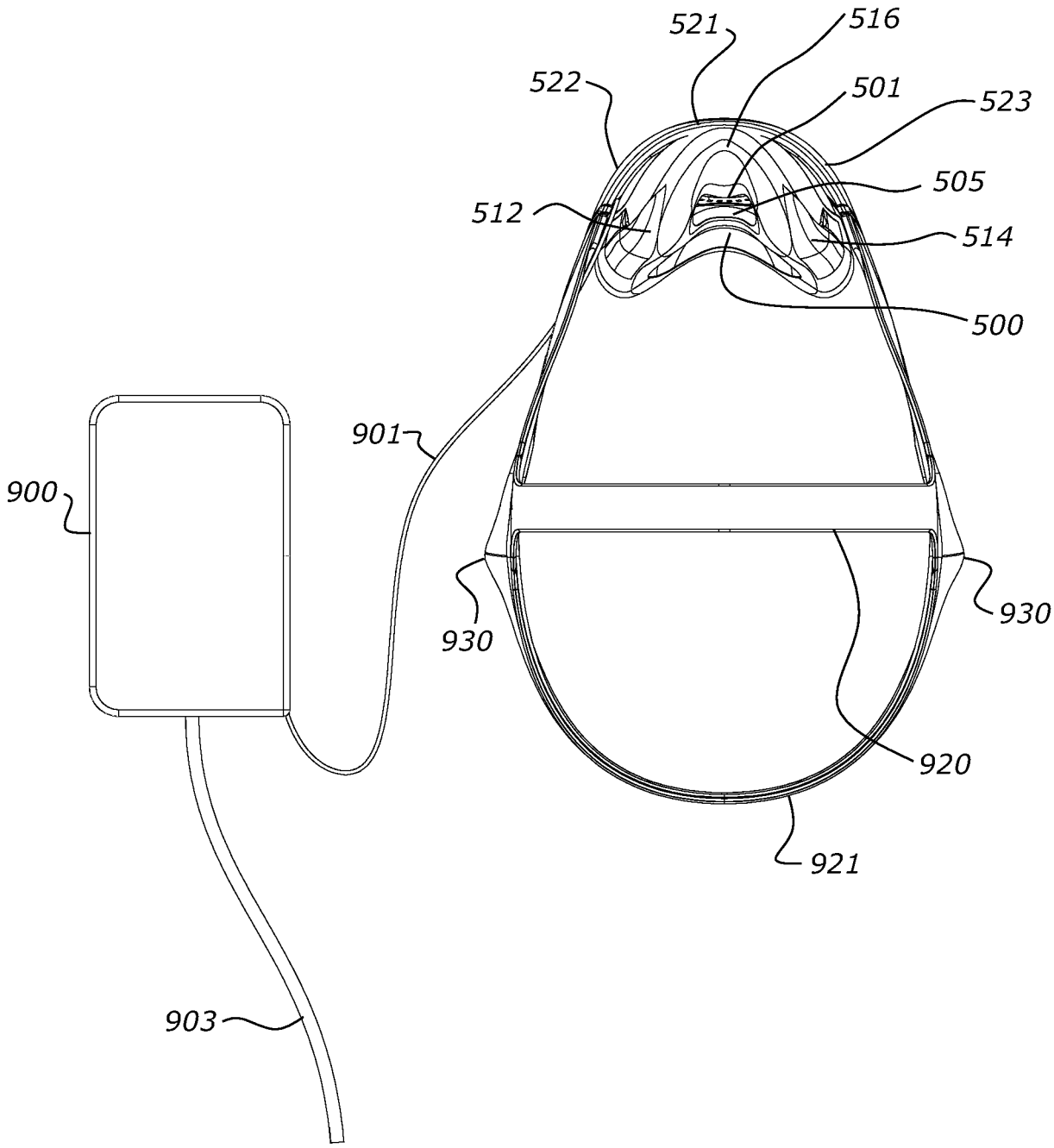

FIGURE 9C

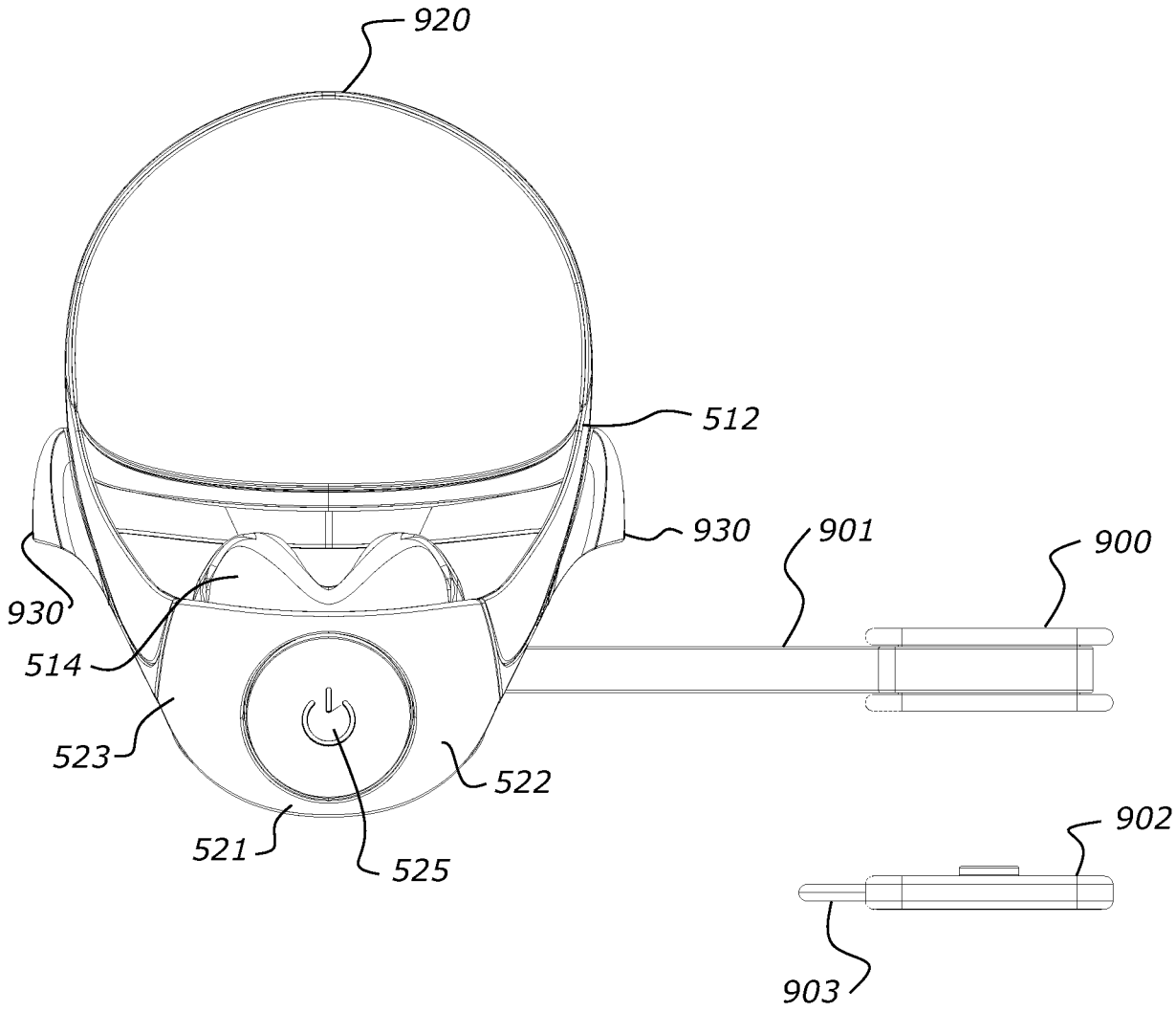

FIGURE 9D

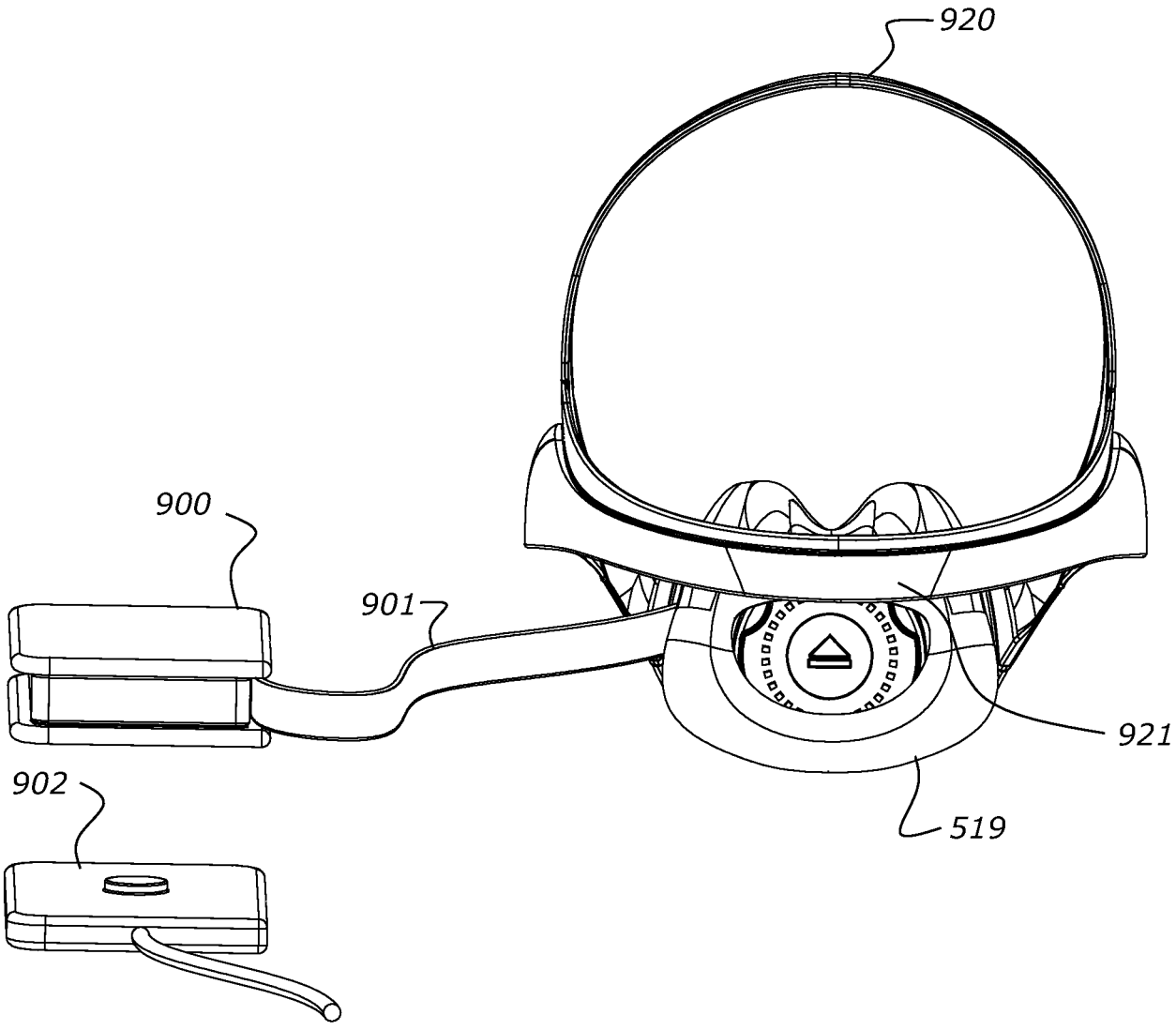

FIGURE 9E

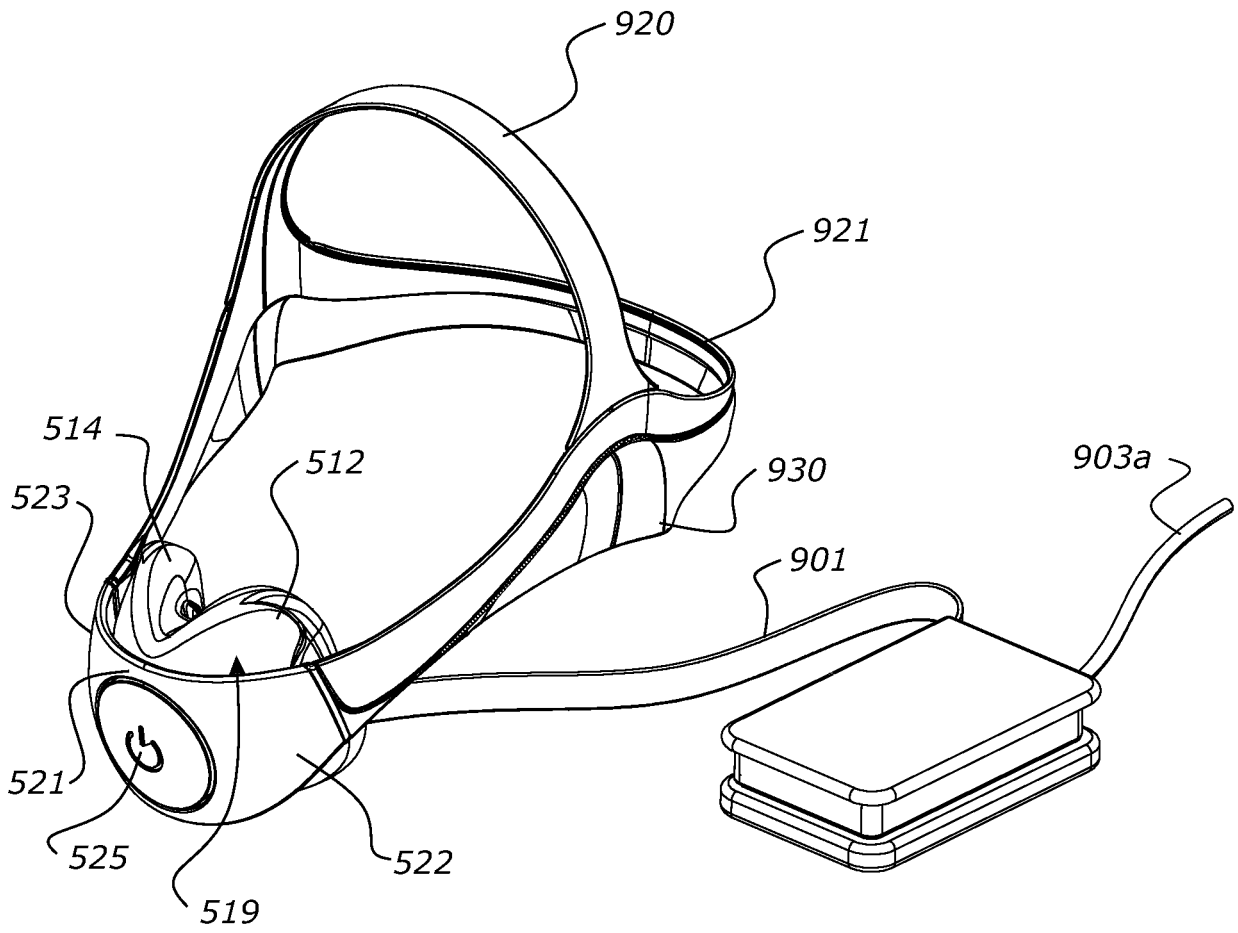

FIGURE 10

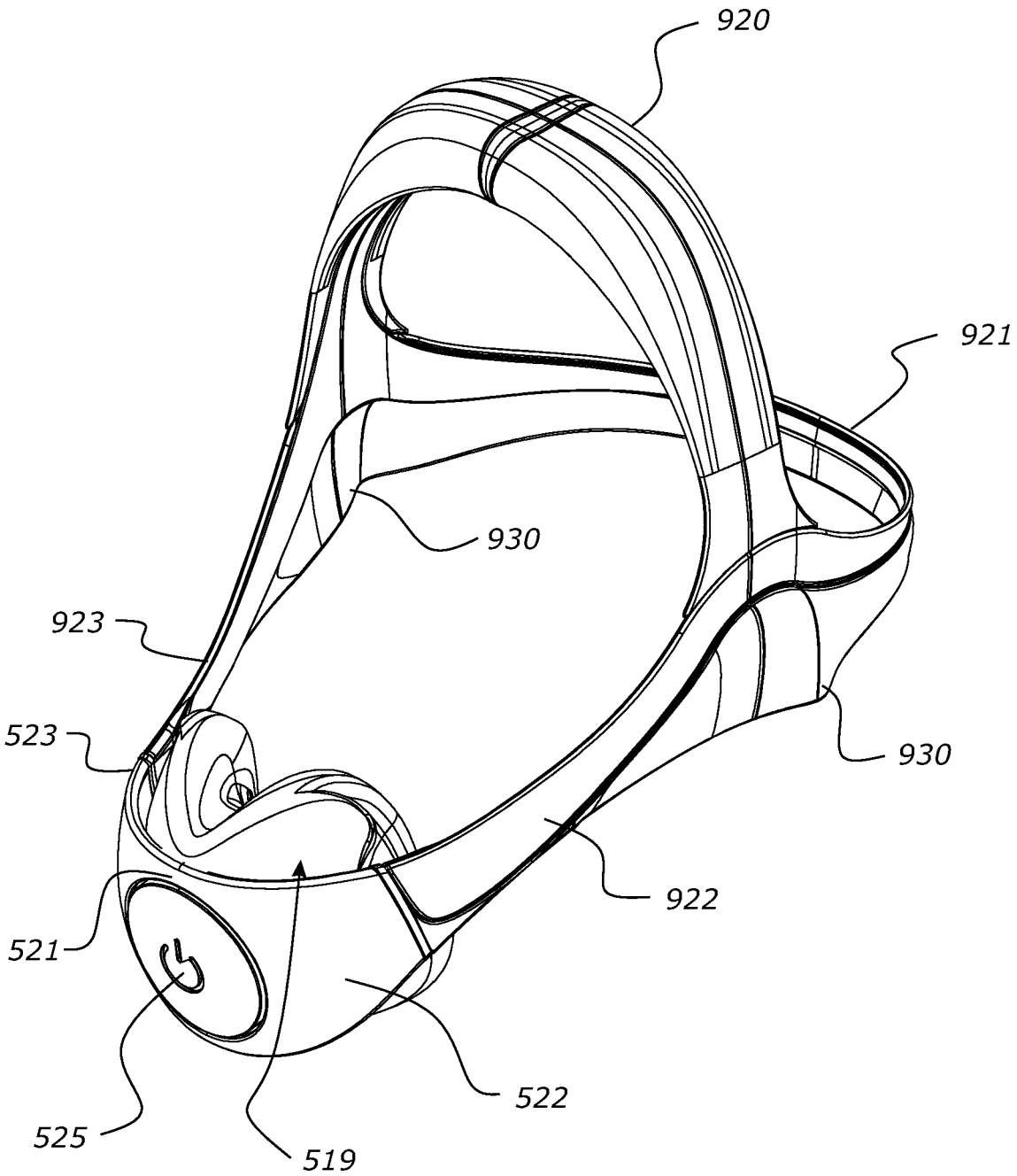

FIGURE 11A

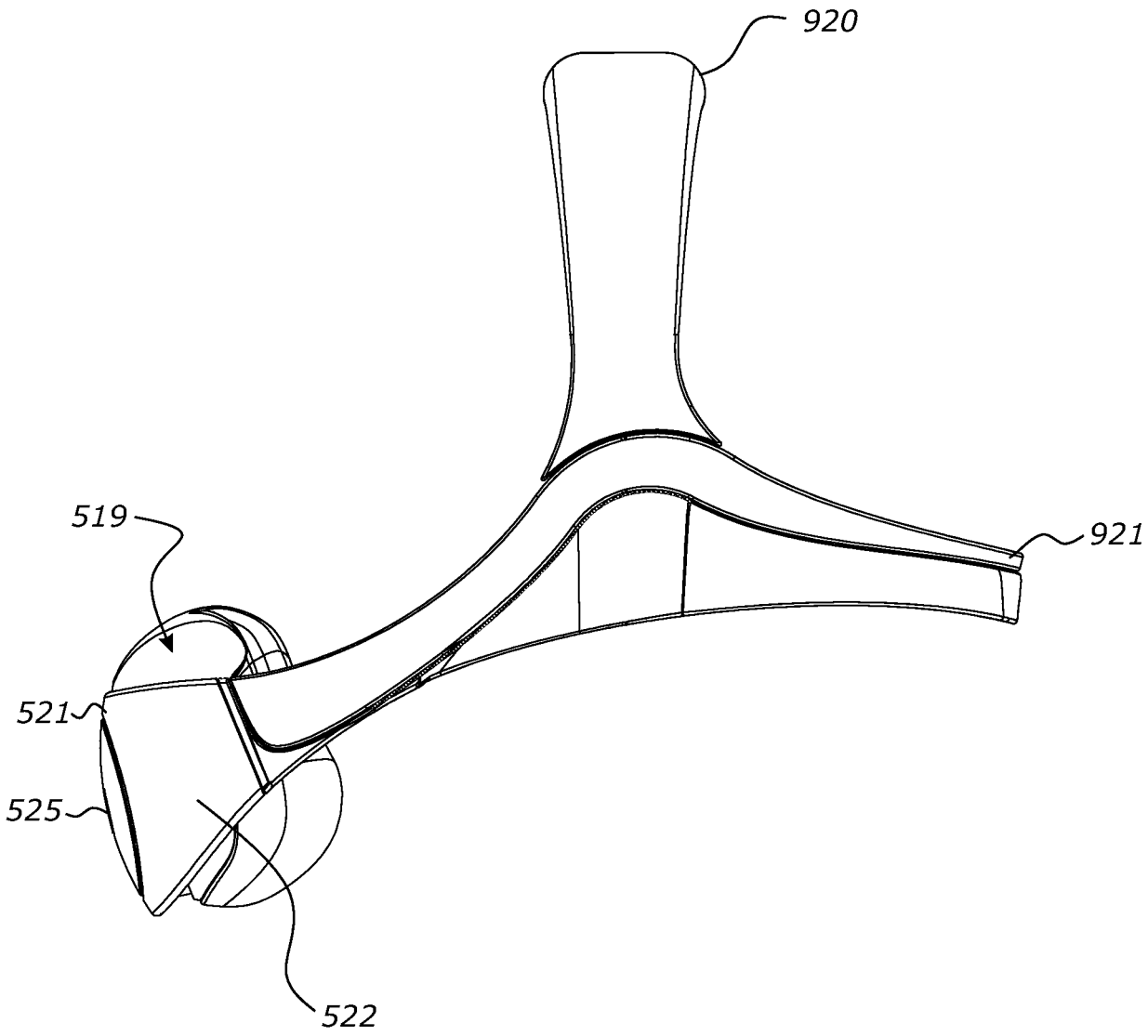

FIGURE 11B

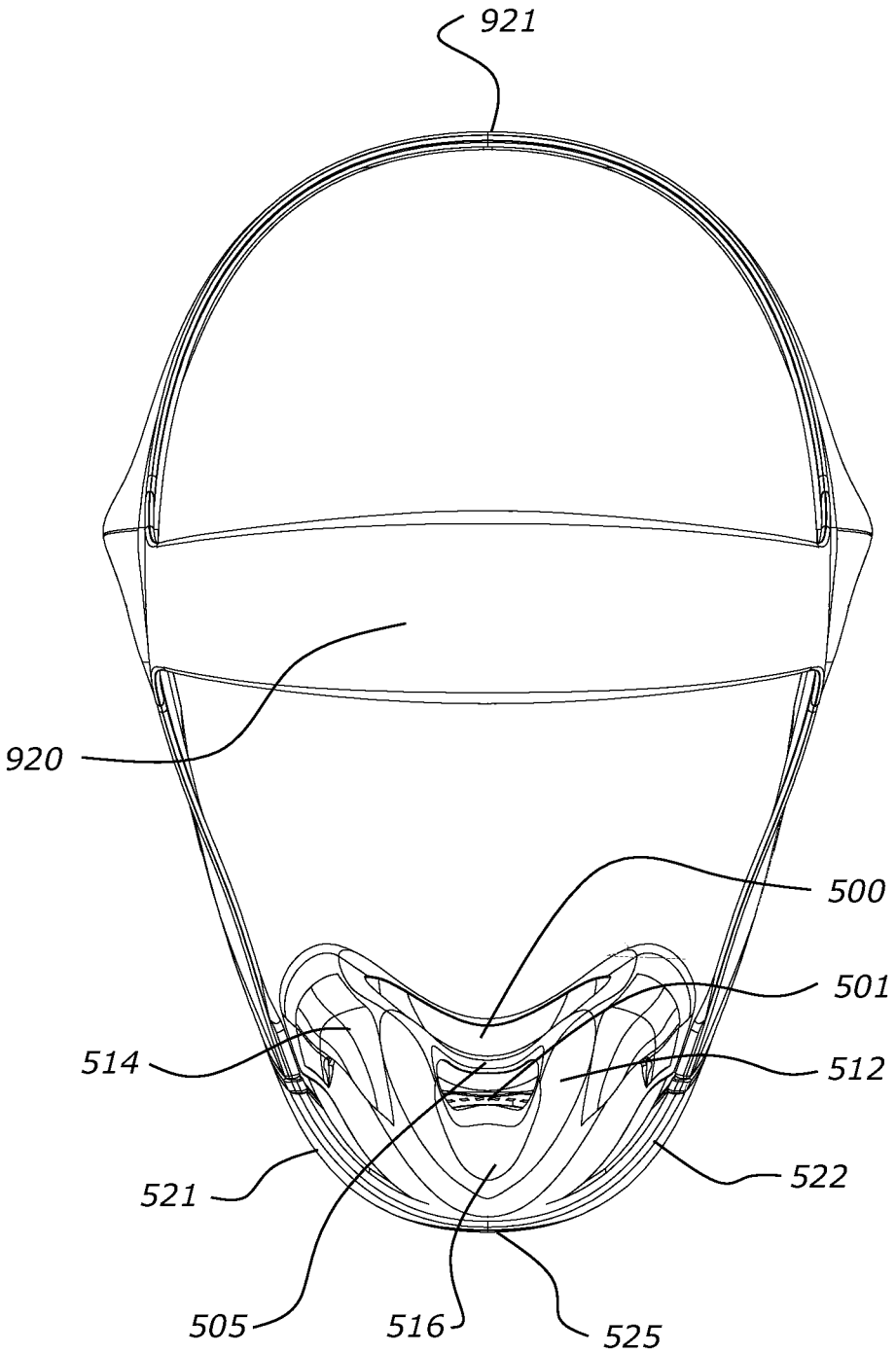

FIGURE 11C

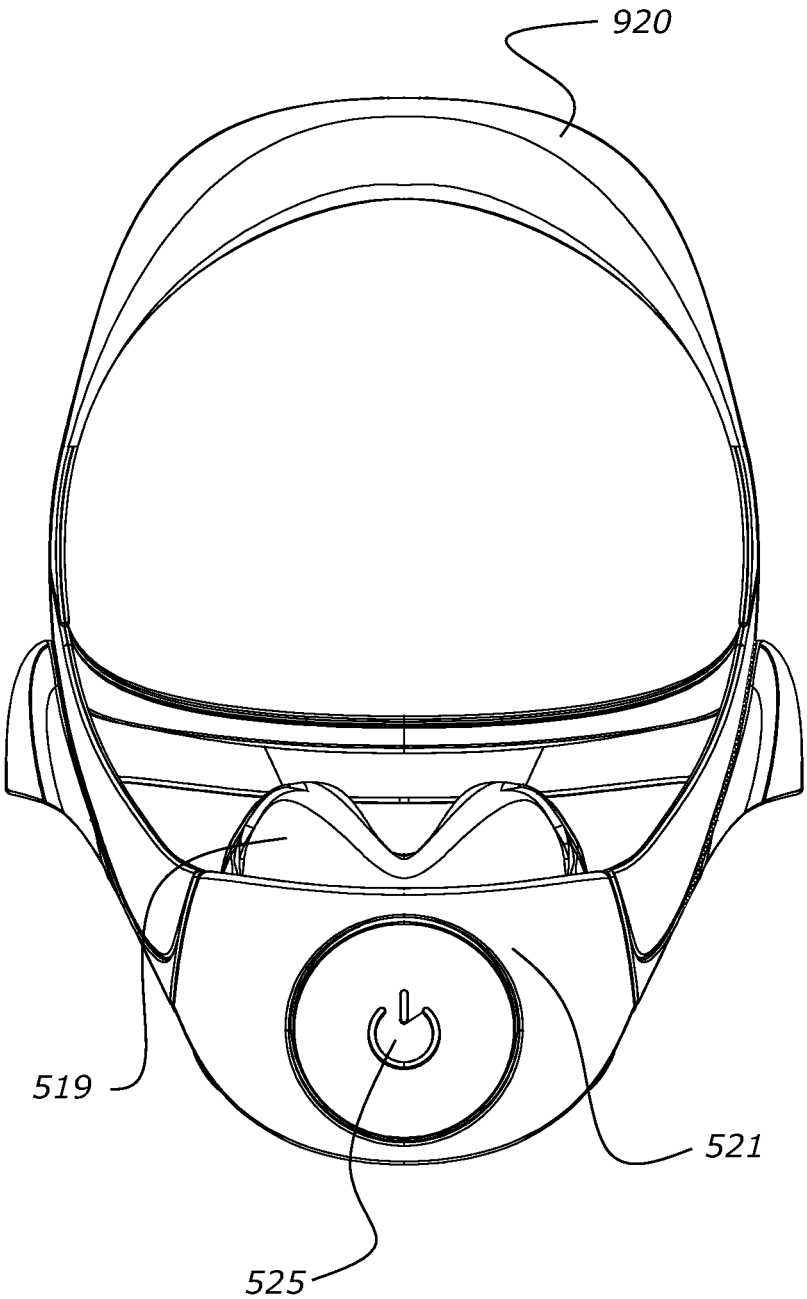

FIGURE 11D

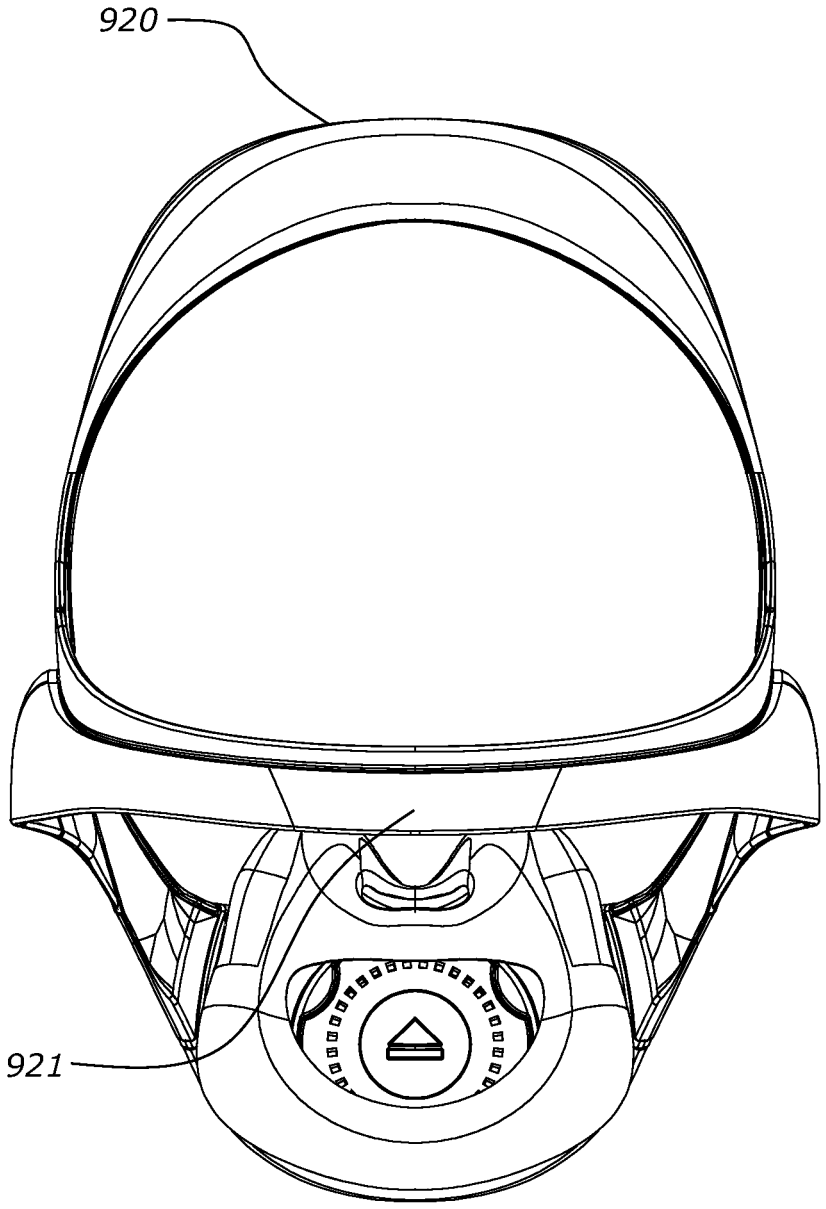

FIGURE 11E

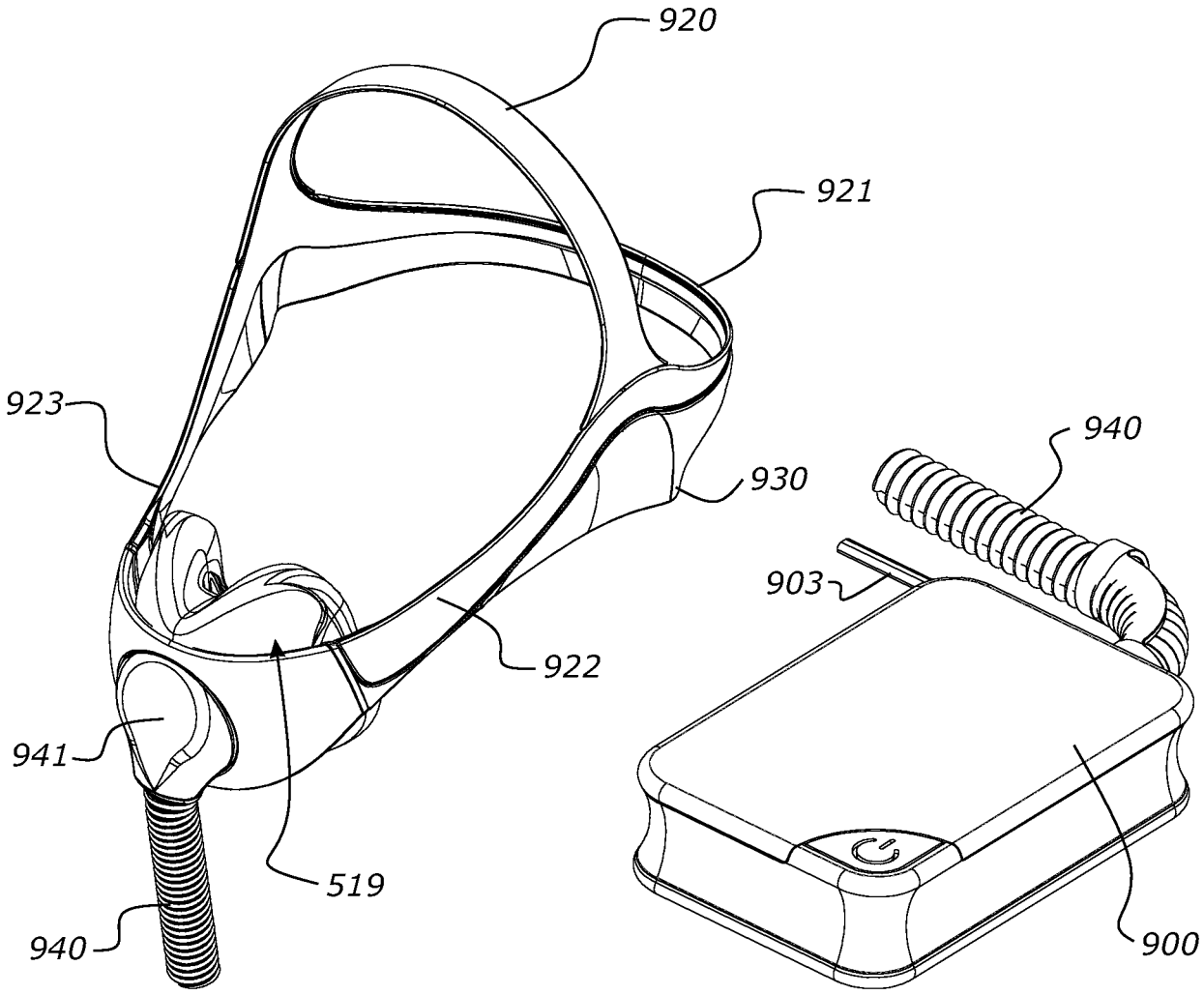

FIGURE 12

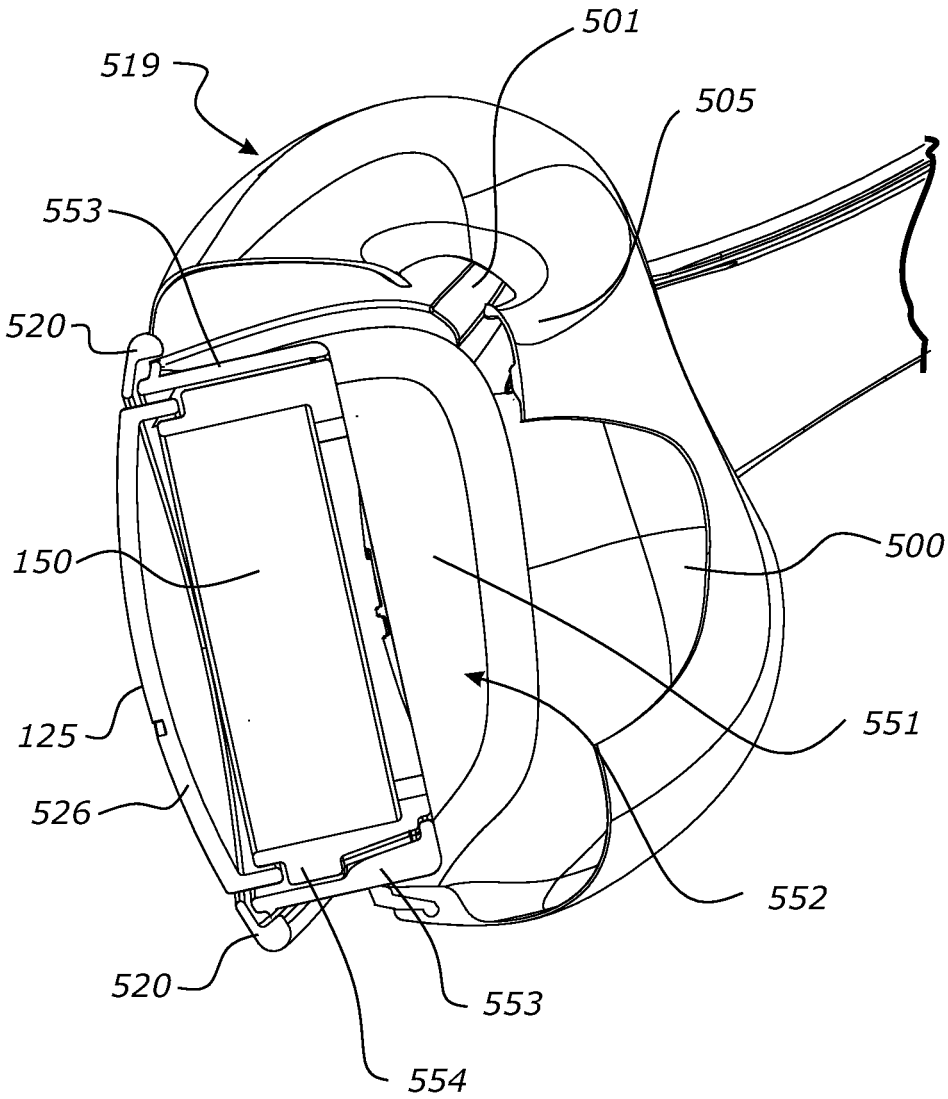

FIGURE 13

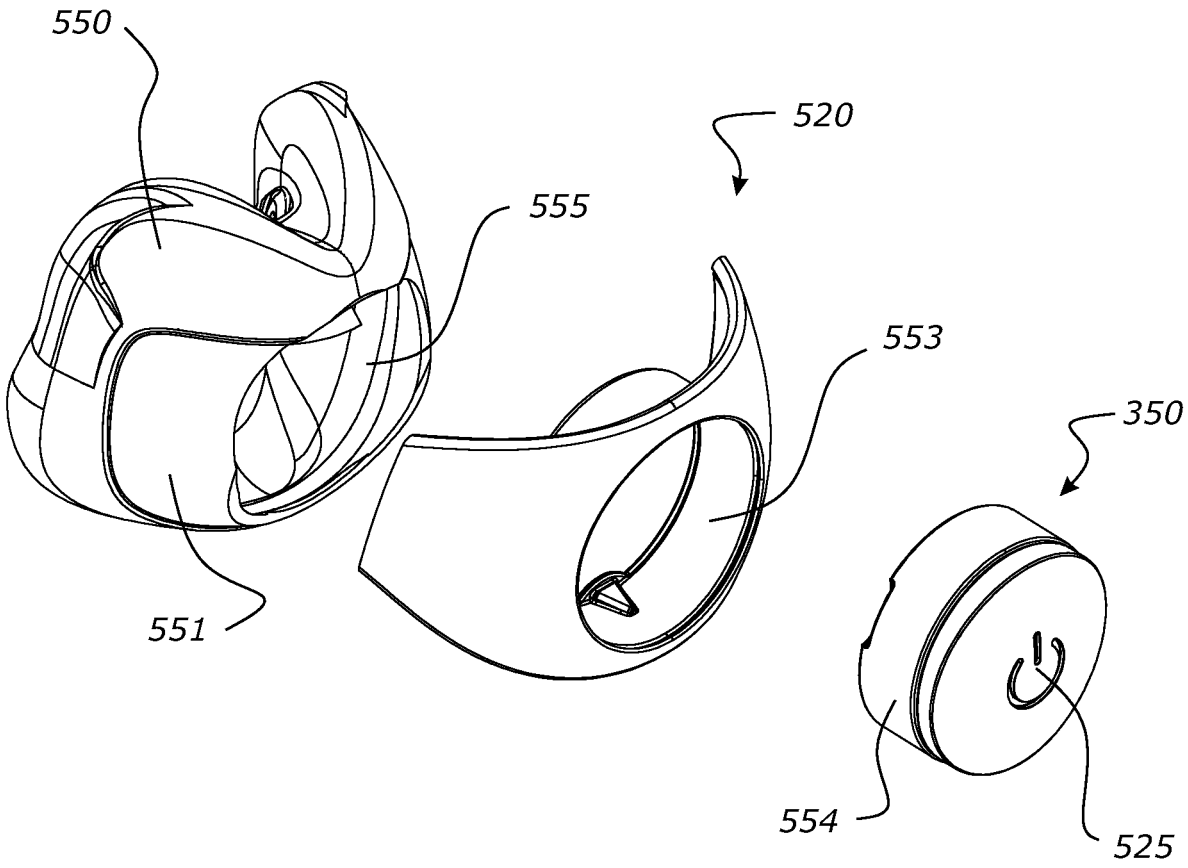

FIGURE 14A

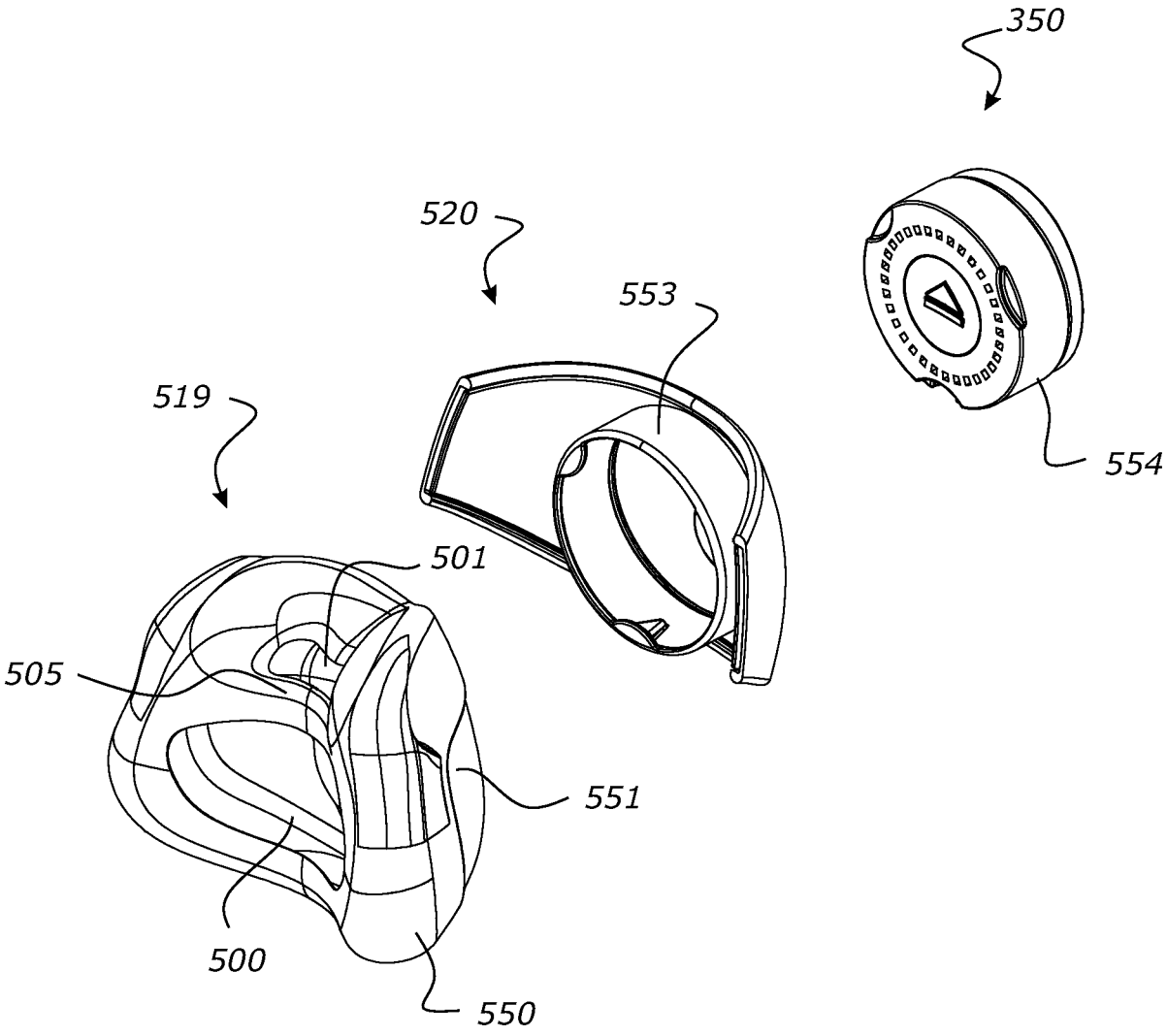

FIGURE 14B