20020283 63

16 MAY 2002

162162

(12) INTERNATIONAL APPLICATION PUBLISHED UNDER THE PATENT COOPERATION TREATY (PCT)

(19) World Intellectual Property Organization
International Bureau

(43) International Publication Date
7 June 2001 (07.06.2001)

PCT

(10) International Publication Number
WO 01/39748 A3

(51) International Patent Classification[7]: A61K 9/20, 9/48

(21) International Application Number: PCT/GB00/04378

(22) International Filing Date:
20 November 2000 (20.11.2000)

(25) Filing Language: English

(26) Publication Language: English

(30) Priority Data:
9928511.6 3 December 1999 (03.12.1999) GB

(71) Applicant *(for all designated States except US)*: **QINETIQ LIMITED** [GB/GB]; 85 Buckingham Gate, GB-London SW1 6TD (GB).

(72) Inventors; and

(75) Inventors/Applicants *(for US only)*: **CANHAM, Leigh, Trevor** [GB/GB]; DERA Malvern, St. Andrews Road, Malvern, Worcestershire WR14 3PS (GB). **WARD, Michael, Charles, Leslie** [GB/GB]; DERA Malvern, St. Andrews Road, Malvern, Worcestershire WR14 3PS (GB).

(74) Agent: **BOWDERY, A., O.**; Qinetiq Limited, IP Formalities, A4 Bldg., Cody Technology Park, Ively Road, Farnborough, Hampshire GU14 0LX (GB).

(81) Designated States *(national)*: AE, AG, AL, AM, AT, AU, AZ, BA, BB, BG, BR, BY, BZ, CA, CH, CN, CR, CU, CZ, DE, DK, DM, DZ, EE, ES, FI, GB, GD, GE, GH, GM, HR, HU, ID, IL, IN, IS, JP, KE, KG, KP, KR, KZ, LC, LK, LR, LS, LT, LU, LV, MA, MD, MG, MK, MN, MW, MX, MZ, NO, NZ, PL, PT, RO, RU, SD, SE, SG, SI, SK, SL, TJ, TM, TR, TT, TZ, UA, UG, US, UZ, VN, YU, ZA, ZW.

(84) Designated States *(regional)*: ARIPO patent (GH, GM, KE, LS, MW, MZ, SD, SL, SZ, TZ, UG, ZW), Eurasian patent (AM, AZ, BY, KG, KZ, MD, RU, TJ, TM), European patent (AT, BE, CH, CY, DE, DK, ES, FI, FR, GB, GR, IE, IT, LU, MC, NL, PT, SE, TR), OAPI patent (BF, BJ, CF, CG, CI, CM, GA, GN, GW, ML, MR, NE, SN, TD, TG).

Published:
— *with international search report*

(88) Date of publication of the international search report:
3 January 2002

For two-letter codes and other abbreviations, refer to the "Guidance Notes on Codes and Abbreviations" appearing at the beginning of each regular issue of the PCT Gazette.

(54) Title: ORALLY ADMINISTRABLE PHARMACEUTICAL PRODUCT AND METHOD OF FABRICATION THEREFOR

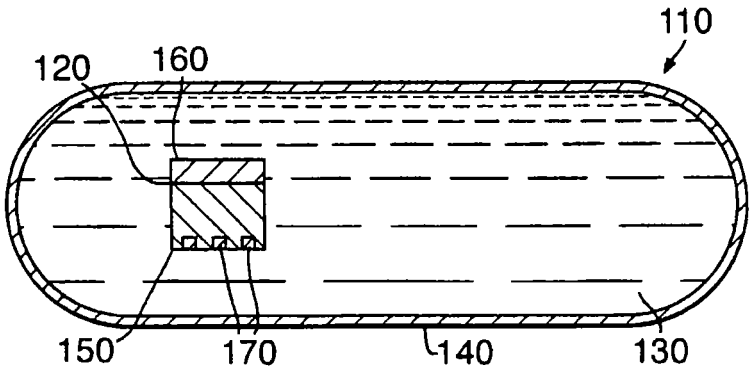

(57) Abstract: An orally administrable pharmaceutical product comprising an information carrier having a form and composition such that information is recorded by the carrier; wherein the information carrier comprises a resistant material that is resistant to the gastric environment. The presence of the information carrier facilitates the treatment of overdose patients who have consumed large quantities of the pharmaceutical product. The information may relate to the characteristics of the product and may be recorded by engraving characters into the information carrier.

WO 01/39748 A3

ACTION