13 May 2005

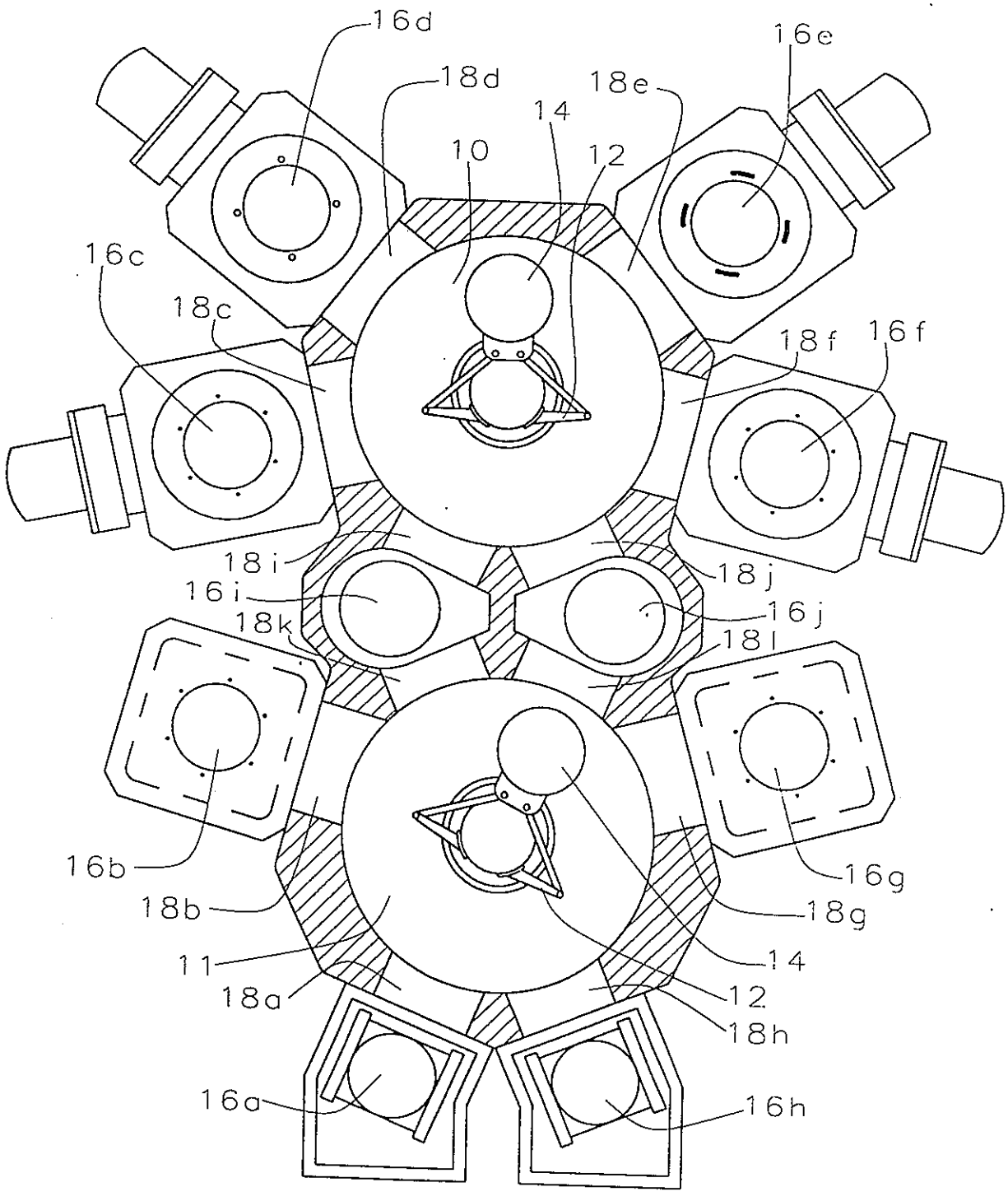

FIG. 1 Prior Art

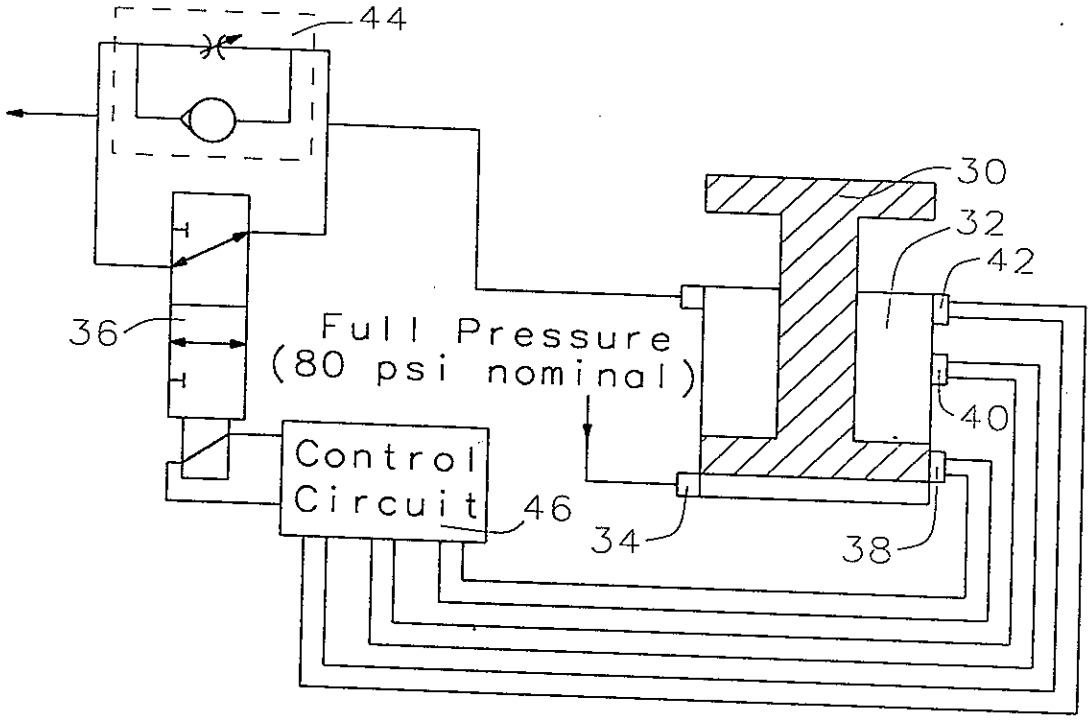
44
30
32
42
36
Full Pressure
(80 psi nominal)
40
Control
Circuit
46
34
38

FIG. 2A

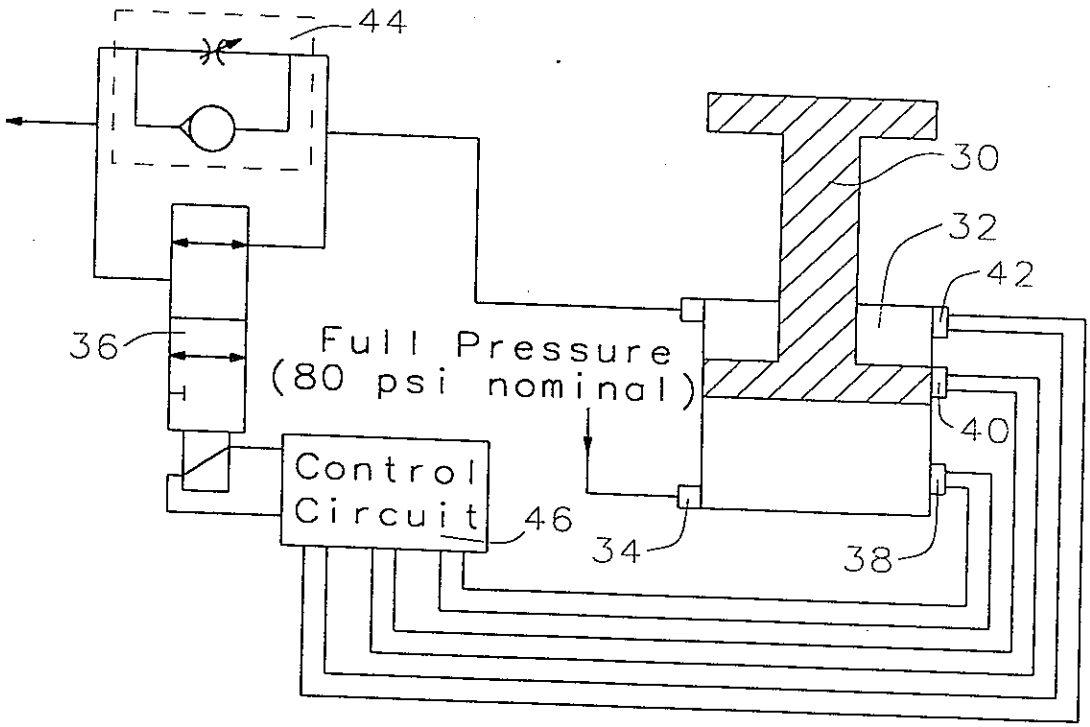
44
30
32
42
36
Full Pressure
(80 psi nominal)
40
Control
Circuit
46
34
38

FIG. 2B

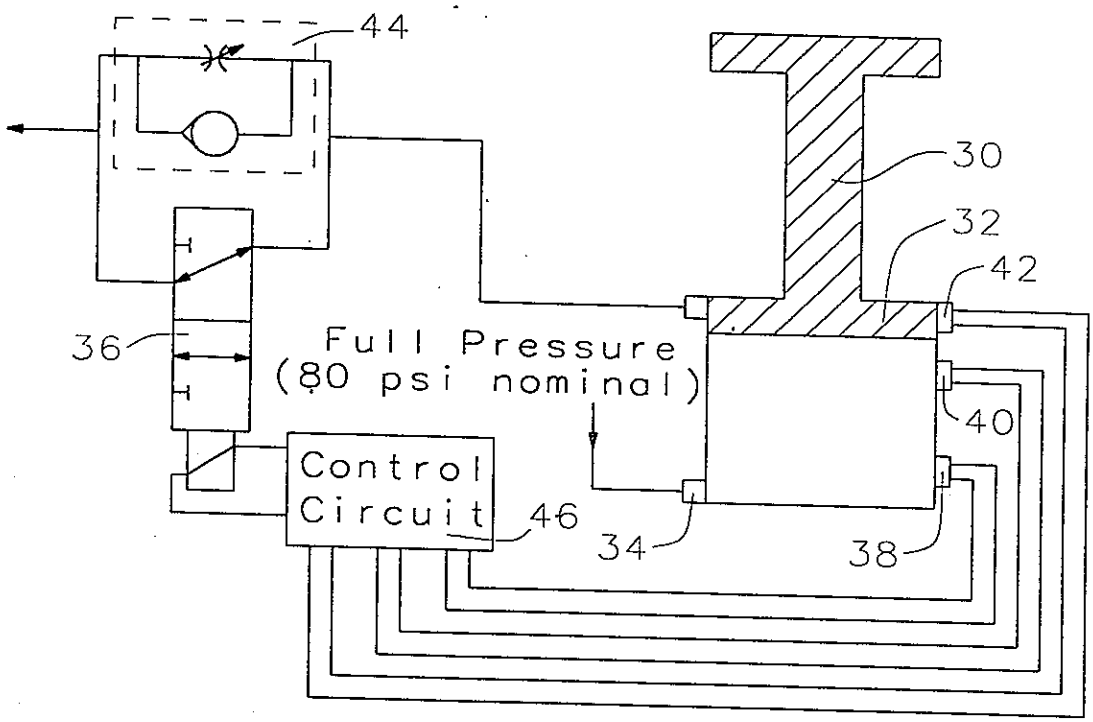
44
30
32
42
36
Full Pressure
(80 psi nominal)
40
Control
Circuit
46
34
38

FIG. 2C

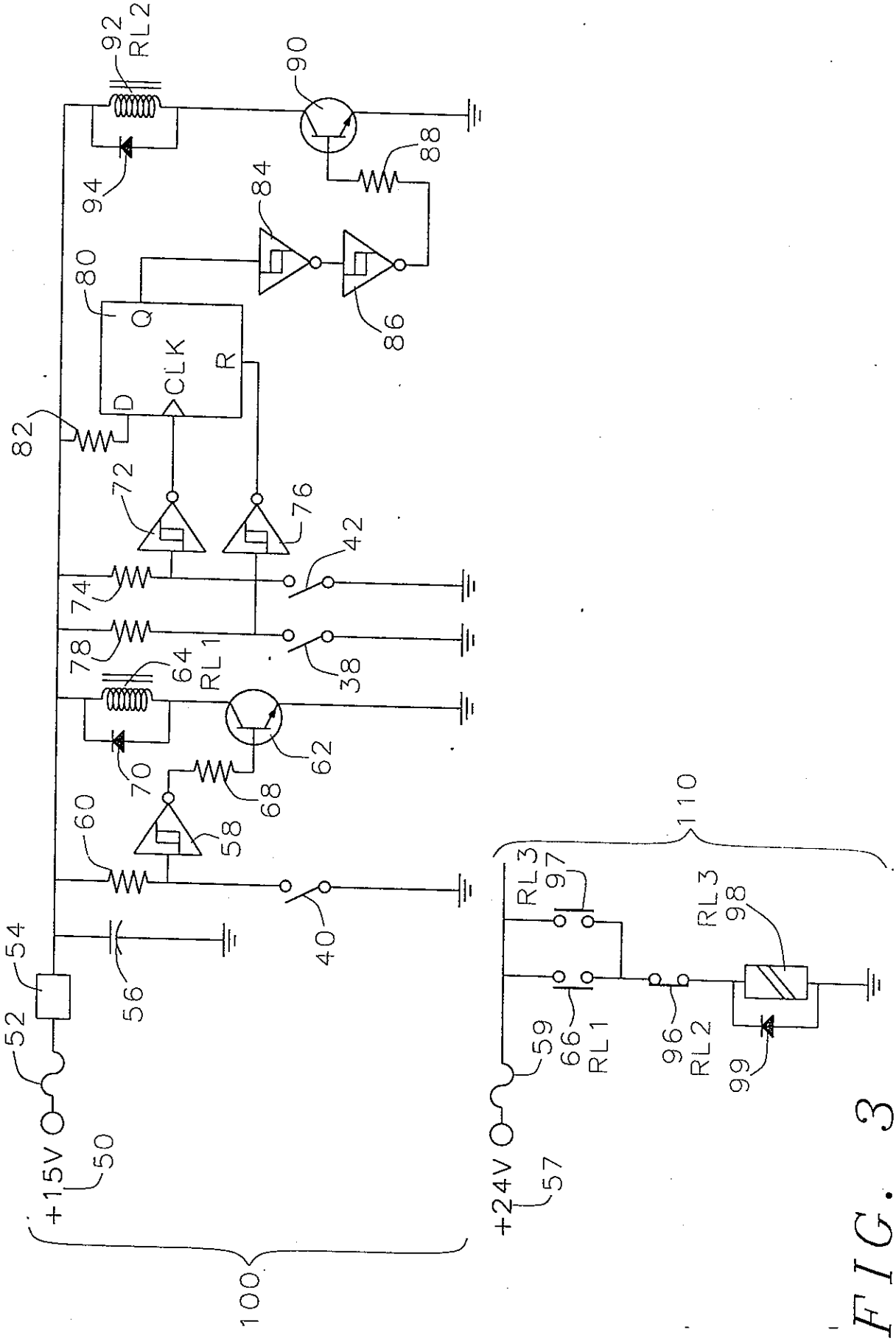
92
RL2
90
94
88
84
80
86
Q
CLK
R
D
82
72
76
42
74
78
64
RL 1
38
70
62
68
60
58
40
54
56
52
+15V
50
100
110
RL3
97
RL3
98
59
66
RL 1
96
RL2
99
+24V
57

FIG. 3