9902564-5 IPD

PCT WORLD INTELLECTUAL PROPERTY ORGANIZATION
International Bureau

INTERNATIONAL APPLICATION PUBLISHED UNDER THE PATENT COOPERATION TREATY (PCT)

(51) International Patent Classification 6 : H02J 1/10 | A1

(11) International Publication Number: WO 98/26489

(43) International Publication Date: 18 June 1998 (18.06.98)

(21) International Application Number: PCT/US97/22217

(22) International Filing Date: 5 December 1997 (05.12.97)

(30) Priority Data:
08/761,888 9 December 1996 (09.12.96) US

(71) Applicant *(for all designated States except US)*: TARGET – HI–TECH ELECTRONICS LTD. [IL/IL]; HaArgaman 6, New Industrial Area, 42504 Netanya South (IL).

(71) Applicant *(for TJ only)*: FRIEDMAN, Mark, M. [US/IL]; Alharizi 1, 43406 Raanana (IL).

(72) Inventors; and
(75) Inventors/Applicants *(for US only)*: DAVID, Yair [IL/IL]; Ankor 6, 47229 Ramat Hasharon (IL). WITTNER, Lupu [IL/IL]; Rafael Enkave 9, 42100 Netanya (IL).

(74) Common Representative: FRIEDMAN, Mark, M.; c/o Castorina, Anthony, Suite 207, 2001 Jefferson Davis Highway, Arlington, VA 22202 (US).

(81) Designated States: AL, AM, AT, AU, AZ, BA, BB, BG, BR, BY, CA, CH, CN, CU, CZ, DE, DK, EE, ES, FI, GB, GE, GH, HU, IL, IS, JP, KE, KG, KP, KR, KZ, LC, LK, LR, LS, LT, LU, LV, MD, MG, MK, MN, MW, MX, NO, NZ, PL, PT, RO, RU, SD, SE, SG, SI, SK, SL, TJ, TM, TR, TT, UA, UG, US, UZ, VN, YU, ZW, ARIPO patent (GH, KE, LS, MW, SD, SZ, UG, ZW), Eurasian patent (AM, AZ, BY, KG, KZ, MD, RU, TJ, TM), European patent (AT, BE, CH, DE, DK, ES, FI, FR, GB, GR, IE, IT, LU, MC, NL, PT, SE), OAPI patent (BF, BJ, CF, CG, CI, CM, GA, GN, ML, MR, NE, SN, TD, TG).

Published
With international search report.

(54) Title: APPARATUS FOR AND METHOD OF EVENLY DISTRIBUTING AN ELECTRICAL LOAD ACROSS AN n–PHASE POWER DISTRIBUTION NETWORK

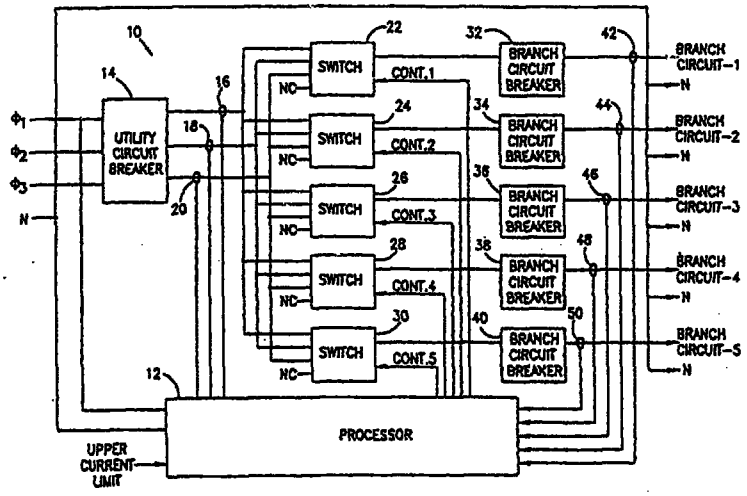

(57) Abstract

An apparatus for and method of evenly distributing an electrical load across an n–phase power distribution network. The current in each incoming phase ($\phi 1$, $\phi 2$, and $\phi 3$) and in each branch circuit (1–5) is measured by a current sensor (16, 18, 20, 42, 44, 46, 48 and 50). The outputs of the current sensors are monitored by a processor (12). Associated with each branch circuit is a multi–pole switch (22, 24, 26, 28 and 30) and a conventional circuit breaker (32, 34, 36, 38, 40). Each switch (22, 24, 26, 28 and 30) is able of connecting its corresponding branch circuit (1–5) to any incoming phase ($\phi 1$, $\phi 2$, and $\phi 3$), and of disconnecting the branch circuit (1–5) from all n phases ($\phi 1$, $\phi 2$, and $\phi 3$). The processor (12) periodically monitors currents flowing through each incoming phase and, based on branch circuit load conditions (1–5), reprograms the switches (22, 24 and 26) to keep the branch circuit loads (1–5) evenly distributed across all three incoming phases ($\phi 1$, $\phi 2$, and $\phi 3$).