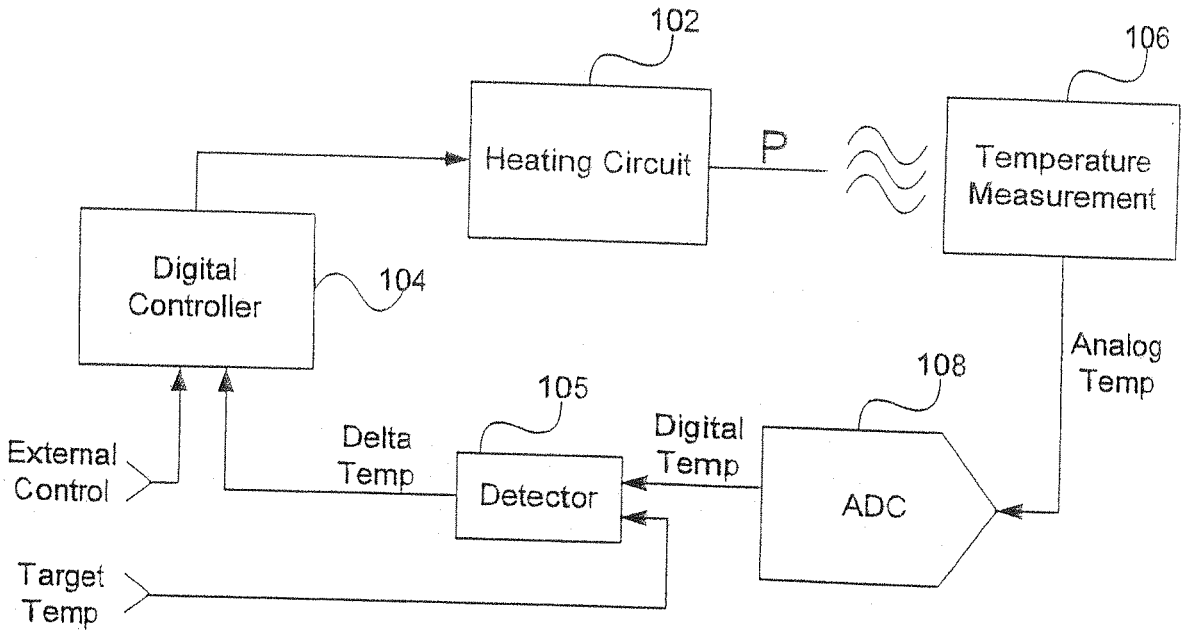
102
106
Heating Circuit
P
Temperature Measurement
Digital Controller
104
Analog Temp
108
105
External Control
Delta Temp
Digital Temp
Detector
ADC
Target Temp

FIG. 1

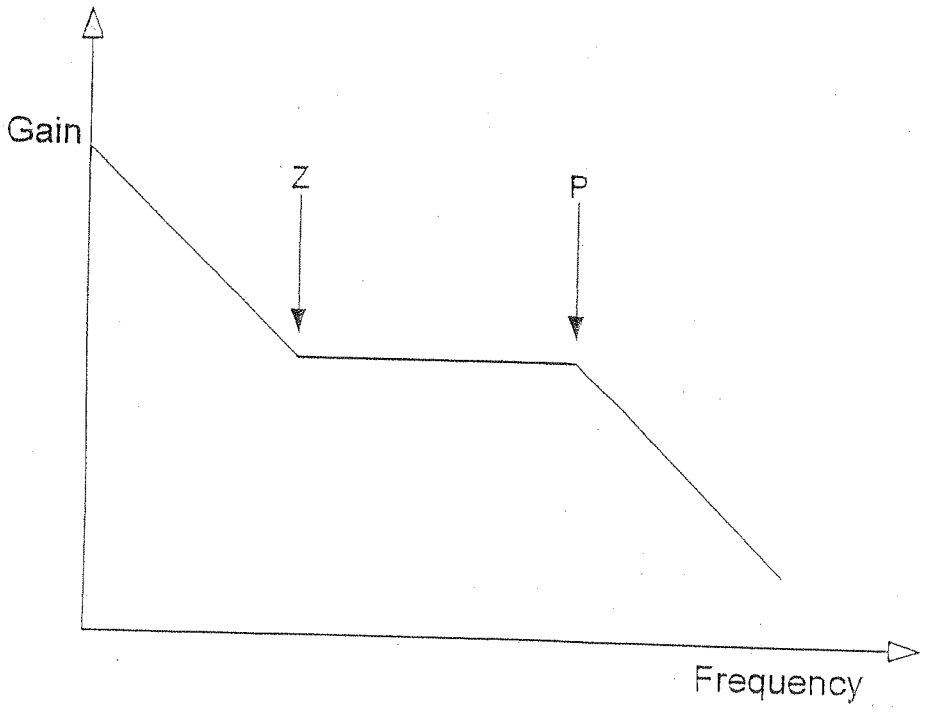
Gain
Z
P
Frequency

FIG. 2

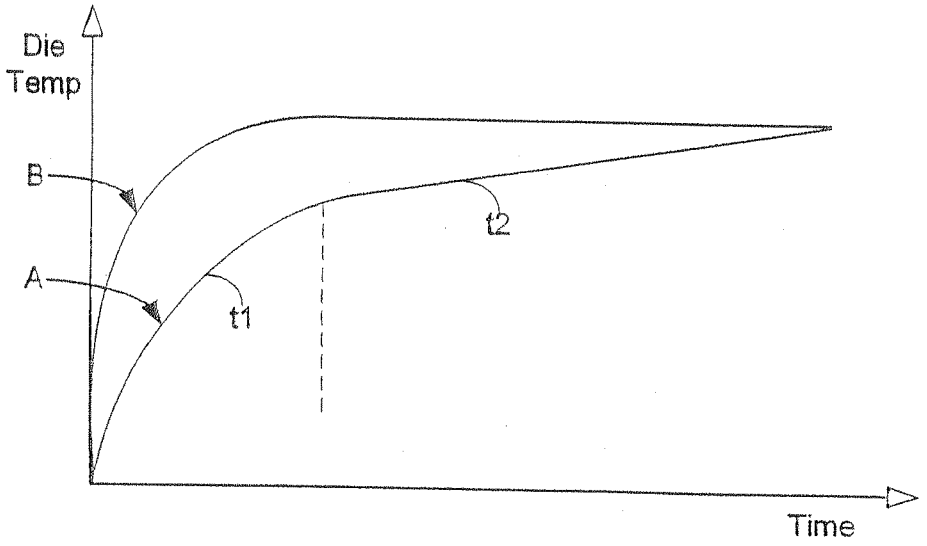

FIG. 3

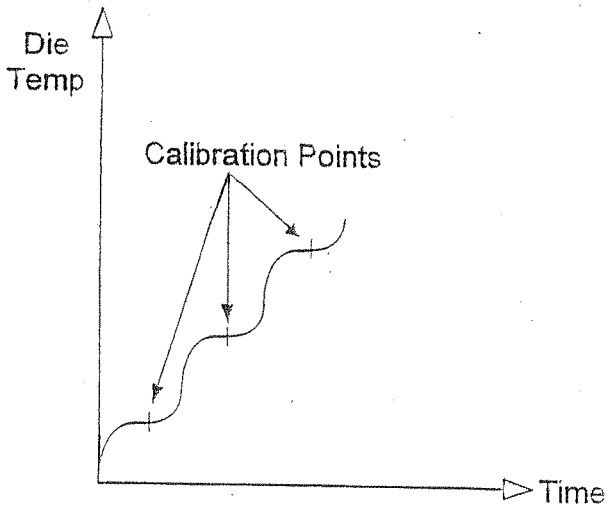

FIG. 4

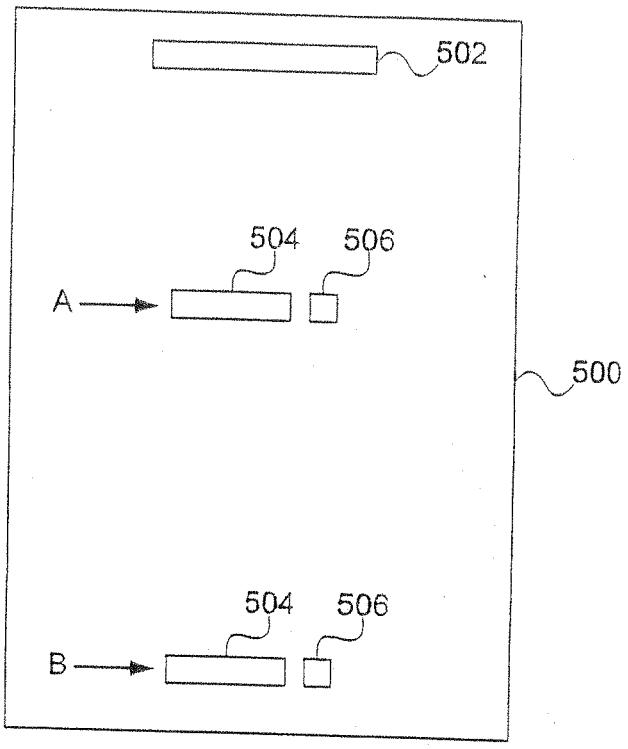
502
504
506
A
500
504
506
B

FIG. 5A

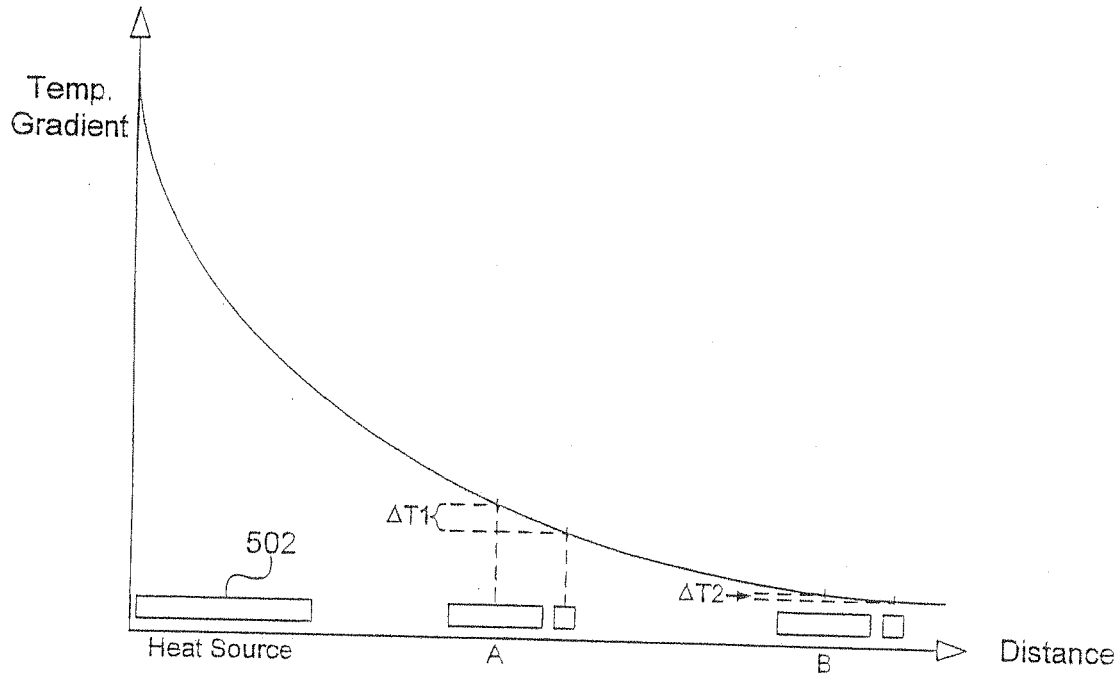
Temp.
Gradient
ΔT1
502
ΔT2
Heat Source
A
B
Distance

FIG. 5B

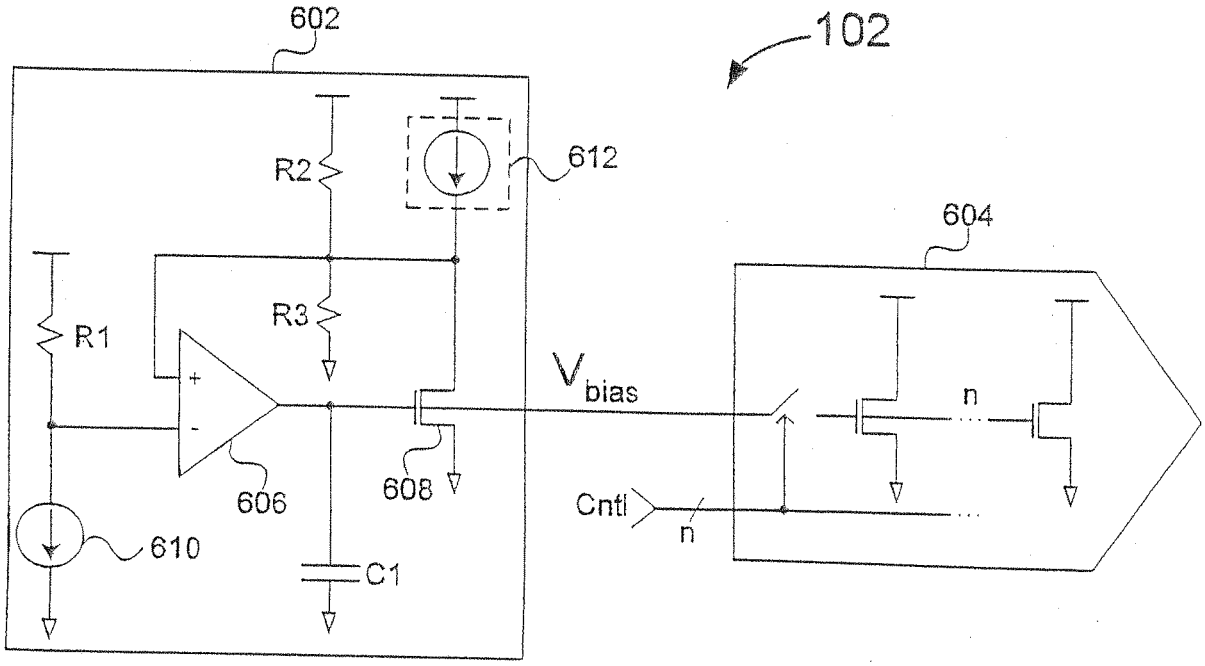

FIG. 6

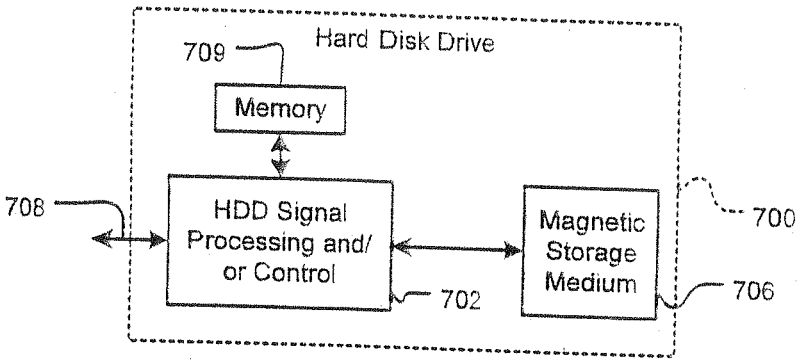
Hard Disk Drive
709
Memory
708
HDD Signal Processing and/ or Control
702
Magnetic Storage Medium
706
700

FIG. 7A

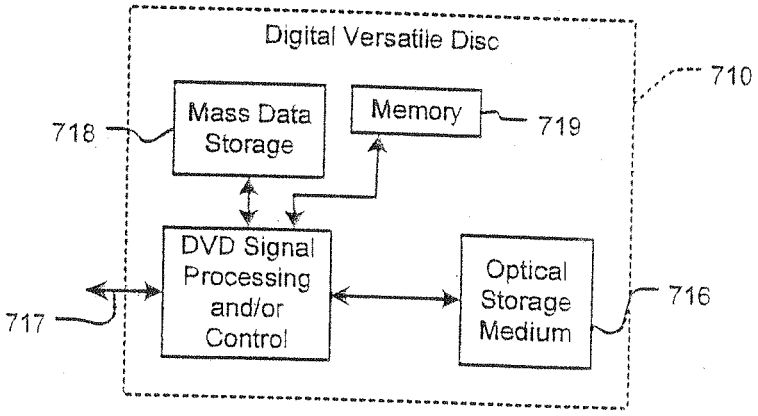
Digital Versatile Disc
710
718
Mass Data Storage
Memory
719
DVD Signal Processing and/or Control
717
Optical Storage Medium
716

FIG. 7B

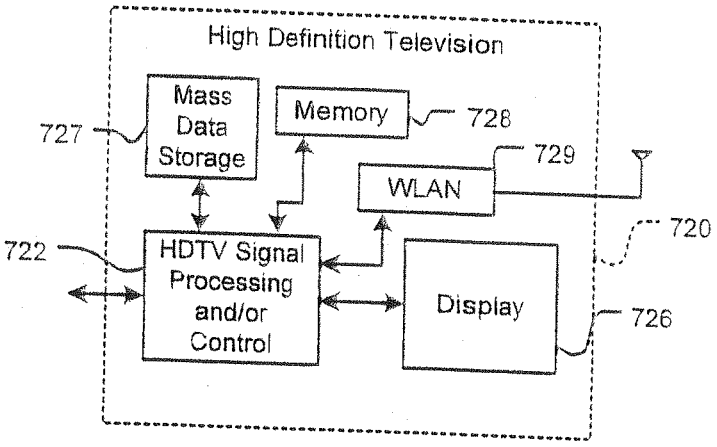
High Definition Television
Mass Data Storage
727
Memory
728
729
WLAN
720
722
HDTV Signal Processing and/or Control
Display
726

FIG. 7C

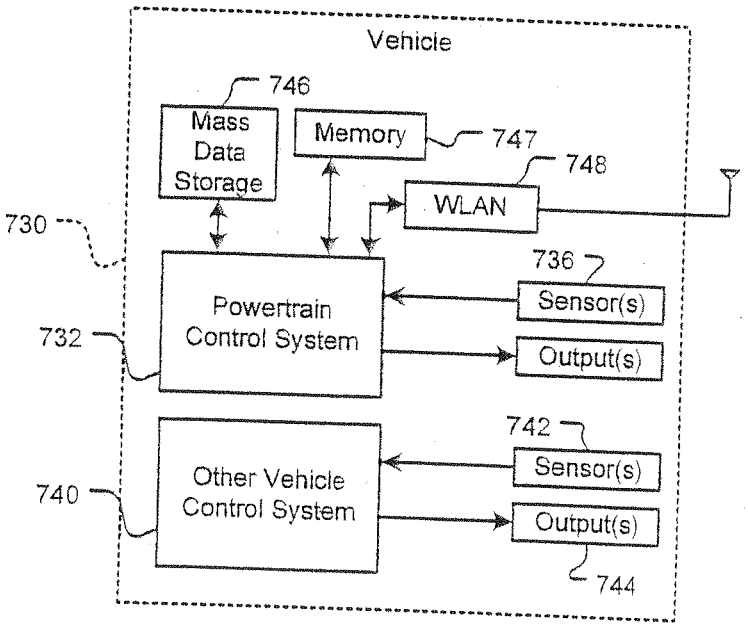
Vehicle
746
Mass Data Storage
Memory
747
748
WLAN
730
736
Sensor(s)
Powertrain Control System
732
Output(s)
742
Sensor(s)
Other Vehicle Control System
740
Output(s)
744

FIG. 7D

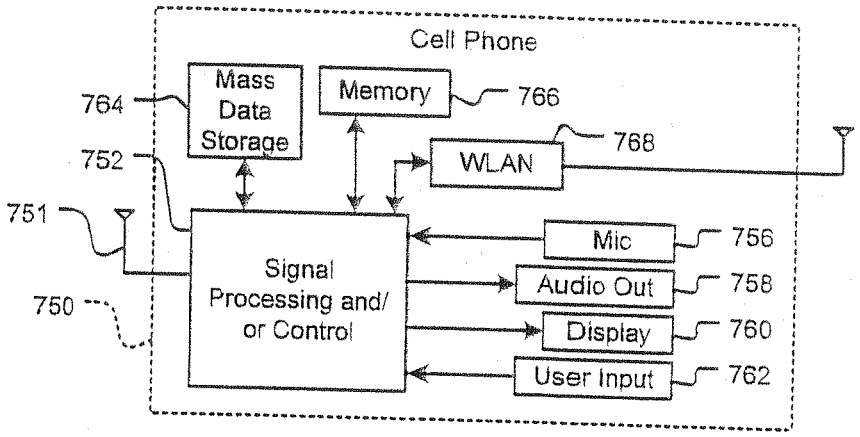
Cell Phone
Mass Data Storage
Memory
WLAN
Signal Processing and/ or Control
Mic
Audio Out
Display
User Input
764
766
768
752
751
750
756
758
760
762

FIG. 7E

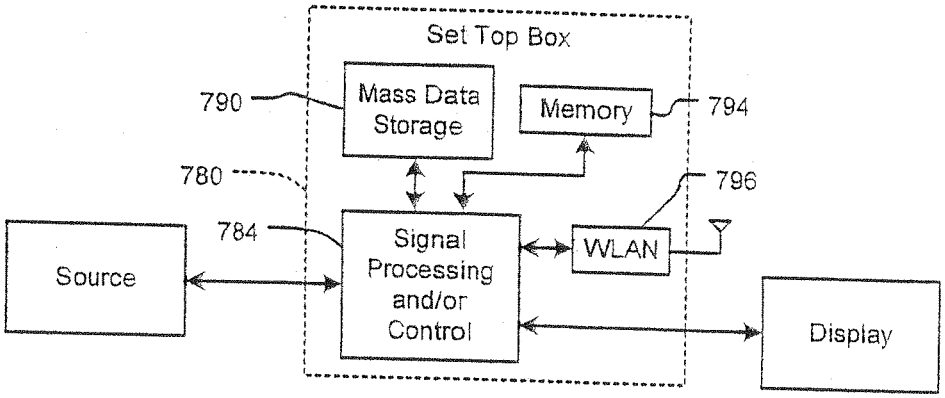
Set Top Box
Mass Data Storage
Memory
Signal Processing and/or Control
WLAN
Source
Display
790
794
780
796
784

FIG. 7F

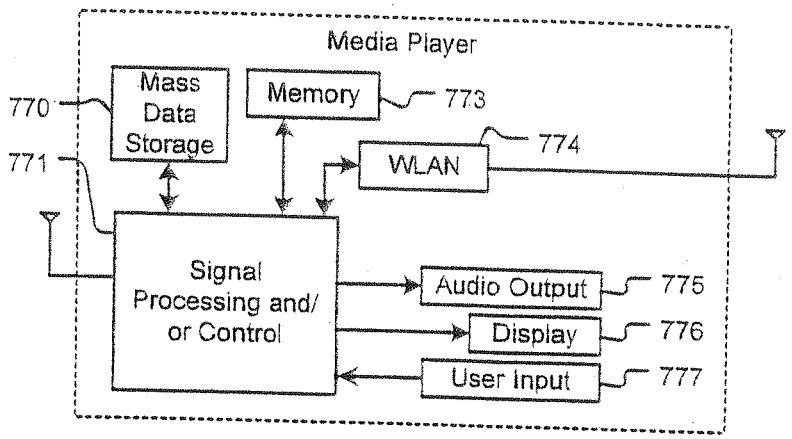
Media Player
770
Mass Data Storage
Memory
773
771
774
WLAN
Signal Processing and/ or Control
Audio Output
775
Display
776
User Input
777

FIG. 7G

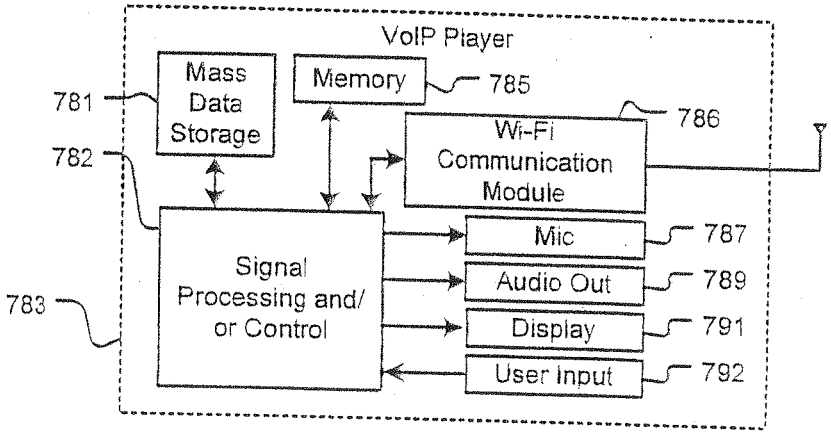
VoIP Player
781
Mass Data Storage
Memory
785
786
Wi-Fi Communication Module
782
Mic
787
Audio Out
789
783
Signal Processing and/ or Control
Display
791
User Input
792

FIG. 7H