1400

GRANT & REVOKE DATA ACCESS

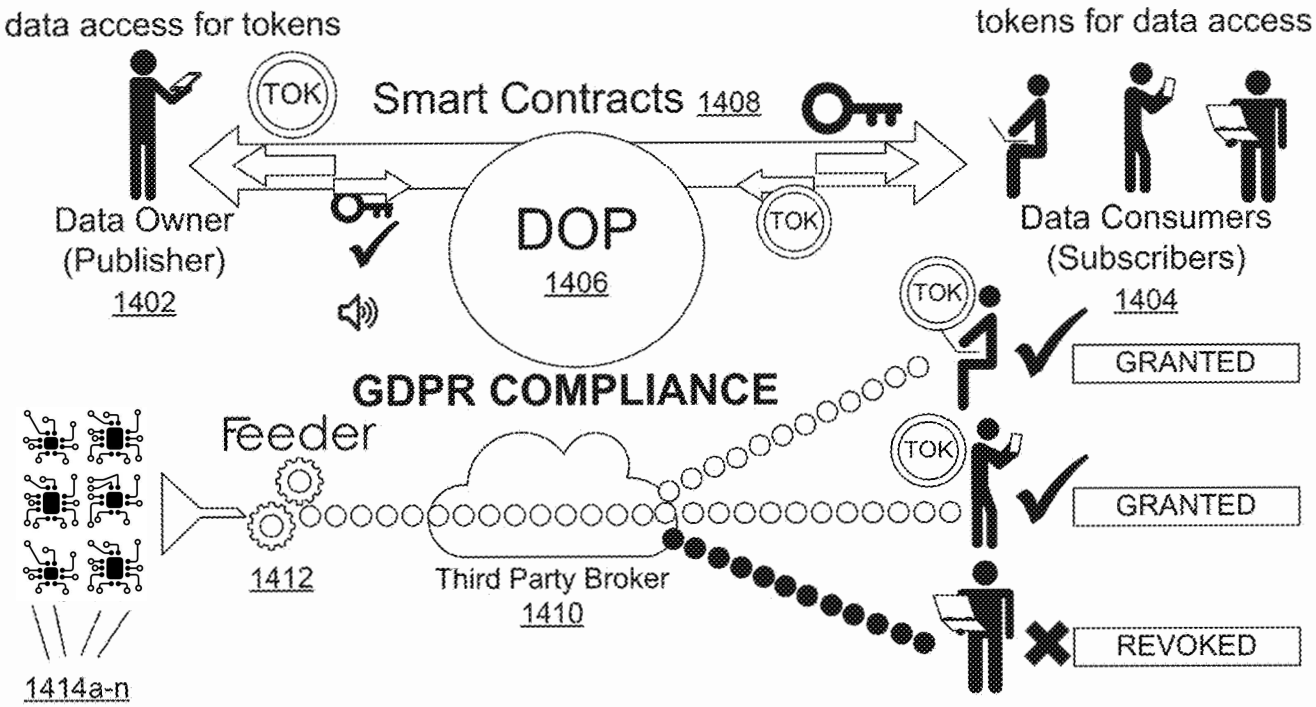

FIG. 14

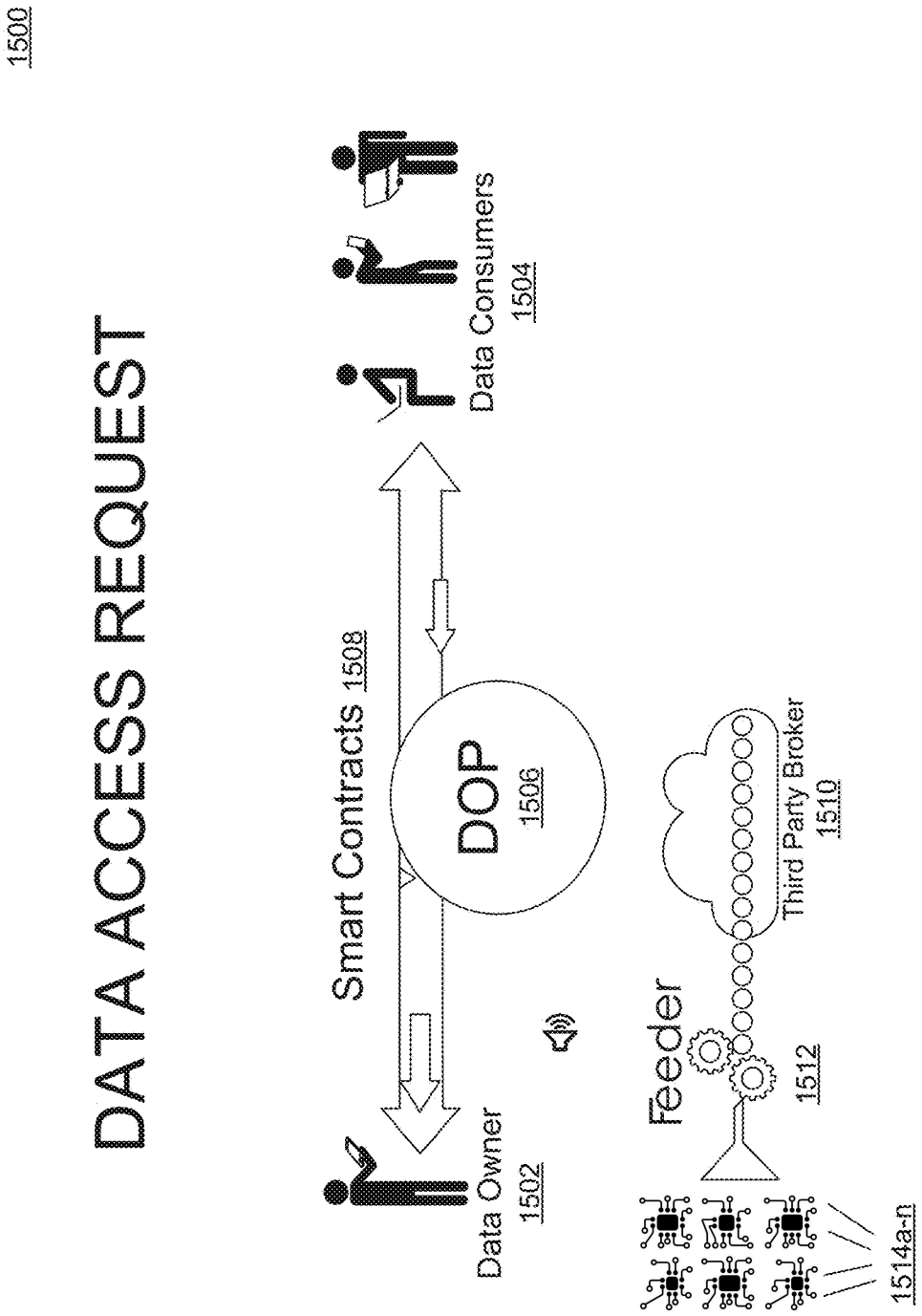
1500
DATA ACCESS REQUEST
Data Consumers
1504
Smart Contracts 1508
DOP
1506
Data Owner
1502
Feeder
1512
Third Party Broker
1510
1514a-n

FIG. 15

GRANT DATA ACCESS

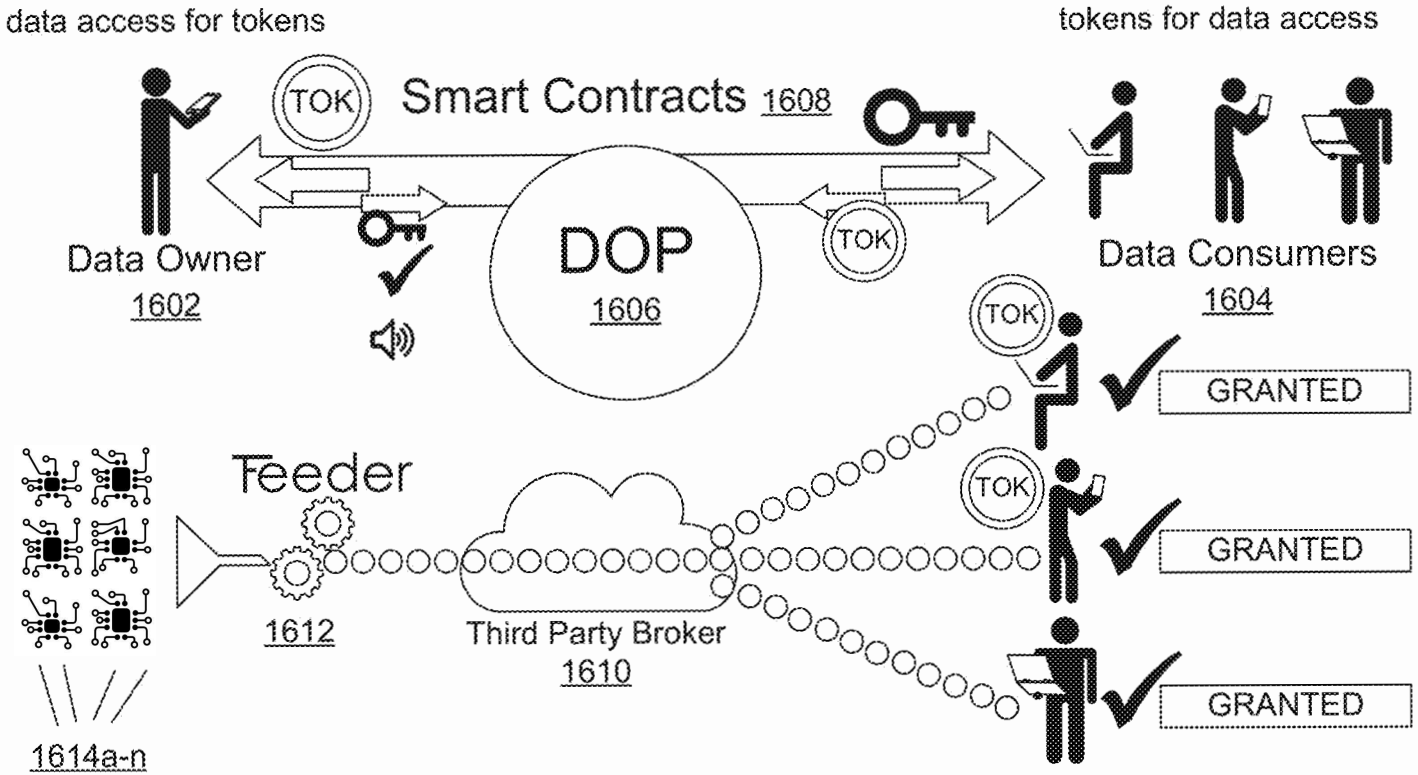

FIG. 16

AS NEEDED – REVOKE DATA ACCESS

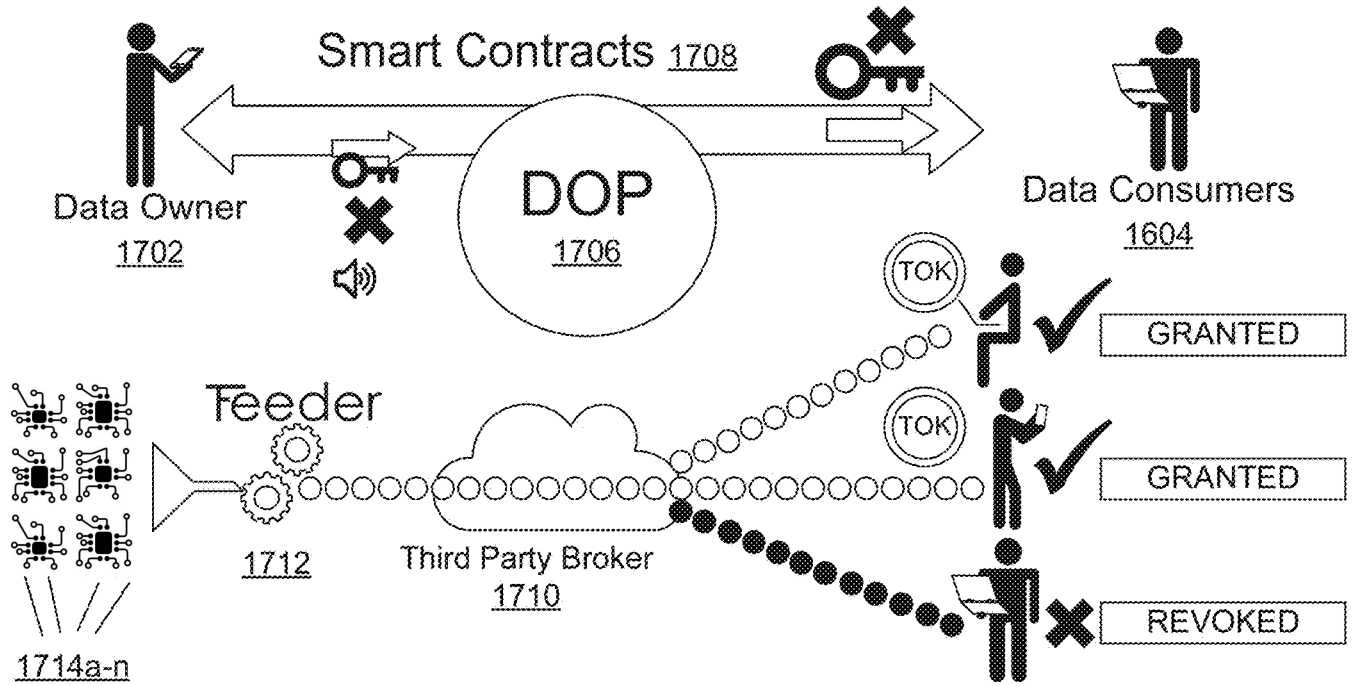

FIG. 17