FIG. 1

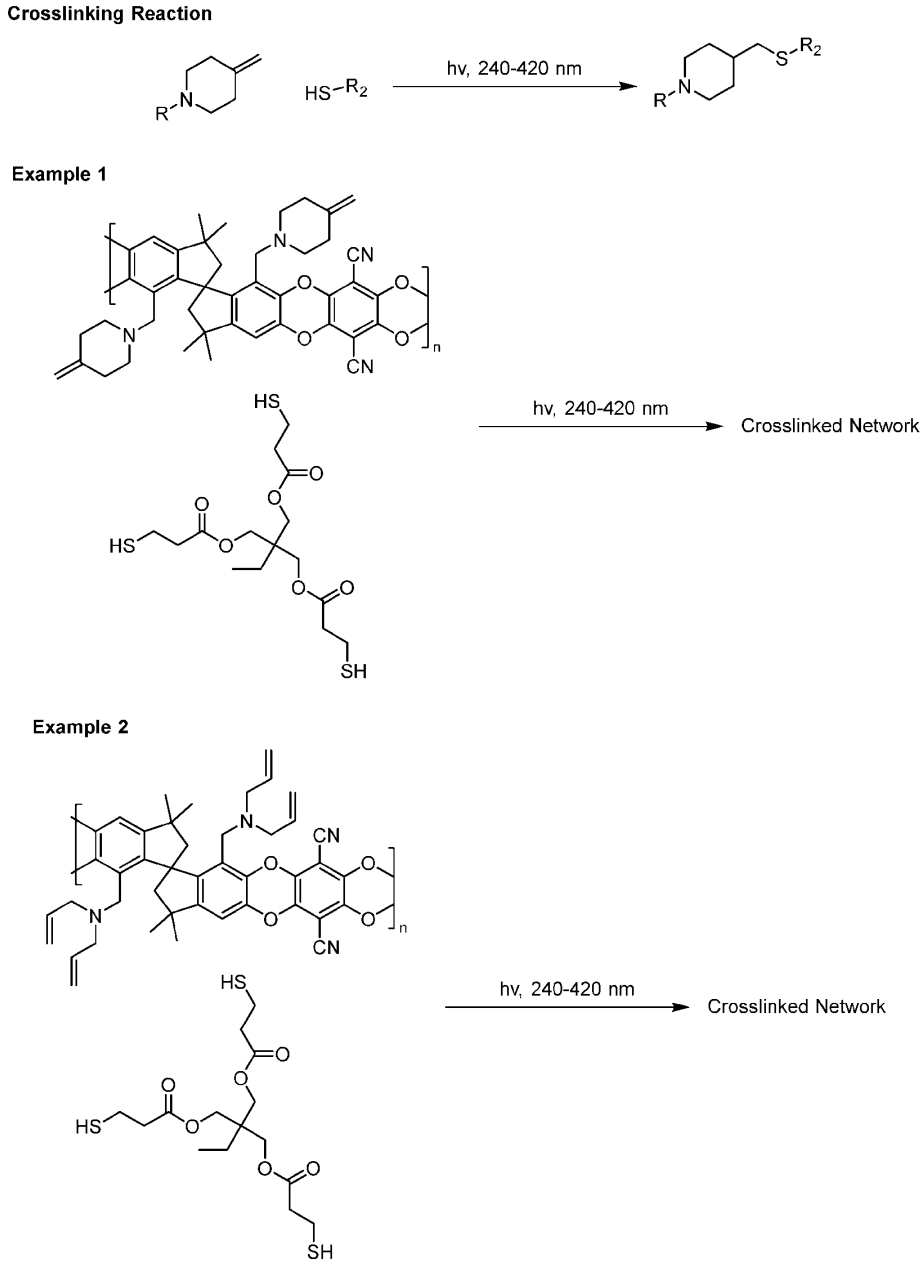
Crosslinking Reaction
hv, 240-420 nm
Example 1
hv, 240-420 nm
Crosslinked Network
Example 2
hv, 240-420 nm
Crosslinked Network

FIG. 2

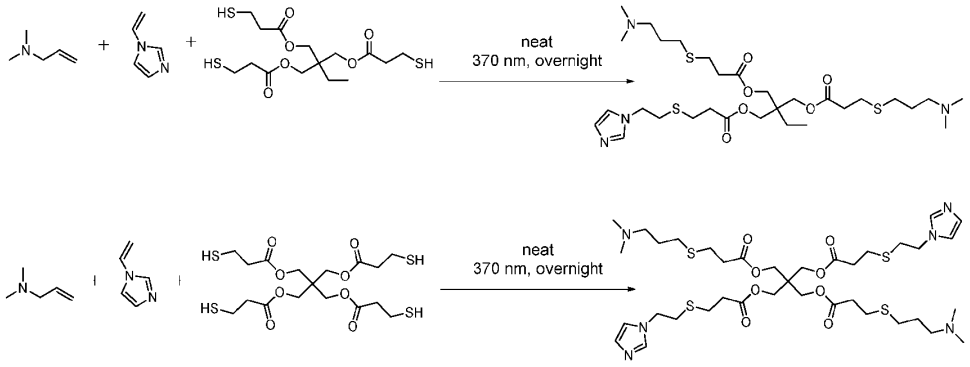

FIG. 3

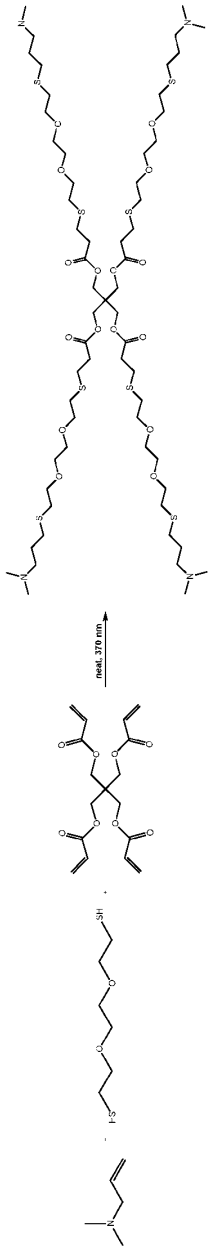

FIG. 4A

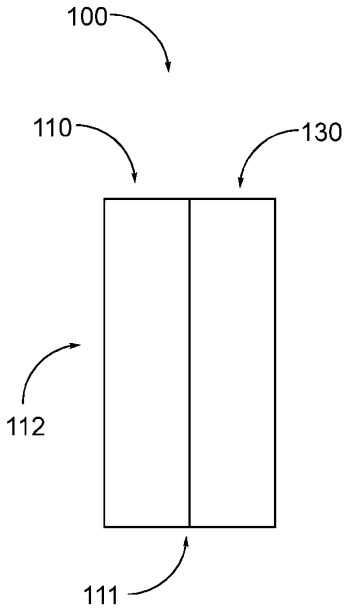

FIG. 4B

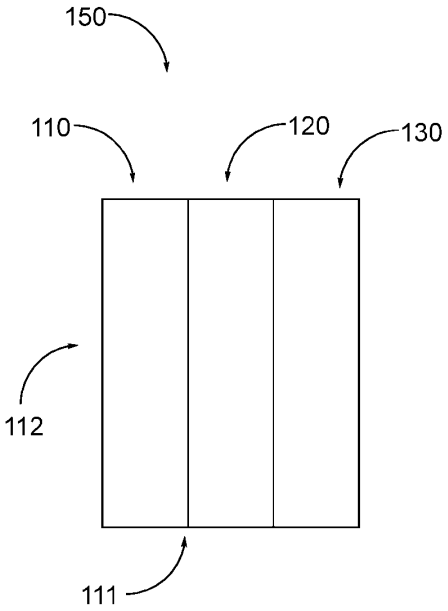

FIG. 5A

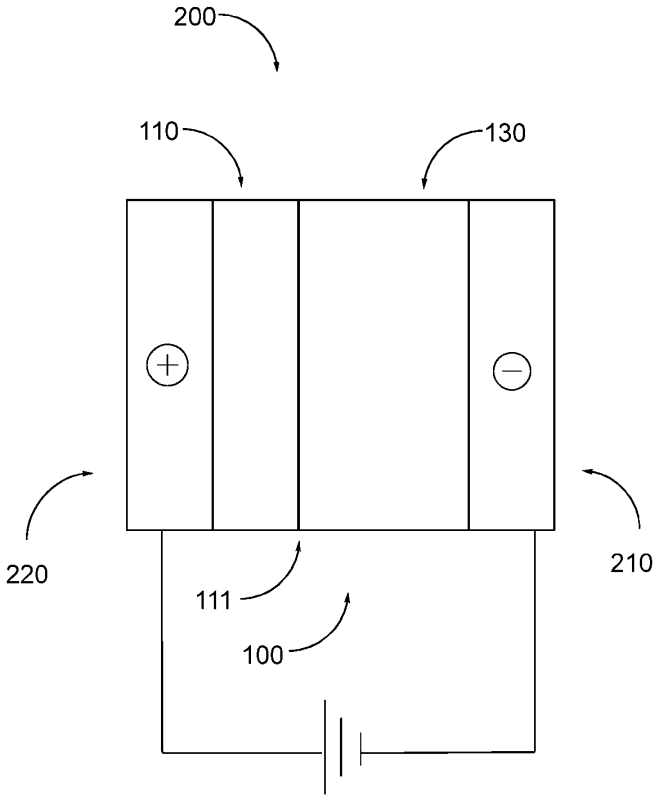

FIG. 5B

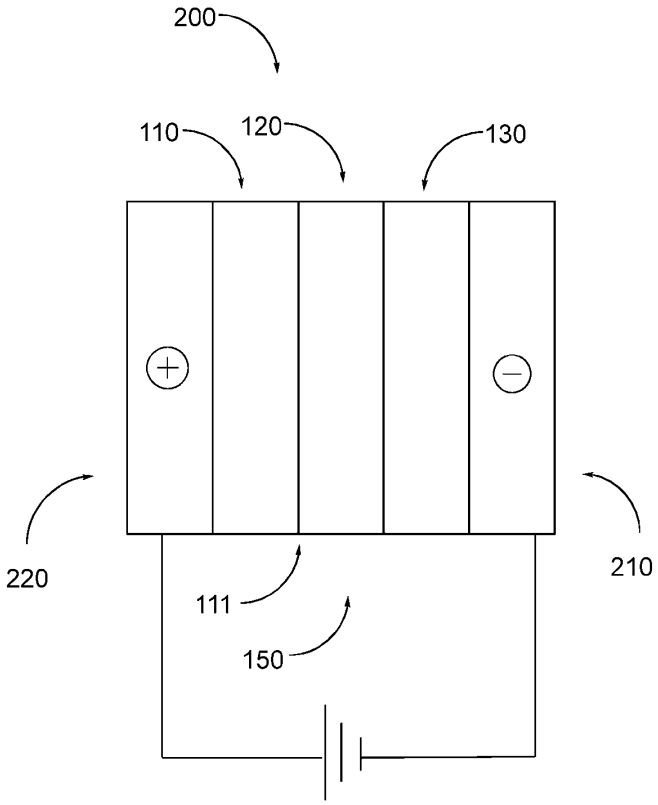

FIG. 6

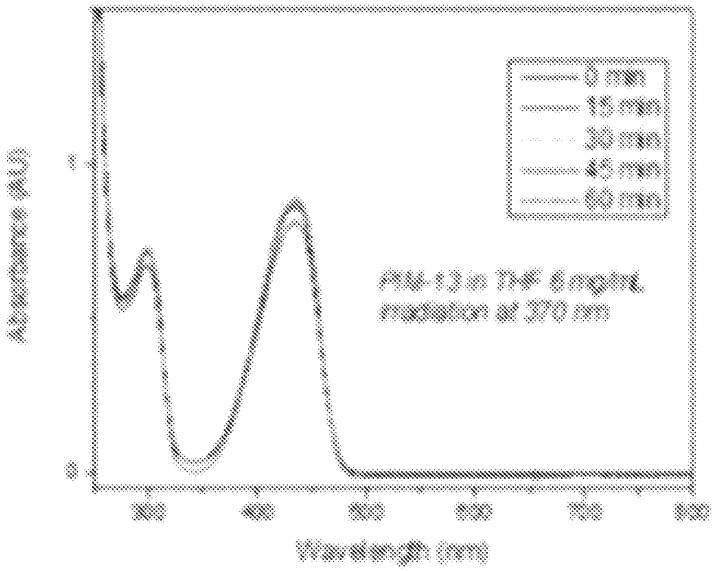
0 min
15 min
30 min
45 min
60 min

FIG. 7

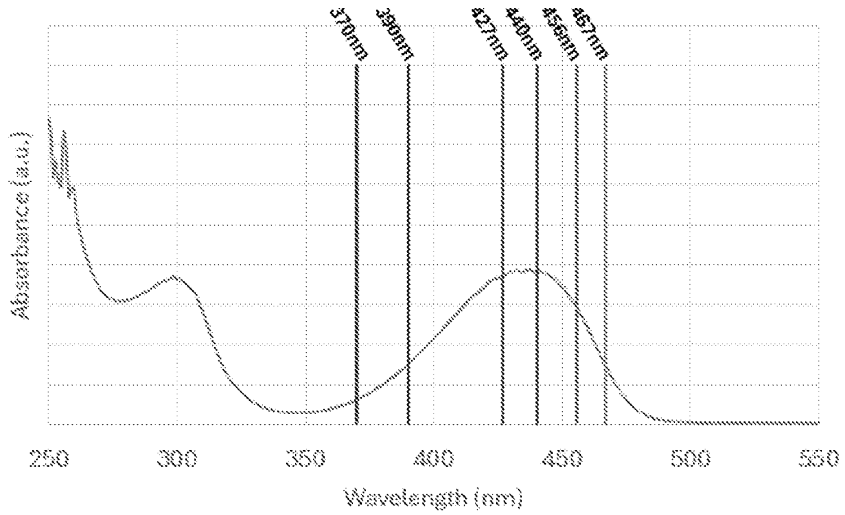
370nm
390nm
427nm
440nm
456nm
467nm
Absorbance (a.u.)
250
300
350
400
450
500
550
Wavelength (nm)