DRAWINGS

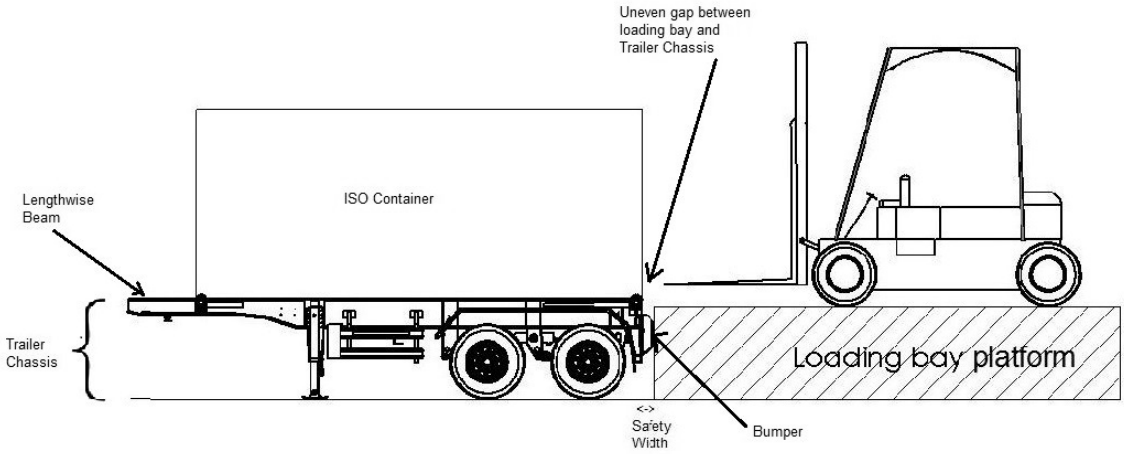

FIGURE 6

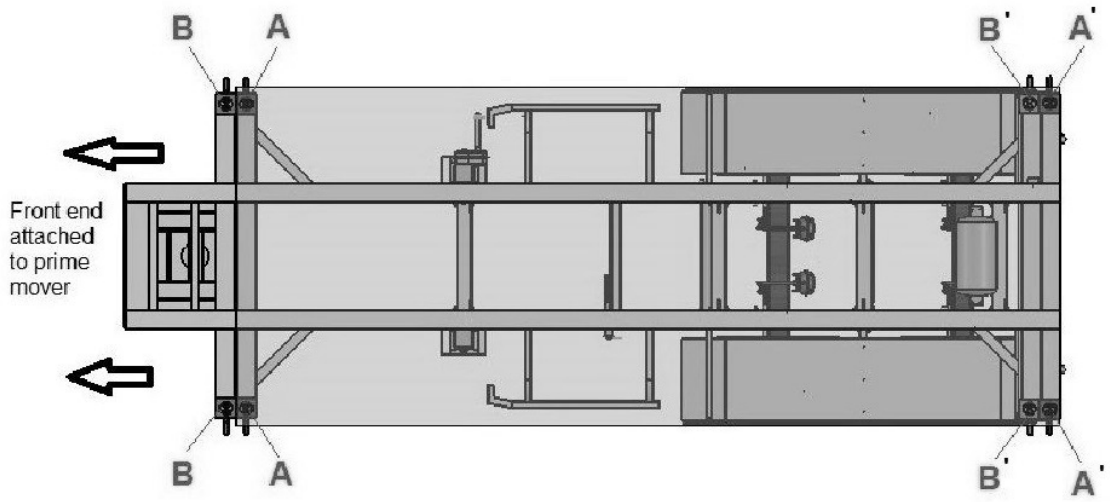

FIGURE 7

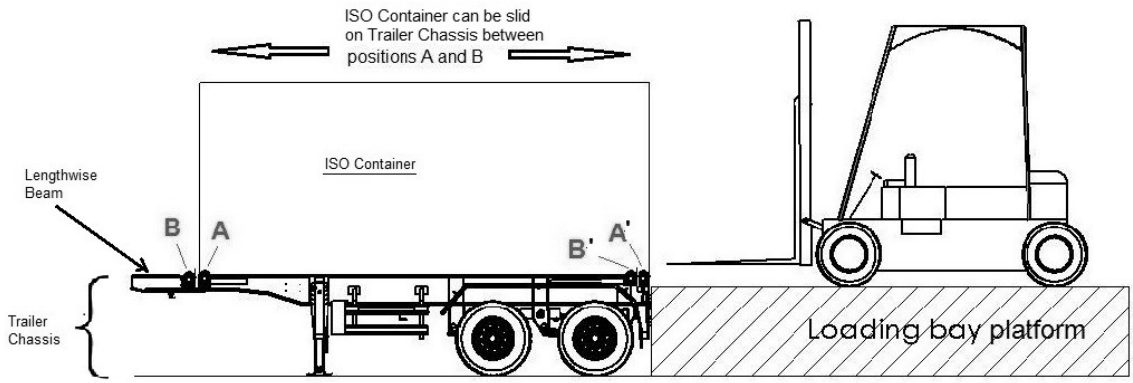
ISO Container can be slid
on Trailer Chassis between
positions A and B
ISO Container
Lengthwise
Beam
B
A
B'
A'
Trailer
Chassis
Loading bay platform

FIGURE 10