5'-OH, which then participates in the next coupling round, resulting in an oligonucleotide with a missing base (a deletion error). Over each successive cycle the deletion errors accumulate, resulting in a final product containing a complex mixture of oligonucleotides that would be extremely difficult to purity. In order to address the deletion error, typically, the phosphoramidite method includes a "capping" step in the cycle, whereby the coupling failures are removed from further participation in the synthesis. This is typically achieved by acetylation of the unreacted 5'-OH groups with acetic anhydride and N-methyl imidazole. This reagent reacts only with free hydroxyl groups to irreversibly cap the oligonucleotides in which coupling failed.

Typical oligonucleotide synthesis techniques do not give rise to 100% yields for each nucleotide addition step. Even with a yield of 99.5% per coupling round, the yields multiply over the length of a nucleic acid sequence and lead to significant difficulties in the provision of longer polynucleotides, such as full length genes and genomes, resulting in very low overall yields, and a waste of starting materials and intermediates, and the possibility of forming oligonucleotide mixtures at the end.

Accordingly, there remains a significant need in the art for methods of accurately and efficiently providing polynucleotides, in particular those of whole gene and genome scale.

Therefore, there is an urgent need for new technology to produce high-fidelity polynucleotides.

SUMMARY

In one aspect, the present disclosure refers to a process for the parallel synthesis of one or more oligonucleotides on a plurality of sites on the surface of a solid substrate, said oligonucleotides being the same or different wherein the process comprises:

(i) providing each site with a plurality of nucleosides, or nucleotides (preferably wherein the nucleotides are di-nucleotides or tri-nucleotides), wherein each nucleoside or nucleotide comprises a thermally cleavable 5'-OH protecting group, and wherein the nucleosides or nucleotides are immobilized on the surface of a solid substrate;

(ii) conducting thermally controlled deprotection at the 5'-OH of the nucleosides or nucleotides, at selected sites on the surface of the solid substrate to form, at each of the selected sites, nucleosides or nucleotides having deprotected 5'-OH groups;

(iii) at each of the selected sites, coupling onto the deprotected 5'-OH groups: a nucleoside 3'-phosphoramidite, or a di-nucleotide 3'-phosphoramidite, or a tri-

nucleotide 3'-phosphoramidite, wherein the nucleoside 3'-phosphoramidite, or di-nucleotide 3'-phosphoramidite, or tri-nucleotide 3'-phosphoramidite comprises a thermally cleavable 5'-OH protecting group; and oxidising the resulting phosphite triester group to a phosphate triester group;

(iv) conducting thermally controlled deprotection at the 5'-OH of the nucleosides or nucleotides, at selected sites on the surface of the substrate, wherein the selected sites can be the same as, or different from, the selected sites of the preceding step,

(v) at each of the selected sites, coupling onto the deprotected 5'-OH groups: a nucleoside 3'-phosphoramidite, or a di-nucleotide 3'-phosphoramidite, or a tri-nucleotide 3'-phosphoramidite, wherein the nucleoside 3'-phosphoramidite, or di-nucleotide 3'-phosphoramidite, or tri-nucleotide 3'-phosphoramidite comprises a thermally cleavable 5'-OH protecting group, and oxidising the resulting phosphite triester group to a phosphate triester group; and

(vi) repeating steps (iv) and (v) one or more times to obtain the desired oligonucleotides at each site on the surface of a solid substrate;

wherein the thermally cleavable 5'-OH-protecting group comprises a safety catch linker having one or two activator moieties and a cleavable linker moiety, wherein each activator moiety is protected with a protecting group, wherein the protecting group on each activator moiety is susceptible to deprotection under predetermined conditions to expose the activator moiety, thereby rendering the activator moiety and cleavable linker moiety susceptible to cleavage on heating**;** optionally

wherein the process comprises:

(i) providing each site with a plurality of nucleosides, wherein each nucleoside, comprises a thermally cleavable 5'-OH protecting group, and wherein the nucleosides are immobilized on the surface of a solid substrate;

(ii) conducting thermally controlled deprotection at the 5'-OH of the nucleosides at selected sites on the surface of the solid substrate to form, at each of the selected sites, nucleosides having deprotected 5'-OH groups;

(iii) at each of the selected sites, coupling onto the deprotected 5'-OH groups: a nucleoside 3'-phosphoramidite, or a di-nucleotide 3'-phosphoramidite, or a tri-nucleotide 3'-phosphoramidite, wherein the nucleoside 3'-phosphoramidite, or di-nucleotide 3'-phosphoramidite, or tri-nucleotide 3'-phosphoramidite comprises a thermally cleavable 5'-OH protecting group; and oxidising the resulting phosphite triester group to a phosphate triester group;

(iv) conducting thermally controlled deprotection at the 5'-OH of the nucleosides at selected sites on the surface of the substrate, wherein the selected sites can be the same as, or different from, the selected sites of the preceding step,

(v) at each of the selected sites, coupling onto the deprotected 5'-OH groups: a nucleoside 3'-phosphoramidite, or a di-nucleotide 3'-phosphoramidite, or a tri-nucleotide 3'-phosphoramidite, wherein the nucleoside 3'-phosphoramidite, or di-nucleotide 3'-phosphoramidite, or tri-nucleotide 3'-phosphoramidite comprises a thermally cleavable 5'-OH protecting group, and oxidising the resulting phosphite triester group to a phosphate triester group; and

(vi) repeating steps (iv) and (v) one or more times to obtain the desired oligonucleotides at each site on the surface of a solid substrate;

wherein the thermally cleavable 5'-OH-protecting group comprises a safety catch linker having one or two activator moieties and a cleavable linker moiety, wherein each activator moiety is protected with a protecting group, wherein the protecting group on each activator moiety is susceptible to deprotection under predetermined conditions to expose the activator moiety, thereby rendering the activator moiety and cleavable linker moiety susceptible to cleavage on heating; or optionally

wherein the process comprises:

(i) providing each site with a plurality of nucleosides comprising a thermally cleavable 5'-OH protecting group, wherein the nucleosides are immobilized on the surface of a solid substrate;

(ii) conducting thermally controlled deprotection at the 5'-OH of the nucleosides at selected sites on the surface of the solid substrate to form, at each of the selected sites, nucleosides having deprotected 5'-OH groups;

(iii) at each of the selected sites, coupling a nucleoside 3'-phosphoramidite comprising a thermally cleavable 5'-OH protecting group, onto the deprotected 5'-OH groups, and oxidising the resulting phosphite triester group to a phosphate triester group;

(iv) conducting thermally controlled deprotection at the 5'-OH of the nucleosides at selected sites on the surface of the substrate, wherein the selected sites can be the same as, or different from, the selected sites of the preceding step,

(v) at each of the selected sites, coupling a nucleoside 3'-phosphoramidite comprising a 5'-OH protecting group onto the deprotected 5'-OH groups, and oxidising the resulting phosphite triester group to a phosphate triester group; and

(vi) repeating steps (iv) and (v) one or more times to obtain the desired oligonucleotides at each site on the surface of a solid substrate;

wherein the thermally cleavable 5'-OH-protecting group comprises a safety catch linker having one or two activator moieties and a cleavable linker moiety, wherein each activator moiety is protected with a protecting group, wherein the protecting group on each activator moiety is susceptible to deprotection under predetermined conditions to expose the activator moiety, thereby rendering the activator moiety and cleavable linker moiety susceptible to cleavage on heating.

In another aspect, the present disclosure refers to a microarray comprising one or more nucleotides, oligonucleotides or nucleic acids on a plurality of sites on the surface of a solid substrate, wherein the nucleotides, oligonucleotides or double stranded nucleic acids are bound to the surface by a thermally cleavable linker; optionally wherein the nucleotides, oligonucleotides or double stranded nucleic acids are bound to the surface by a thermally cleavable linker as disclosed herein.

In another aspect, the present disclosure refers to a use of a process as disclosed herein, or a microarray as disclosed herein for preparing an oligonucleotide, a nucleic acid, preferably DNA or XNA.

In its broadest example, the present disclosure relates process for the parallel synthesis of a plurality of oligonucleotides, such as DNA and XNA, on a surface of a solid substrate, wherein deprotection of the 5'-OH protecting group is carried out under thermal control at selected sites of the solid substrate, thereby allowing coupling of a 5'-OH protected nucleoside or a 5'-OH protected nucleotide phosphoramidite building block to the deprotected 5'-OH at those sites. The process of thermally controlling the deprotection at selected sites followed by coupling of a 5'-OH protected nucleoside or a 5'-OH protected nucleotide phosphoramidite to the free 5'-OH group is repeated until the desired oligonucleotides are formed at each site of the solid substrate. The present disclosure therefore provides a massively parallel synthesis of oligonucleotides, wherein the coupling of a 5'-OH protected nucleoside or a 5'-OH protected nucleotide phosphoramidite building block to build the oligonucleotide is controlled by selectively deprotecting the growing end of nucleoside/oligonucleotide.

The present disclosure additionally relates to a process for the parallel synthesis of oligonucleotides on a plurality of sites on the surface of a solid substrate, said oligonucleotides being the same or different wherein the process comprises providing each site with a plurality of nucleosides (or nucleotides such as a di-or tri-nucleotide) comprising a 5'-OH thermally cleavable protecting group, wherein the nucleosides or nucleotides are immobilized on the surface of a solid substrate; and wherein the process involves deprotecting the 5'-OH groups at selected sites, and coupling each free 5'-OH groups at the sites with a nucleoside containing a 5'-OH-thermally cleavable protecting group or a nucleotide containing a 5'-OH thermally cleavable protecting group. Preferably, the process comprises providing each site with a plurality of nucleosides comprising a 5'-OH thermally cleavable protecting group, wherein the nucleosides are immobilized on the surface of a solid substrate; and wherein the process involves deprotecting the 5'-OH groups at selected sites, and coupling each free 5'-OH groups at the sites with a nucleoside phosphoramidite containing a 5'-OH thermally cleavable protecting group, or a nucleotide phosphoramidite containing a 5'-OH thermally cleavable protecting group (preferably a di- or tri-nucleotide 3'-phosphoramidite containing a 5'-OH-thermally cleavable protecting group). The process of selective, thermally controlled 5'-OH deprotection, and reacting with another nucleoside (e.g. a nucleoside 3'-phosphoramidite, or a nucleotide phosphoramidite such as a di- or tri-nucleotide 3'-phosphoramidite) containing a 5'-OH-thermally cleavable protecting group, is repeated in order to produce the desired oligonucleotide sequences at each site.

In any example of the present disclosure, the selective deprotection of the thermally cleavable protecting groups can be achieved by application of heat at the selected sites of the substrate, e.g. in the presence of a solvent. Preferably, the selective deprotection does not require an additional reagent.

In any example of the present disclosure, the selective cleavage of the thermally cleavable linker can be achieved by application of heat at the selected sites of the substrate, e.g in the presence of a solvent. Preferably, the selective cleavage does not require an additional reagent.

The present disclosure also relates to a process of parallel oligonucleotide synthesis that uses a substrate (e.g. a flow cell) containing a plurality of thermally addressable reaction sites, wherein individual oligonucleotide components can be grown in a thermally controlled way, wherein the thermally controlled growth involves selective, thermally controlled deprotection of the 5'-OH protected nucleoside building block, at specific reaction sites, to allow coupling of a 5'-OH protected nucleoside (or a 5'-OH protected di- or tri-nucleotide 3'-phosphoramidite containing a 5'-OH-thermally cleavable protecting group building block at the deprotected 5'-OH. The selective, thermally controlled deprotection and coupling steps

are repeated until the desired oligonucleotide sequences are produced at each site, to form an oligonucleotide microarray.

The thermally addressable reaction sites provide highly controlled, localised areas of heat which enables selective deprotection of the 5'-OH protected nucleoside (or 5'-OH protected nucleotide) building block at the selected sites, to allow coupling of the next 5'-OH protected nucleoside (or 5'-OH protected nucleotide) building block.

The thermally controlled deprotection is achieved by the provision of a thermally cleavable protecting group at the 5'-OH group of each of the nucleoside (or nucleotide) building blocks.

Advantageously, the starting nucleoside (or nucleotide) is bound to the substrate by a thermally cleavable linker group. This thermally cleavable linker group is preferably protected (i.e. a safety catch linker group) so that it is only removed at the end of the oligonucleotide synthesis. Advantageously, the thermally cleavable linker enables the oligonucleotides to be released selectively under thermal control, in order to enable selective, highly controlled hybridisation of the oligonucleotides to form double stranded nucleic acids or nucleic acid fragments.

Another example of the present disclosure encompasses a process for the parallel synthesis of one or more oligonucleotides on a plurality of sites on the surface of a solid substrate, said oligonucleotides being the same or different wherein the process comprises:

(i) providing each site with a plurality of nucleosides, or nucleotides (preferably di-nucleotides, or tri-nucleotides) comprising a 5'-OH protecting group, wherein the nucleosides, or nucleotides are immobilized on the surface of a solid substrate;

(ii) conducting thermally controlled deprotection at the 5'-OH of the nucleosides or nucleotides at selected sites on the surface of the solid substrate to form, at each of the selected sites, nucleosides (or nucleotides) having deprotected 5'-OH groups;

(iii) at each of the selected sites, coupling onto the deprotected 5'-OH groups, a nucleoside 3'-phosphoramidite (or a di-nucleotide 3'-phosphoramidite, or a tri-nucleotide 3'-phosphoramidite) comprising a 5'-OH protecting group, and oxidising the resulting phosphite triester group to a phosphate triester group;

(iv) conducting thermally controlled deprotection at the 5'-OH of the nucleosides or nucleotides at selected sites on the surface of the substrate, wherein the selected sites can be the same as, or different from, the selected sites of the preceding step,

(v) at each of the selected sites, coupling onto the deprotected 5'-OH groups, a nucleoside 3'-phosphoramidite (or a di-nucleotide 3'-phosphoramidite, or a tri-

nucleotide 3'-phosphoramidite) comprising a 5'-OH protecting group, and oxidising the resulting phosphite triester group to a phosphate triester group; and

(vi) repeating steps (iv) and (v) one or more times to obtain the desired oligonucleotides at each site on the surface of a solid substrate.

Preferably, step (i) above comprises providing each site with a plurality of nucleosides comprising a 5'-OH protecting group, wherein the nucleosides are immobilized on the surface of a solid substrate.

Yet another example of the present disclosure provides a process for the parallel synthesis of one or more oligonucleotides on a plurality of sites on the surface of a chip, said oligonucleotides being the same or different wherein the process comprises:

(i) providing each site with a plurality of nucleosides, or nucleotides (preferably wherein the nucleotides are di-nucleotides, or tri-nucleotides) comprising a 5'-OH thermally cleavable protecting group, wherein the nucleosides are attached to the surface of a solid substrate at the 3'-position via a thermally cleavable linker group:

(ii) thermally controlled deprotection at the 5'-OH of the nucleosides at selected sites on the surface of the chip to form, at each of the selected sites, nucleosides or nucleotides) having deprotected 5'-OH groups;

(iii) at each of the selected sites, coupling onto the deprotected 5'-OH groups, a nucleoside 3'-phosphoramidite (or a di-nucleotide 3'-phosphoramidite, or a tri-nucleotide 3'-phosphoramidite) comprising a thermally cleavable 5'-OH protecting group, and oxidising the resulting phosphite triester group to a phosphate triester group;

(iv) thermally controlled deprotection at the 5'-OH of the nucleosides or nucleotides at selected sites on the surface of the substrate, wherein the selected sites can be the same as, or different from, the selected sites of the preceding step,

(v) at each of the selected sites, coupling onto the deprotected 5'-OH groups, a nucleoside 3'-phosphoramidite (or a di-nucleotide 3'-phosphoramidite, or a tri-nucleotide 3'-phosphoramidite) comprising a thermally cleavable 5'-OH protecting group, and oxidising the resulting phosphite triester group to a phosphate triester group;

(vi) repeating steps (iv) and (v) one or more times to obtain the desired oligonucleotides at each site on the surface of the chip, wherein the chip comprises individually thermally addressable sites.

Preferably, step (i) above comprises providing each site with a plurality of nucleosides comprising a 5'-OH protecting group, wherein the nucleosides are immobilized on the surface of a solid substrate.

The processes of the present disclosure enables massively parallel synthesis of a plurality of different oligonucleotides on the surface of the substrate, by utilising thermally controlled deprotection of selected nucleosides or nucleotides, thereby enabling selective reaction of those nucleosides or nucleotides with an incoming nucleoside or nucleotide building block. Since each site is independently thermally addressable, only the nucleosides or nucleotides at the sites which are heated are deprotected, and hence available for reaction in the coupling step. Moreover, since the first nucleoside or nucleotide is bound to the surface of the substrate, the reagents can be washed over the solid substrate, such that the coupling reaction only occurs on the sites that were heated and thus have a deprotected 5'-OH group leaving the other sites unaffected. The process allows for the high fidelity, parallel synthesis of the desired oligonucleotides at each site.

The disclosure further provides a microarray comprising one or more nucleotides, oligonucleotides or nucleic acids on a plurality of sites on the surface of a solid substrate, wherein the nucleotides, oligonucleotides or double stranded nucleic acids are bound to the surface by a thermally cleavable linker.

In a further example the disclosure provides a microarray which is preparable or obtainable by any of the processes described herein.

Yet another example of the disclosure provides the use of a process as described in any example or example herein, or the use of a microarray as described in any example or example disclosed herein for preparing an oligonucleotide, a nucleic acid, preferably DNA or XNA.

The disclosure additionally provides an oligonucleotide or nucleic acid, which is preparable or obtainable by any of the processes described herein.

The process can additionally further comprise thermally controlled release of the resulting oligonucleotides at selected sites, wherein the selectively released oligonucleotides hybridise with selected immobilized oligonucleotides under thermal control to form nucleic acids.

The process can be further combined with error-detection operations in the hybridisation steps in order to further increase the purity of the final nucleic acid.

CLAIMS

1. A process for the parallel synthesis of one or more oligonucleotides on a plurality of sites on the surface of a solid substrate, said oligonucleotides being the same or different wherein the process comprises:
   (i) providing each site with a plurality of nucleosides, or nucleotides (preferably wherein the nucleotides are di-nucleotides or tri-nucleotides), wherein each nucleoside or nucleotide comprises a thermally cleavable 5'-OH protecting group, and wherein the nucleosides or nucleotides are immobilized on the surface of a solid substrate;
   (ii) conducting thermally controlled deprotection at the 5'-OH of the nucleosides or nucleotides, at selected sites on the surface of the solid substrate to form, at each of the selected sites, nucleosides or nucleotides having deprotected 5'-OH groups;
   (iii) at each of the selected sites, coupling onto the deprotected 5'-OH groups: a nucleoside 3'-phosphoramidite, or a di-nucleotide 3'-phosphoramidite, or a tri-nucleotide 3'-phosphoramidite, wherein the nucleoside 3'-phosphoramidite, or di-nucleotide 3'-phosphoramidite, or tri-nucleotide 3'-phosphoramidite comprises a thermally cleavable 5'-OH protecting group; and oxidising the resulting phosphite triester group to a phosphate triester group;
   (iv) conducting thermally controlled deprotection at the 5'-OH of the nucleosides or nucleotides, at selected sites on the surface of the substrate, wherein the selected sites can be the same as, or different from, the selected sites of the preceding step,
   (v) at each of the selected sites, coupling onto the deprotected 5'-OH groups: a nucleoside 3'-phosphoramidite, or a di-nucleotide 3'-phosphoramidite, or a tri-nucleotide 3'-phosphoramidite, wherein the nucleoside 3'-phosphoramidite, or di-nucleotide 3'-phosphoramidite, or tri-nucleotide 3'-phosphoramidite comprises a thermally cleavable 5'-OH protecting group, and oxidising the resulting phosphite triester group to a phosphate triester group; and
   (vi) repeating steps (iv) and (v) one or more times to obtain the desired oligonucleotides at each site on the surface of a solid substrate;
   wherein the thermally cleavable 5'-OH-protecting group comprises a safety catch linker having one or two activator moieties and a cleavable linker moiety, wherein each activator moiety is protected with a protecting group, wherein the protecting group on each activator moiety is susceptible to deprotection under predetermined conditions to

expose the activator moiety, thereby rendering the activator moiety and cleavable linker moiety susceptible to cleavage on heating**;** optionally

wherein the process comprises:

(i) providing each site with a plurality of nucleosides, wherein each nucleoside, comprises a thermally cleavable 5'-OH protecting group, and wherein the nucleosides are immobilized on the surface of a solid substrate;

(ii) conducting thermally controlled deprotection at the 5'-OH of the nucleosides at selected sites on the surface of the solid substrate to form, at each of the selected sites, nucleosides having deprotected 5'-OH groups;

(iii) at each of the selected sites, coupling onto the deprotected 5'-OH groups: a nucleoside 3'-phosphoramidite, or a di-nucleotide 3'-phosphoramidite, or a tri-nucleotide 3'-phosphoramidite, wherein the nucleoside 3'-phosphoramidite, or di-nucleotide 3'-phosphoramidite, or tri-nucleotide 3'-phosphoramidite comprises a thermally cleavable 5'-OH protecting group; and oxidising the resulting phosphite triester group to a phosphate triester group;

(iv) conducting thermally controlled deprotection at the 5'-OH of the nucleosides at selected sites on the surface of the substrate, wherein the selected sites can be the same as, or different from, the selected sites of the preceding step,

(v) at each of the selected sites, coupling onto the deprotected 5'-OH groups: a nucleoside 3'-phosphoramidite, or a di-nucleotide 3'-phosphoramidite, or a tri-nucleotide 3'-phosphoramidite, wherein the nucleoside 3'-phosphoramidite, or di-nucleotide 3'-phosphoramidite, or tri-nucleotide 3'-phosphoramidite comprises a thermally cleavable 5'-OH protecting group, and oxidising the resulting phosphite triester group to a phosphate triester group; and

(vi) repeating steps (iv) and (v) one or more times to obtain the desired oligonucleotides at each site on the surface of a solid substrate;

wherein the thermally cleavable 5'-OH-protecting group comprises a safety catch linker having one or two activator moieties and a cleavable linker moiety, wherein each activator moiety is protected with a protecting group, wherein the protecting group on each activator moiety is susceptible to deprotection under predetermined conditions to expose the activator moiety, thereby rendering the activator moiety and cleavable linker moiety susceptible to cleavage on heating; or optionally

wherein the process comprises:

(i) providing each site with a plurality of nucleosides comprising a thermally cleavable 5'-OH protecting group, wherein the nucleosides are immobilized on the surface of a solid substrate;

(ii) conducting thermally controlled deprotection at the 5'-OH of the nucleosides at selected sites on the surface of the solid substrate to form, at each of the selected sites, nucleosides having deprotected 5'-OH groups;

(iii) at each of the selected sites, coupling a nucleoside 3'-phosphoramidite comprising a thermally cleavable 5'-OH protecting group, onto the deprotected 5'-OH groups, and oxidising the resulting phosphite triester group to a phosphate triester group;

(iv) conducting thermally controlled deprotection at the 5'-OH of the nucleosides at selected sites on the surface of the substrate, wherein the selected sites can be the same as, or different from, the selected sites of the preceding step,

(v) at each of the selected sites, coupling a nucleoside 3'-phosphoramidite comprising a 5'-OH protecting group onto the deprotected 5'-OH groups, and oxidising the resulting phosphite triester group to a phosphate triester group; and

(vi) repeating steps (iv) and (v) one or more times to obtain the desired oligonucleotides at each site on the surface of a solid substrate;

wherein the thermally cleavable 5'-OH-protecting group comprises a safety catch linker having one or two activator moieties and a cleavable linker moiety, wherein each activator moiety is protected with a protecting group, wherein the protecting group on each activator moiety is susceptible to deprotection under predetermined conditions to expose the activator moiety, thereby rendering the activator moiety and cleavable linker moiety susceptible to cleavage on heating.

2. A process according to claim 1, wherein the nucleosides or nucleotides in step (i) are attached to the surface of a solid substrate at the 3'-position via a thermally cleavable linker group, optionally wherein:

the thermally cleavable linker group comprises one or two activator moieties, and a cleavable linker moiety that on heating, causes the linker group to cleave, thereby causing detachment from the surface of the solid substrate; or

the thermally cleavable linker group comprises a safety catch linker, having one or two activator moieties and a cleavable linker moiety, wherein the activator moiety is protected with a protecting group, wherein the protecting group on each activator moiety is susceptible to deprotection under predetermined conditions, to expose the activator moiety, thereby rendering the activator moiety and cleavable linker

moiety susceptible to cleavage on heating.

3. A process according to any preceding claim, wherein the thermally controlled deprotection in steps (ii) and (iv) is achieved by local heating at the selected sites; optionally wherein there is substantially no deprotection of the 5'-OH protecting groups at sites other than the selected sites.

4. A process according to any preceding claim wherein the coupling steps (iii) and (v) comprise contacting a solution containing the nucleoside 3'-phosphoramidite, or di-nucleotide 3'-phosphoramidite, or tri-nucleotide 3'-phosphoramidite comprising a 5'-OH protecting group with the surface of the substrate, wherein the nucleoside 3'-phosphoramidite, or di-nucleotide 3'-phosphoramidite, or tri-nucleotide 3'-phosphoramidite reacts with the deprotected 5'-OH groups at the selected sites; optionally wherein there is substantially no reaction at the sites other than the selected sites.

5. A process according to any preceding claim, wherein step (i) comprises providing at each site: a plurality of nucleosides or nucleotides immobilized to the solid surface, represented by:

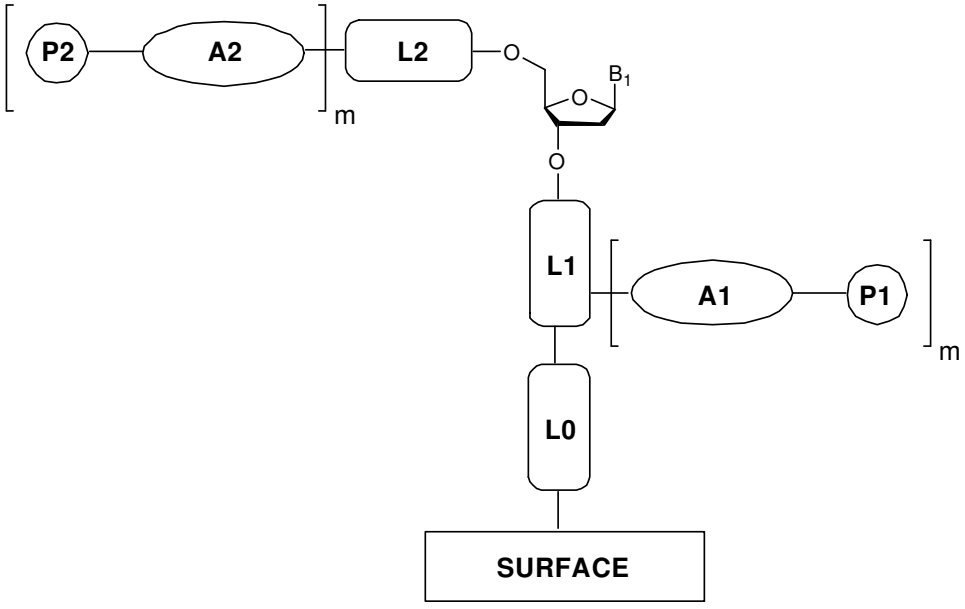

, or

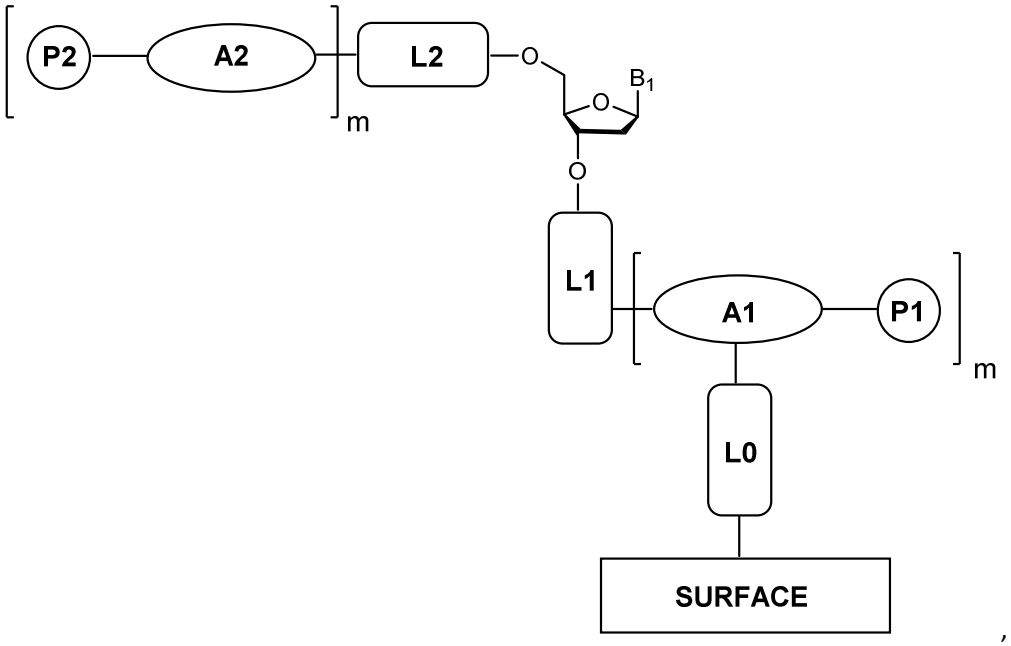

,

wherein:

- L1-A1-P1 together represents a safety catch linker for attachment at the 3'-OH group of the nucleoside to the surface, wherein:
    - P1 represents a protecting group,
    - L1 represents a thermally cleavable linker moiety,
    - A1 represents an activator moiety that, upon removal of P1, is capable of causing cleavage of the cleavable linker from the solid surface;
- P2-A2-L2 together represents a safety catch 5'-OH-protecting group, wherein:
    - P2 represents a protecting group,
    - L2 represents a cleavable linker moiety,
    - A2 represents an activator moiety that, upon removal of P2, is capable of causing removal of the 5'-OH protecting group;
- m at each occurrence is the same or different, and represents 1 or 2;
- L0 represents a moiety for attachment of the first nucleoside via the cleavable linker group to the surface; and
- B_1 represents an optionally protected canonical or an optionally protected non-canonical nucleobase,

wherein A1, A2, L1 and L2 can be the same or different, and wherein P1 and P2 are different and are removable under different conditions or reagents;

or

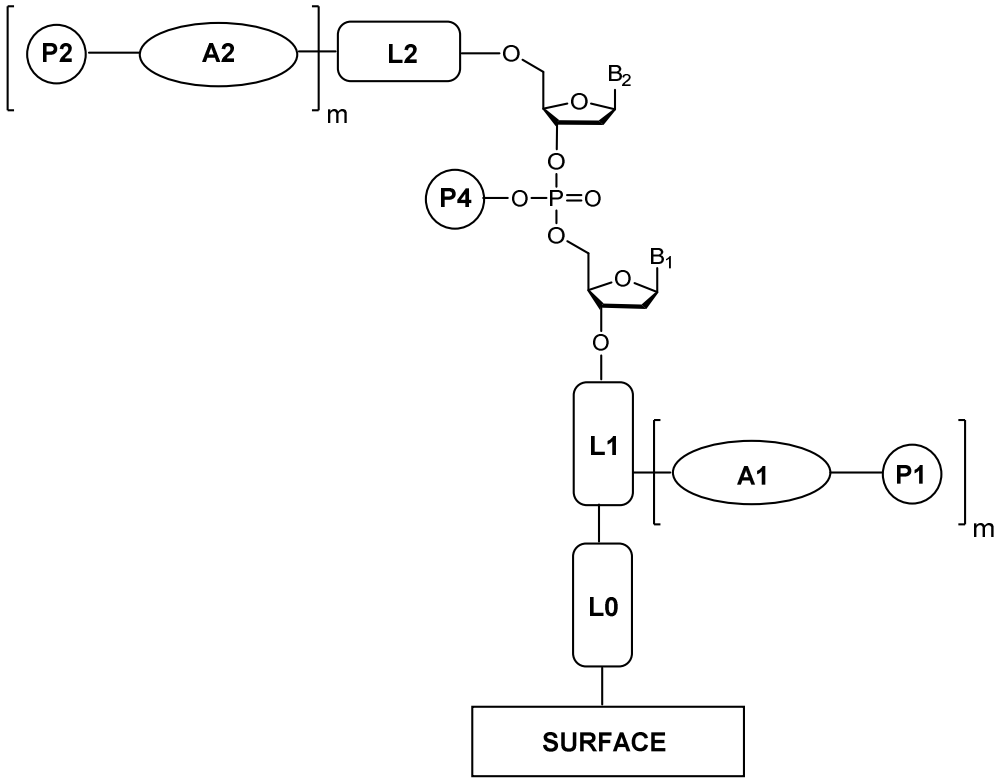
P2
A2
L2
m
O
B2
O
O
P4
O
P=O
O
O
B1
O
O
L1
A1
P1
m
L0
SURFACE

; or

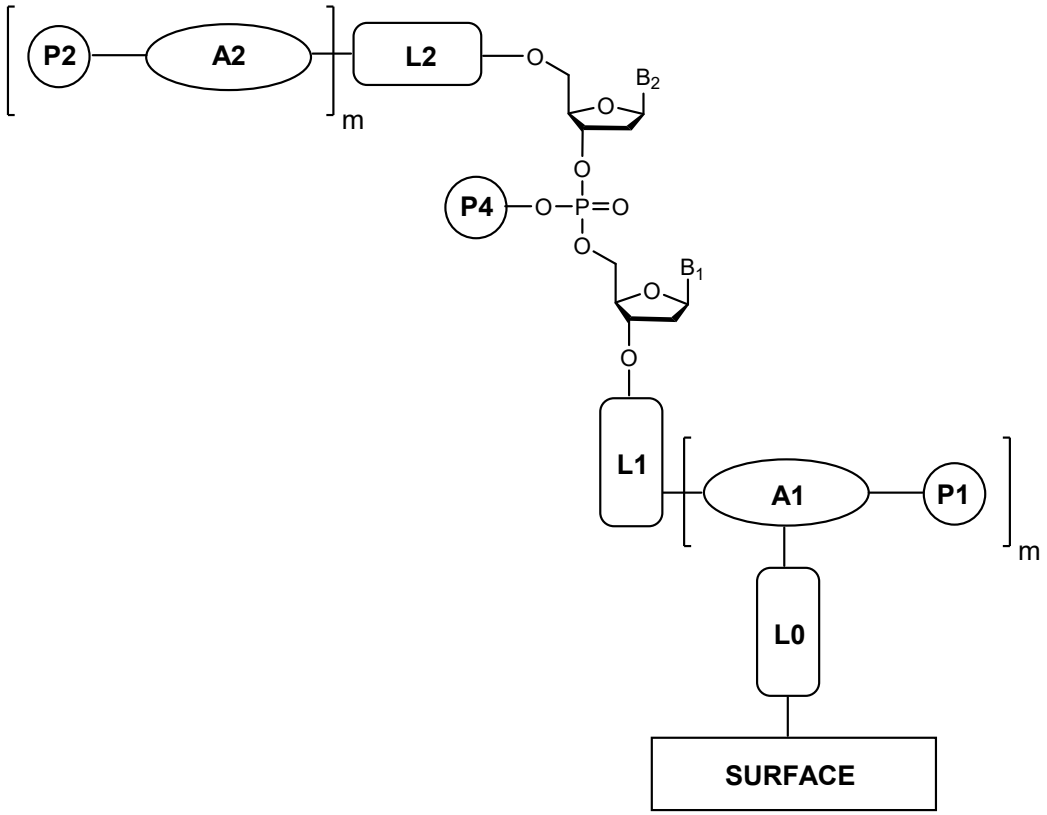
P2
A2
L2
m
O
B2
O
O
P4
O
P=O
O
O
B1
O
O
L1
A1
P1
m
L0
SURFACE

wherein:

- L1-A1-P1 together represents a safety catch linker for attachment at the 3'-OH group of the nucleotide to the surface, wherein:
    - P1 represents a protecting group,
    - L1 represents a thermally cleavable linker moiety,
    - A1 represents an activator moiety that, upon removal of P1, is capable of causing cleavage of the cleavable linker from the solid surface;
- P2-A2-L2 together represents a safety catch 5'-OH-protecting group, wherein:
    - P2 represents a protecting group,
    - L2 represents a cleavable linker moiety,
    - A2 represents an activator moiety that, upon removal of P2, is capable of causing removal of the 5'-OH protecting group;
- P4 represents a phosphate protecting group,
- m at each occurrence is the same or different, and represents 1 or 2;
- L0 represents a moiety for attachment of the first nucleoside via the cleavable linker group to the surface; and
- B_1 and B_2 may be the same or different and each independently represents an optionally protected canonical or an optionally protected non-canonical nucleobase,

wherein A1, A2, L1 and L2 can be the same or different, and wherein P1 and P2 are different and are removable under different conditions or reagents;

or

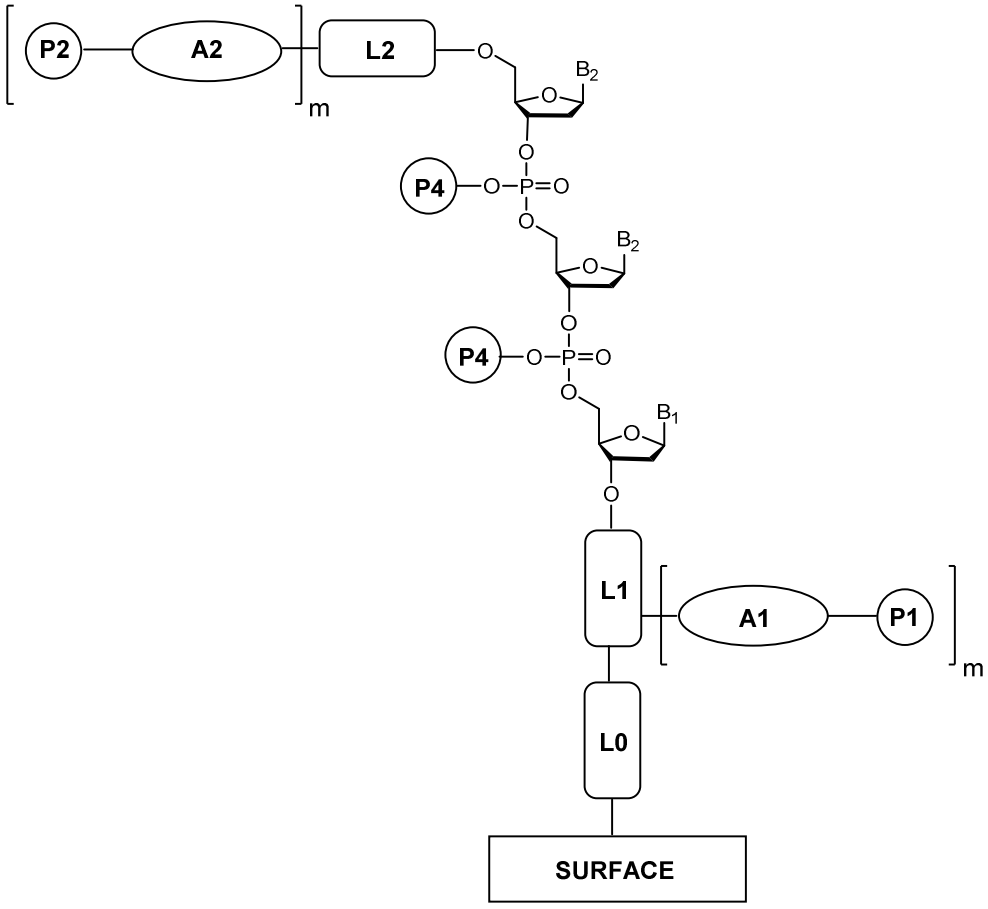

; or

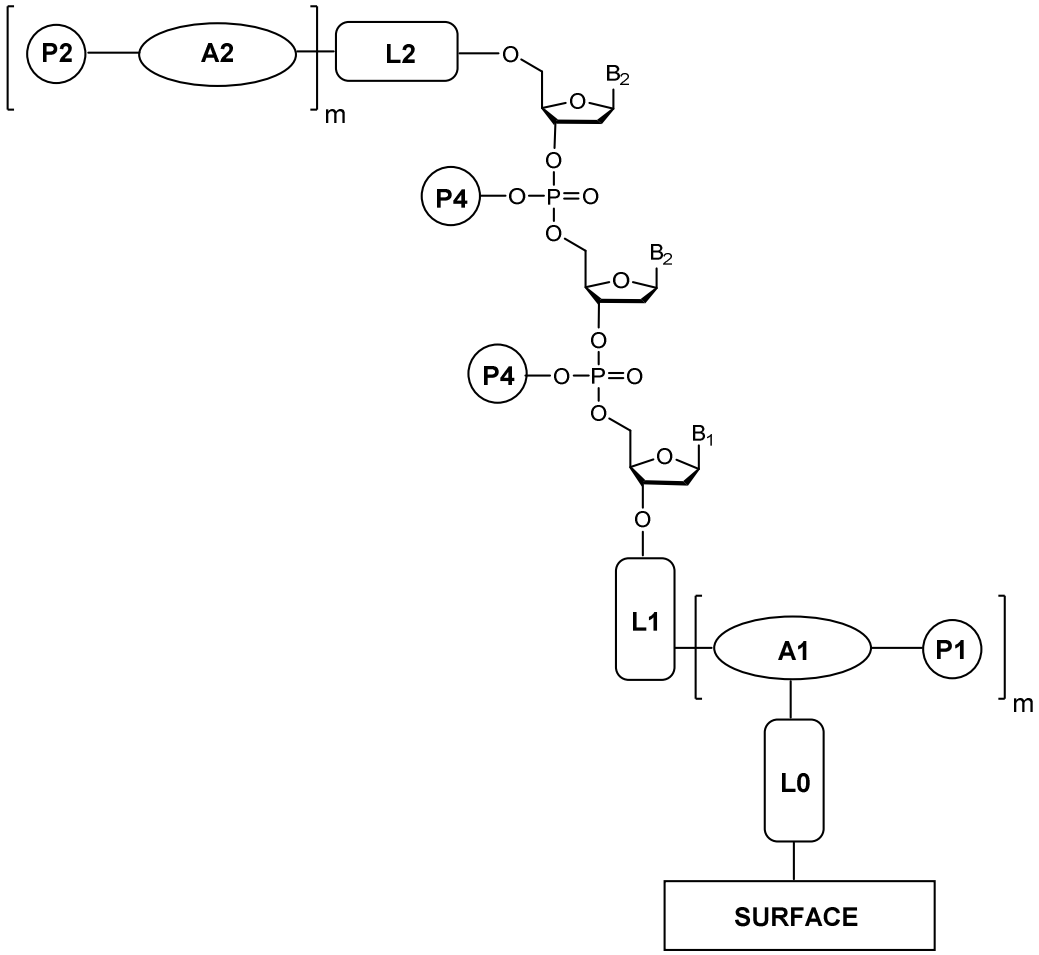

wherein:

- L1-A1-P1 together represents a safety catch linker for attachment at the 3'-OH group of the nucleotide to the surface, wherein:
  - P1 represents a protecting group,
  - L1 represents a thermally cleavable linker moiety,
  - A1 represents an activator moiety that, upon removal of P1, is capable of causing cleavage of the cleavable linker from the solid surface;
- P2-A2-L2 together represents a safety catch 5'-OH-protecting group, wherein:
  - P2 represents a protecting group,
  - L2 represents a cleavable linker moiety,
  - A2 represents an activator moiety that, upon removal of P2, is capable of causing removal of the 5'-OH protecting group;
- each P4 may be the same or different and each independently represents a phosphate protecting group,
- m at each occurrence is the same or different, and represents 1 or 2;
- L0 represents a moiety for attachment of the first nucleoside via the cleavable linker group to the surface; and

- B_1, B_2 and B_3 may be the same or different and each independently represents an optionally protected canonical or an optionally protected non-canonical nucleobase,

wherein A1, A2, L1 and L2 can be the same or different, and wherein P1 and P2 are different and are removable under different conditions or reagents;

optionally wherein step (i) comprises providing at each site, a plurality of nucleosides immobilized to the solid surface, represented by:

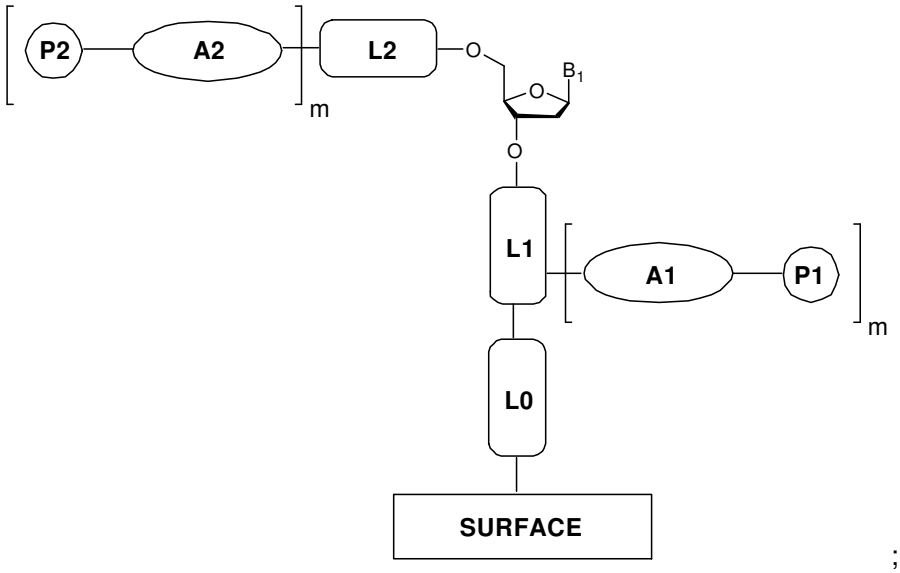

; or

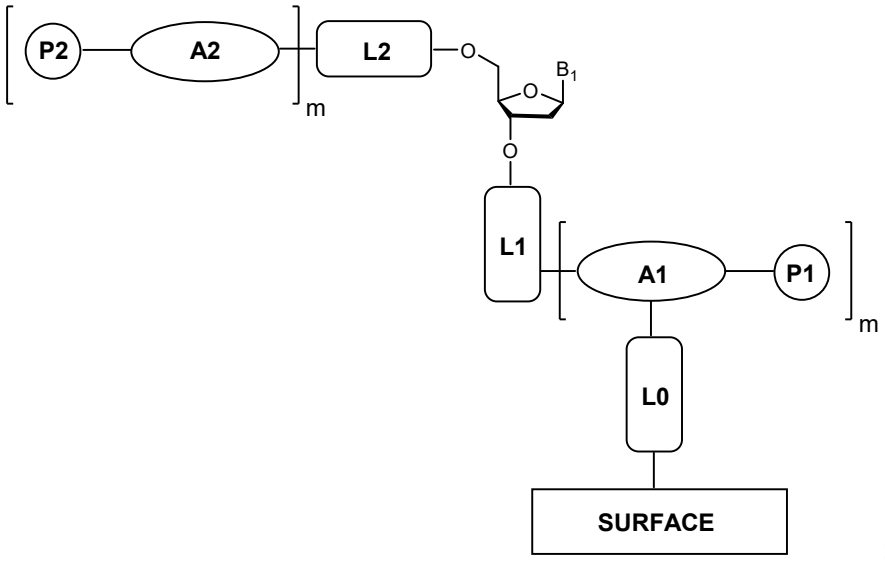

; and

preferably:

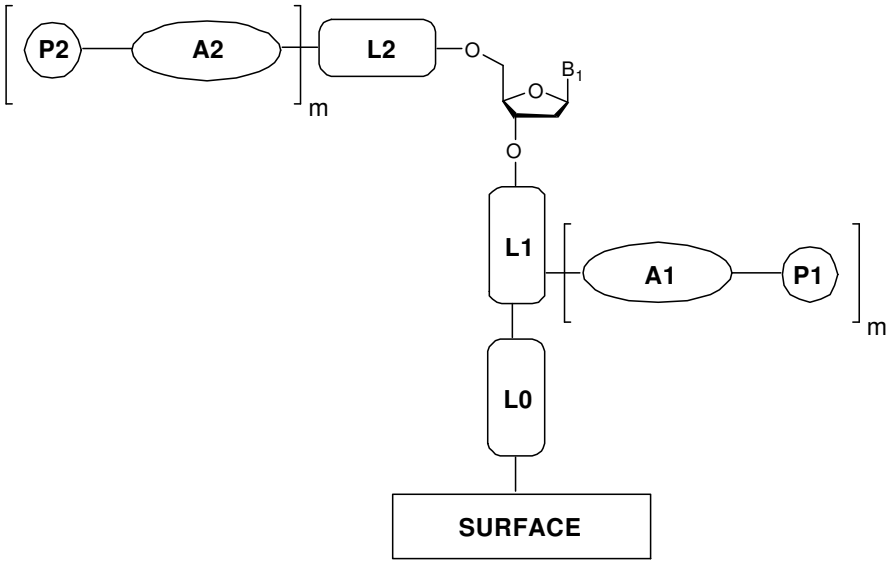

wherein:

- L1-A1-P1 together represents a safety catch linker for attachment at the 3'-OH group of the nucleoside to the surface, wherein:
  - P1 represents a protecting group,
  - L1 represents a thermally cleavable linker moiety,
  - A1 represents an activator moiety that, upon removal of P1, is capable of causing cleavage of the cleavable linker from the solid surface;
- P2-A2-L2 together represents a safety catch 5'-OH-protecting group, wherein:
  - P2 represents a protecting group,
  - L2 represents a cleavable linker moiety,
  - A2 represents an activator moiety that, upon removal of P2, is capable of causing removal of the 5'-OH protecting group;
- m at each occurrence is the same or different, and represents 1 or 2;
- L0 represents a moiety for attachment of the first nucleoside via the cleavable linker group to the surface; and
- B_1 represents an optionally protected canonical or an optionally protected non-canonical nucleobase.

6. A process according to Claim 5, wherein step (ii) comprises thermally controlled removal of the safety catch 5'-OH protecting cleavable linker group P2-A2-L2.

7. A process according to any preceding claim wherein the nucleoside or nucleotide comprising a 5'-OH-protecting group in step (iii) and step (v) is:

- a nucleoside 3'-phosphoramidite comprising a thermally cleavable 5'-OH protecting group represented by:

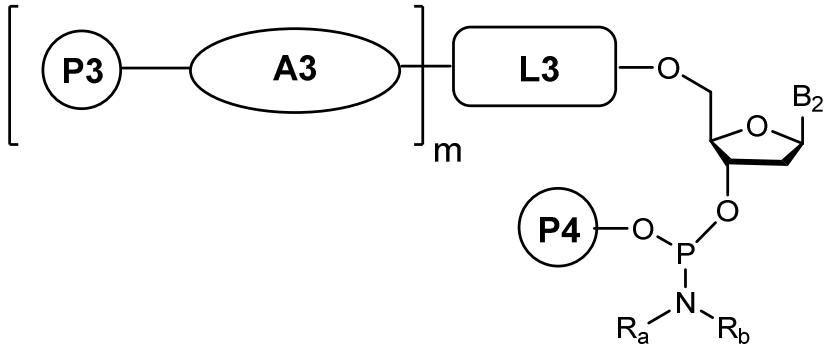

wherein:

- P3-A3-L3 together represents a safety catch 5'-OH-protecting group, wherein:
- P3 represents a protecting group
- L3 represents a cleavable linker moiety,
- A3 represents an activator moiety that, upon removal of P3, is capable of causing removal of the 5'-OH protecting group;
  - m = 1 or 2;
  - P4 represents a phosphoramidite protecting group;
  - B_2 represents an optionally protected canonical or an optionally protected non-canonical nucleobase; and
  - R_a and R_b can be the same or different and each represents alkyl; or

- a di-nucleotide 3'-phosphoramidite comprising a thermally cleavable 5'-OH protecting group represented by:

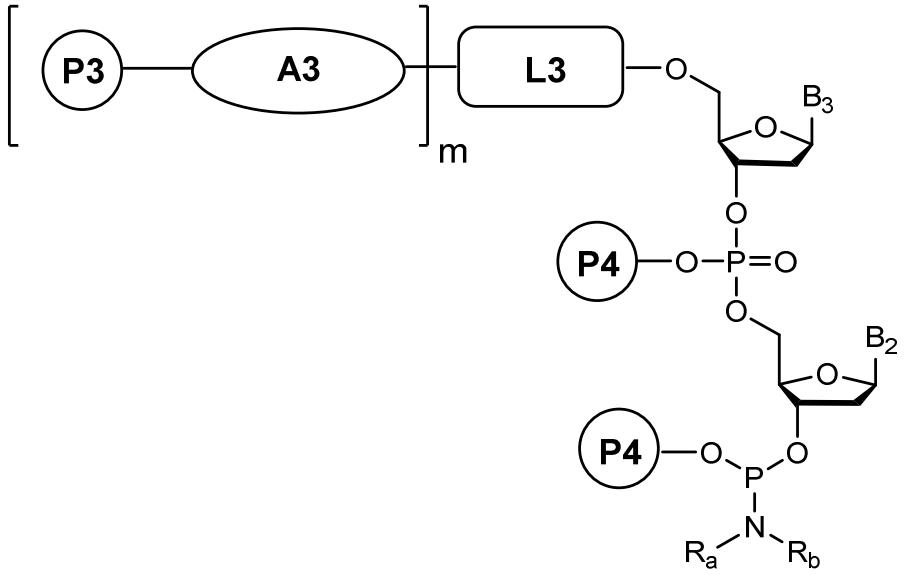

wherein:

- P3-A3-L3 together represents a safety catch 5'-OH-protecting group, wherein:
- P3 represents a protecting group
- L3 represents a cleavable linker moiety,
- A3 represents an activator moiety that, upon removal of P3, is capable of causing removal of the 5'-OH protecting group;
  - m = 1 or 2;
  - each P4 may be the same or different and represents a phosphoramidite or phosphate protecting group;
  - B_2 and B_3 may be the same or different and each independently represents an optionally protected canonical or an optionally protected non-canonical nucleobase; and
  - R_a and R_b may be the same or different and each represents alkyl; or

- a tri-nucleotide 3'-phosphoramidite comprising a thermally cleavable 5'-OH protecting group represented by:

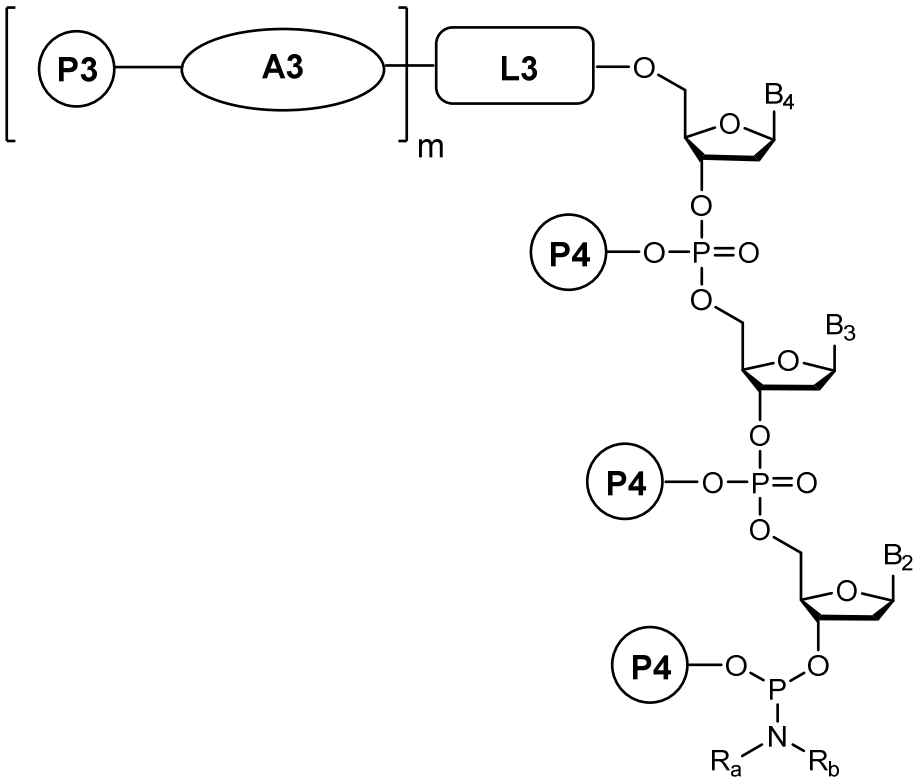

wherein:

- P3-A3-L3 together represents a safety catch 5'-OH-protecting group, wherein:
  - P3 represents a protecting group
  - L3 represents a cleavable linker moiety,
  - A3 represents an activator moiety that, upon removal of P3, is capable of causing removal of the 5'-OH protecting group;
- m = 1 or 2;
- each P4 may be the same or different and each represents a phosphoramidite or phosphate protecting group;
- B_2, B_3 and B_4 may be the same or different and each independently represents an optionally protected canonical or an optionally protected non-canonical nucleobase; and
- R_a and R_b may be the same or different and each represents alkyl.

8. A process according to any preceding claim wherein the coupling of: the nucleoside 3'-phosphoramidite comprising a 5'-OH protecting group, or the di-nucleotide 3'-phosphoramidite comprising a 5'-OH protecting group, or the tri-nucleotide 3'-phosphoramidite comprising a 5'-OH protecting group, in step (iii) to a deprotected 5'-

OH group of the immobilized nucleoside or nucleotide, followed by oxidation, forms a structure represented by:

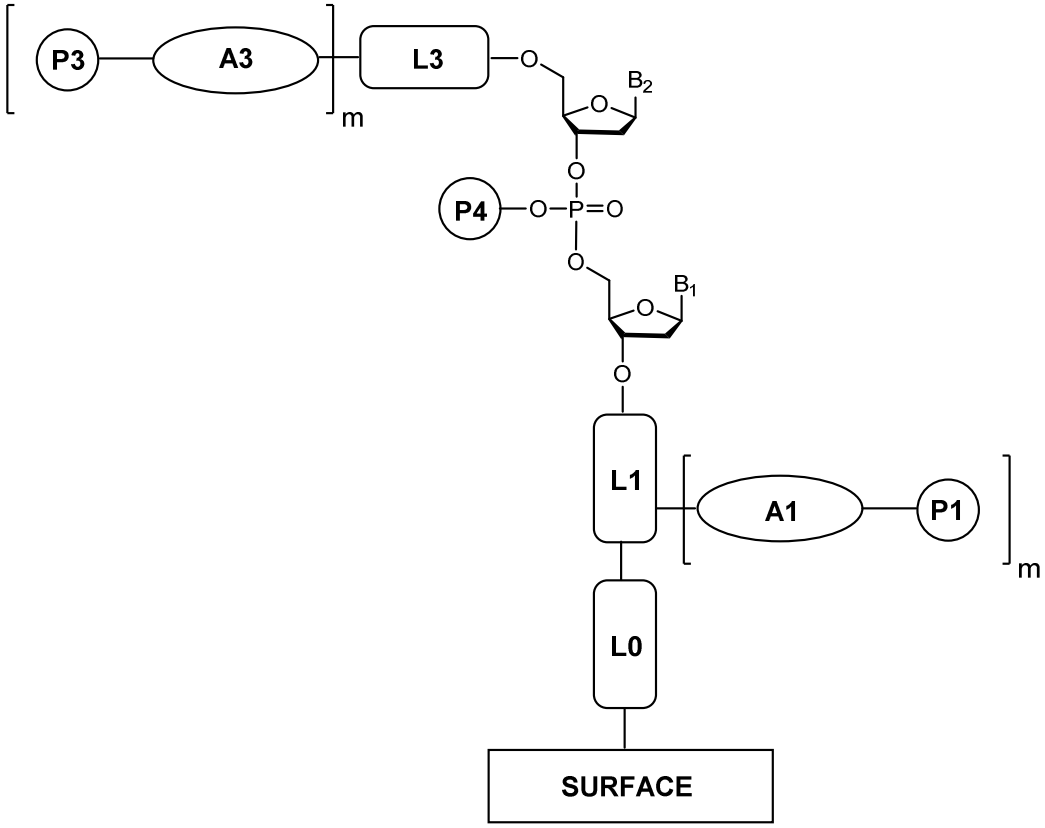

; or

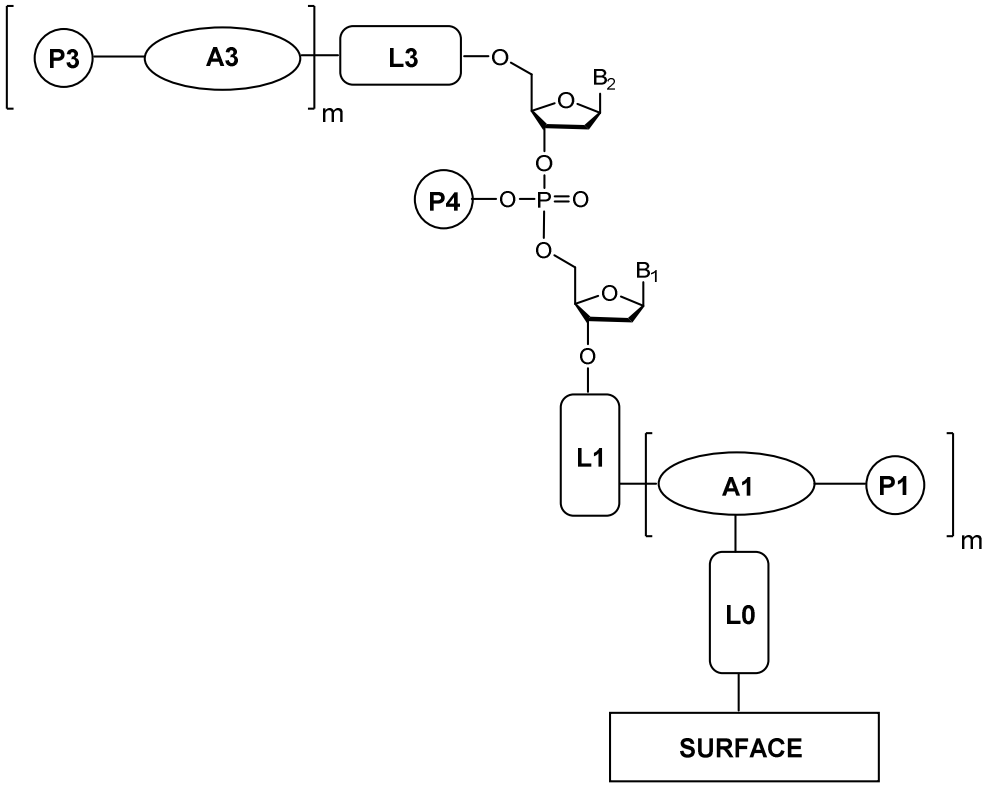

; or

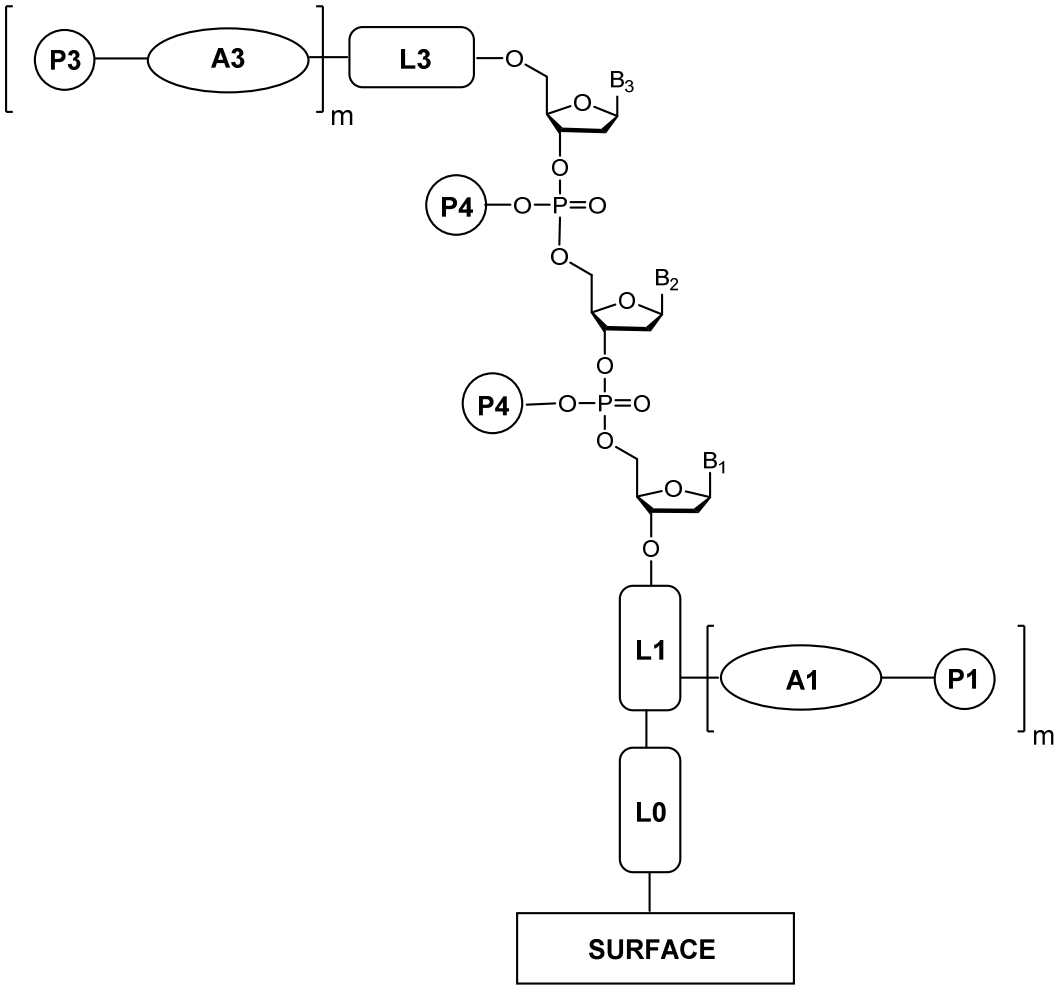

; or

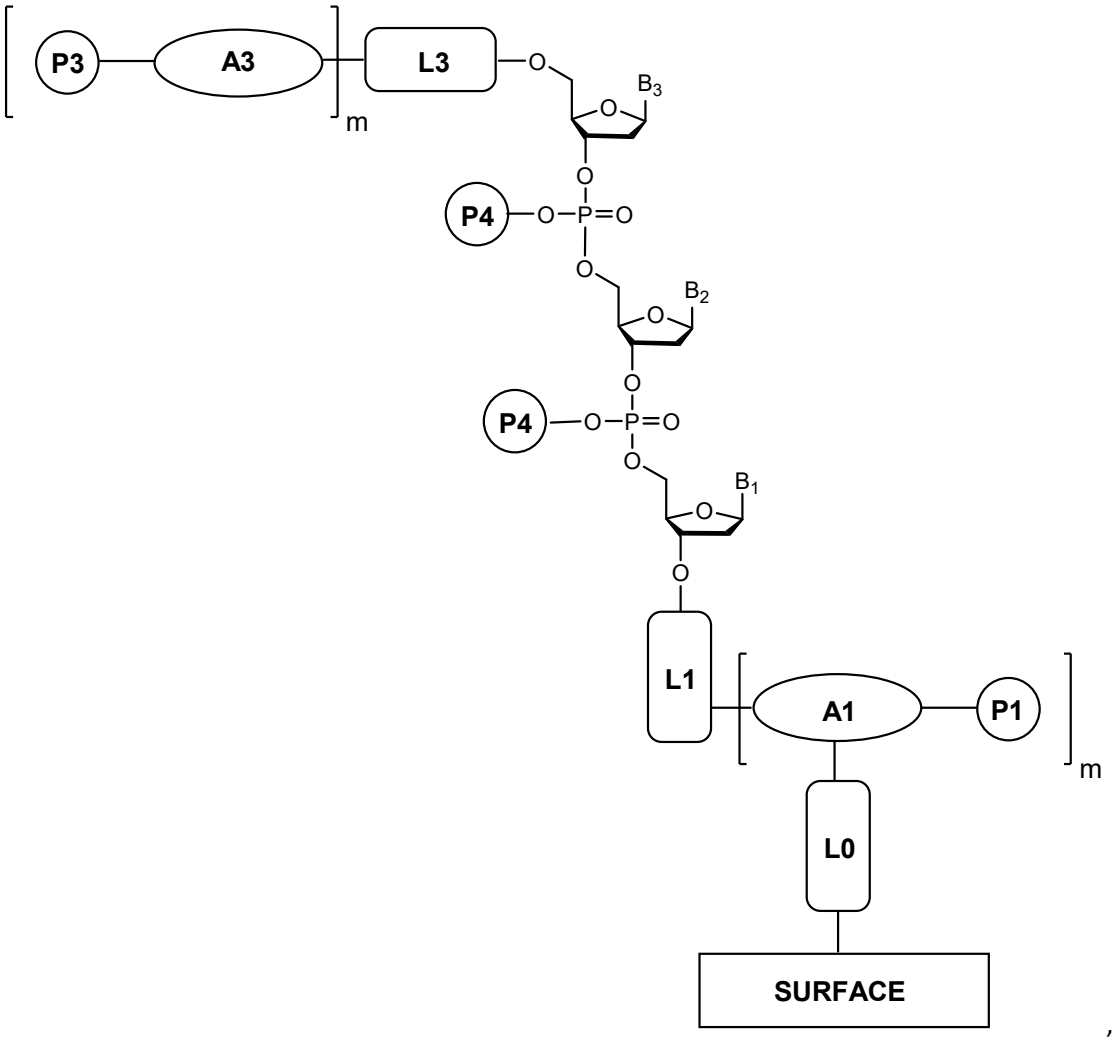

,

wherein:

- L1-A1-P1 together represents a safety catch linker for attachment at the 3'-OH group of the nucleoside to the surface, wherein:
  - P1 represents a protecting group,
  - L1 represents a thermally cleavable linker moiety,
  - A1 represents an activator moiety that, upon removal of P1, is capable of causing cleavage of the cleavable linker from the solid surface;
- P3-A3-L3 together represents a safety catch 5'-OH protecting group, wherein:
  - P3 represents a protecting group,
  - L3 represents a cleavable linker moiety,
  - A3 represents an activator moiety that, upon removal of P3, is capable of causing removal of the 5'-OH protecting group;
- m at each occurrence is the same or different, and represents 1 or 2;

- L0 represents a moiety for attachment of the first nucleoside via the cleavable linker group to the surface;
- each B_1, or B_2 or B_3 independently represents an optionally protected canonical or an optionally protected non-canonical nucleobase,

wherein A1, A3, L1 and L3 can be the same or different, and wherein P1 and P3 are different and are removable under different conditions or reagents; and

- each P4 may be the same or different and each represents a phosphate protecting group.

9. A process according to any preceding claim wherein steps (ii) and (iii) are repeated, to sequentially grow the oligonucleotides at each site by successive thermally controlled deprotection at the 5'-OH of the nucleosides or nucleotides and coupling of an incoming nucleoside or nucleotide represented by:

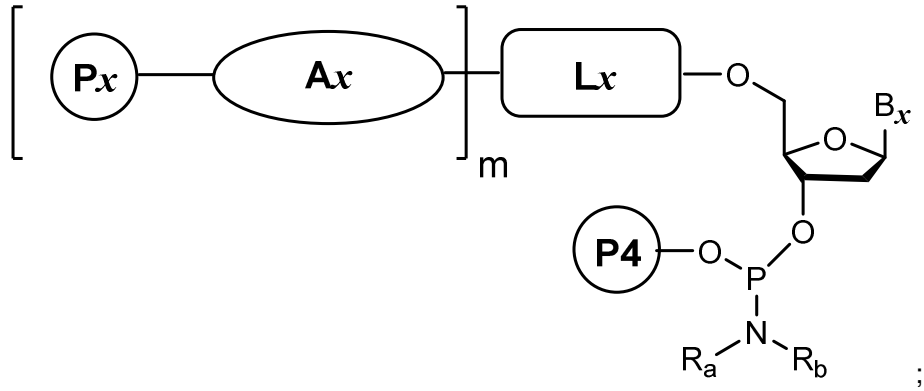

; or

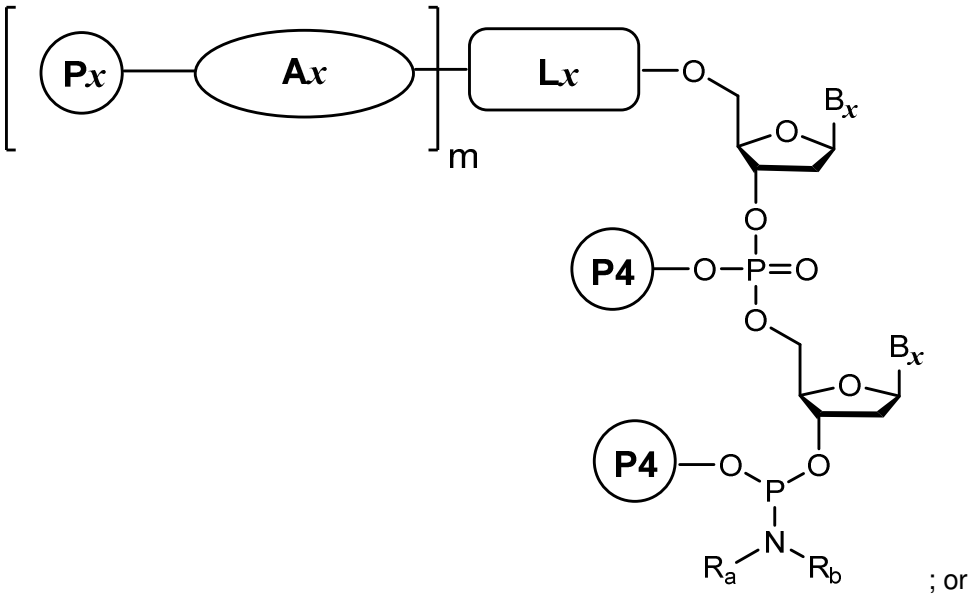

; or

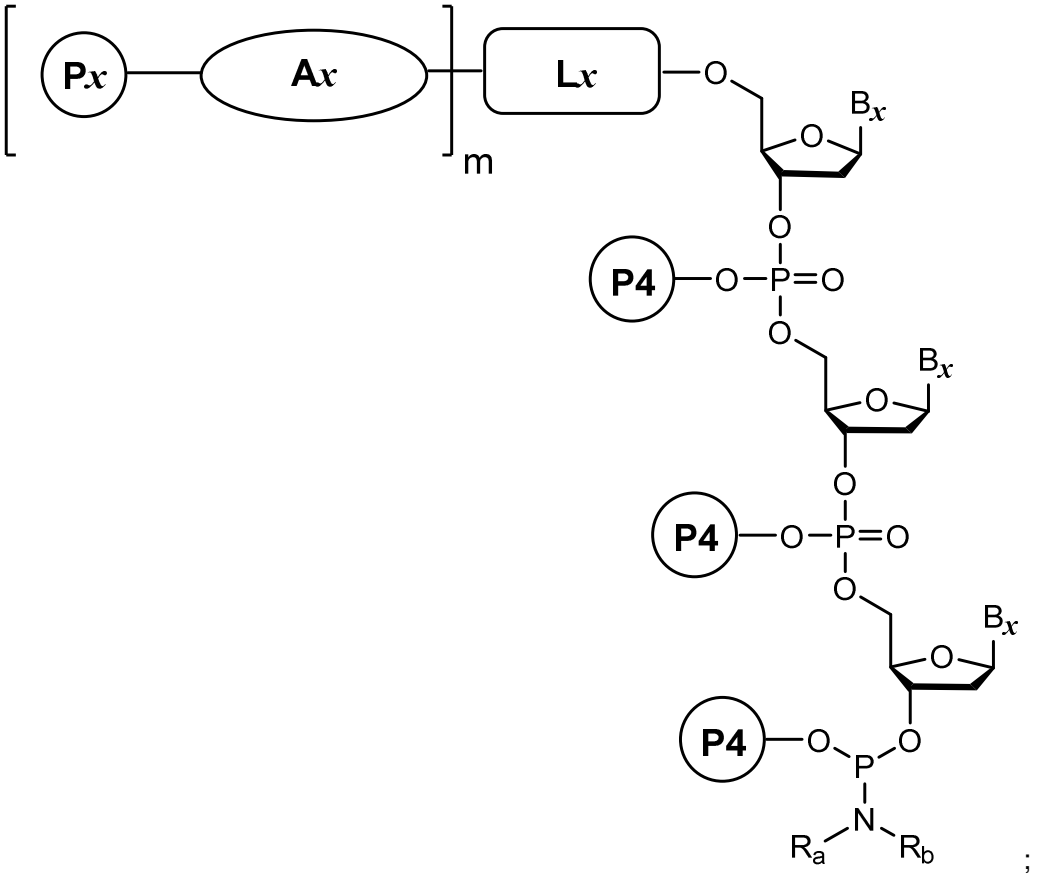

;

wherein:

- P*x*-A*x*-L*x* together represents a cleavable 5'-OH protecting group which protects the 5'-OH group of the incoming nucleoside or nucleotide, wherein:
  - L*x* represents a cleavable linker moiety,
  - P*x* represents a protecting group, and
  - A*x* represents an activator moiety that, upon removal of P*x*, is capable of causing removal of the 5'-OH protecting group;
- m = 1 or 2;
- each P4 can be the same or different and each represents a phosphoramidite or phosphate protecting group;
- each B_x may be the same or different and each independently represents an optionally protected canonical or an optionally protected non-canonical nucleobase; and
- R_a and R_b can be the same or different and each represents alkyl.

10. A process according to any preceding claim, wherein the 5'-OH-protected nucleosides of step (i) comprise a thermally cleavable 5'-OH-protecting group, and are attached to

the surface of a solid substrate at the 3'-position via a thermally cleavable linker group, wherein the thermally cleavable linker attaching the first nucleoside to the surface is stable to removal during the oligonucleotide synthesis steps.

11. A process according to any of Claims 5-10, wherein the protecting groups on the nucleobases, when present, are stable to removal during the oligonucleotide synthesis; and/or wherein the protecting groups P4 on the nucleoside 3'-phosphoramidites, or the di-nucleotide 3'-phosphoramidites, or the tri-nucleotide 3'-phosphoramidites, are stable to removal during the oligonucleotide synthesis.

12. A process according to any preceding claim wherein step (i) comprises:

(a) providing a solid surface comprising a plurality of sites, wherein each site is functionalized with thermally labile linker groups, each of which is represented by:

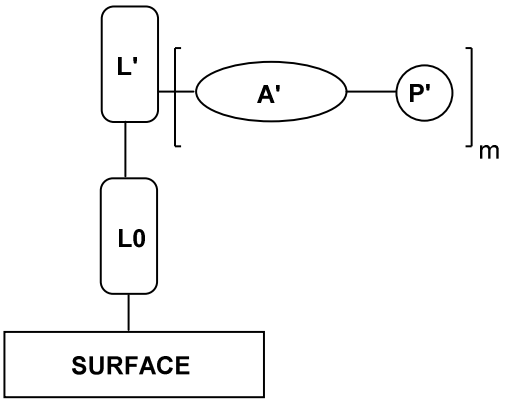

or

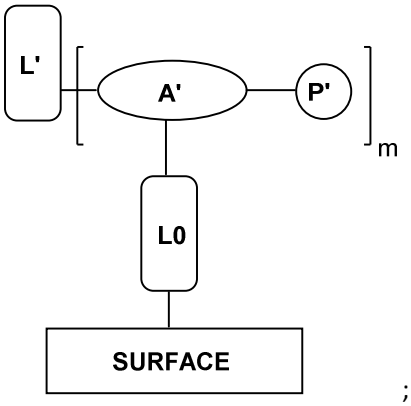

;

wherein:

- L'-A'-P' together represents a safety catch linker attached to the surface via L0, wherein:
  - P' represents a protecting group,
  - L' represents a cleavable linker moiety,
  - A' represents an activator moiety that, upon removal of P', is capable of causing cleavage of the cleavable linker group from the solid surface;
- m = 1 or 2;
- L0 represents a moiety for attachment of the cleavable linker group to the surface;

(b) removing the protecting group P', thereby resulting in a solid surface comprising a plurality of sites represented by:

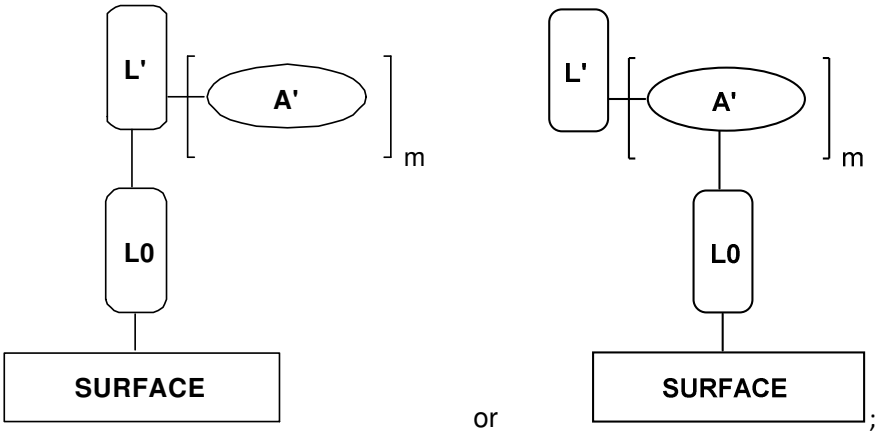

;

(c) thermally controlled deprotection of the cleavable linker L' via activator moiety A' at selected sites and coupling the deprotected sites with:

- a nucleoside represented by the formula:

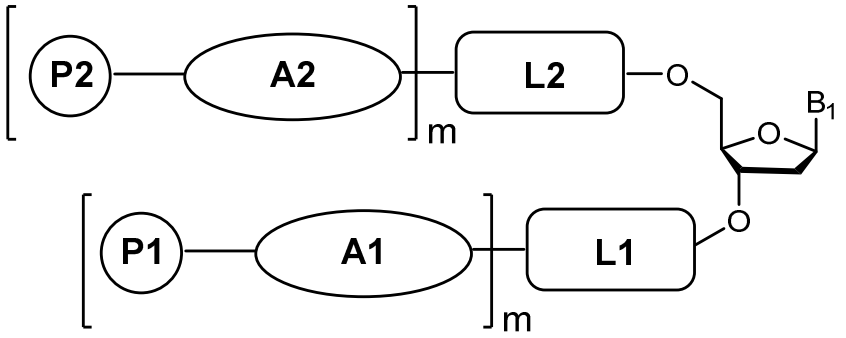

wherein:

- L1-A1-P1 together represents a safety catch linker for attachment at the 3'-OH group of the first nucleoside to the surface, wherein:
  - P1 represents a protecting group,
  - L1 represents a cleavable linker moiety,
  - A1 represents an activator moiety that, upon removal of P1, is capable of causing cleavage of the cleavable linker from the solid surface;
- P2-A2-L2 together represents a safety catch 5'-OH protecting group, wherein:
  - P2 represents a protecting group,
  - L2 represents a cleavable linker moiety,
  - A2 represents an activator moiety that, upon removal of P2, is capable of causing removal of the 5'-OH protecting group;

- m at each occurrence is the same or different, and represents 1 or 2; and
- B_1 represents an optionally protected canonical or an optionally protected non-canonical nucleobase, preferably wherein the nucleobase is one of: adenine (A), cytosine (C), guanine (G) or thymine (T): or

- a di-nucleotide represented by the formula:

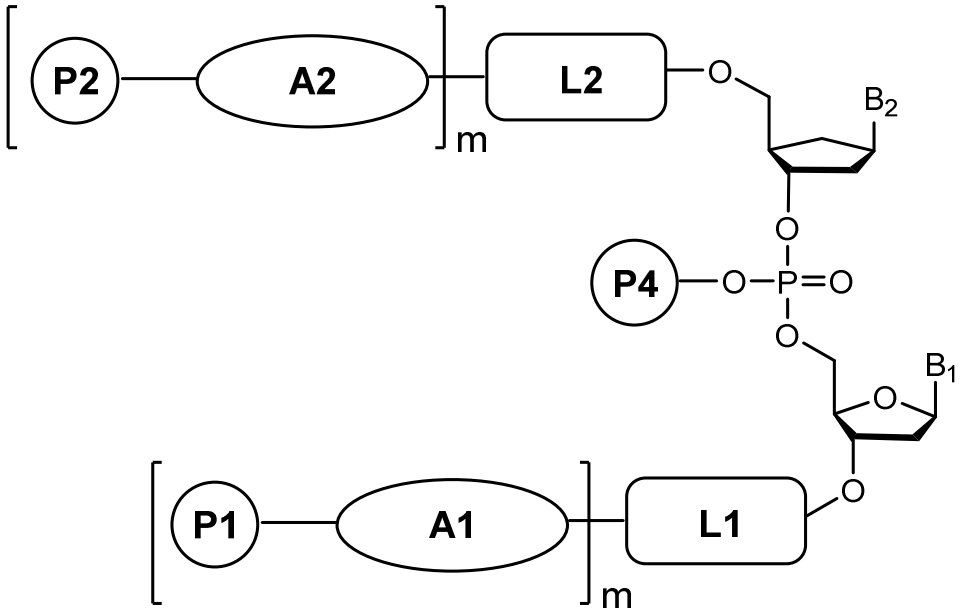

wherein:

- L1-A1-P1 together represents a safety catch linker for attachment at the 3'-OH group of the first nucleoside to the surface, wherein:
  - P1 represents a protecting group,
  - L1 represents a cleavable linker moiety,
  - A1 represents an activator moiety that, upon removal of P1, is capable of causing cleavage of the cleavable linker from the solid surface;
- P2-A2-L2 together represents a safety catch 5'-OH protecting group, wherein:
  - P2 represents a protecting group,
  - L2 represents a cleavable linker moiety,
  - A2 represents an activator moiety that, upon removal of P2, is capable of causing removal of the 5'-OH protecting group;
- P4 represents a phosphate protecting group;

- m at each occurrence is the same or different, and represents 1 or 2; and
- B_1 and B_2 may be the same or different, and each independently represents an optionally protected canonical or an optionally protected non-canonical nucleobase, preferably wherein the nucleobase is one of: adenine (A), cytosine (C), guanine (G) or thymine (T); or

- a tri-nucleotide represented by the formula:

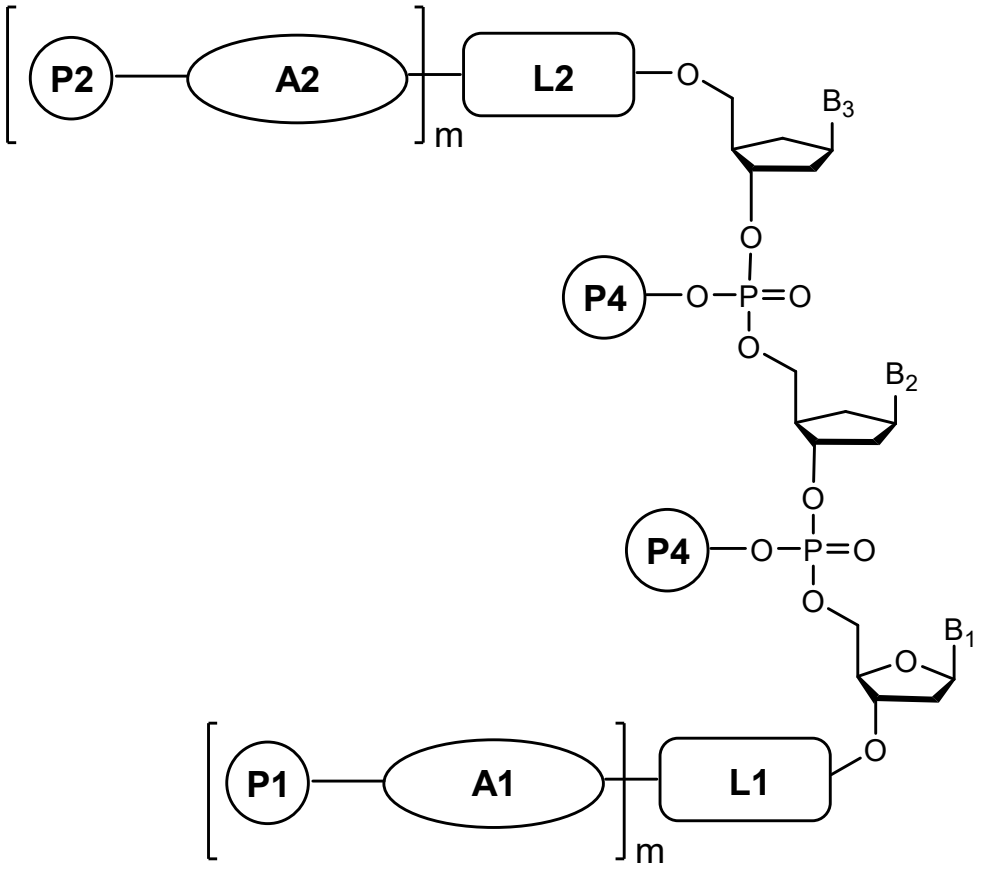

wherein:

- L1-A1-P1 together represents a safety catch linker for attachment at the 3'-OH group of the first nucleoside to the surface, wherein:
  - P1 represents a protecting group,
  - L1 represents a cleavable linker moiety,
  - A1 represents an activator moiety that, upon removal of P1, is capable of causing cleavage of the cleavable linker from the solid surface;
- P2-A2-L2 together represents a safety catch 5'-OH protecting group, wherein:
  - P2 represents a protecting group,

- L2 represents a cleavable linker moiety,
- A2 represents an activator moiety that, upon removal of P2, is capable of causing removal of the 5'-OH protecting group;

- each P4 can be the same or different, and each independently represents a phosphate protecting group;
- m at each occurrence is the same or different, and represents 1 or 2; and
- B_1, B_2 and B_3 may be the same or different, and each independently represents an optionally protected canonical or an optionally protected non-canonical nucleobase, preferably wherein the nucleobase is one of: adenine (A), cytosine (C), guanine (G) or thymine (T);

(d) thermally controlled deprotection of the cleavable linker L' via activator moiety A' at selected sites which were not deprotected in the preceding step, and coupling the deprotected sites with another nucleoside, preferably a nucleoside comprising one of the other three canonical nucleobases; and

(e) repeating step (d) with the other remaining nucleosides;

thereby forming a plurality of sites on a solid surface wherein the solid surface comprises a plurality of 5'-OH-protected nucleosides or nucleotides containing nucleobases, wherein the nucleobases are optionally protected canonical or an optionally protected non-canonical nucleobase, and preferably wherein the nucleobases are A, C, G and T, and wherein the nucleosides are each attached at the 3'-OH to the solid surface via a cleavable linker group L1-A1-P1.

13. A process according to any preceding claim wherein step (i) comprises:

(a) providing a solid surface comprising a plurality of sites, wherein each site is functionalized with thermally labile linker groups, each of which is represented by:

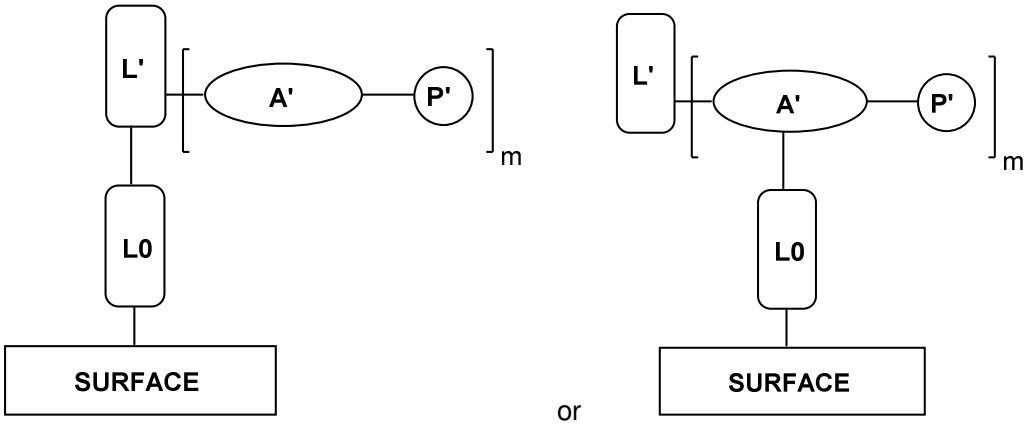

wherein:

- L'-A'-P' together represents a safety catch linker attached to the surface via L0, wherein:
    - P' represents a protecting group,
    - L' represents a cleavable linker moiety,
    - A' represents an activator moiety that, upon removal of P', is capable of causing cleavage of the cleavable linker group from the solid surface;
- m = 1 or 2;
- L0 represents a moiety for attachment of the cleavable linker group to the surface;

(b) removing the protecting group P', thereby resulting in a solid surface comprising a plurality of sites represented by:

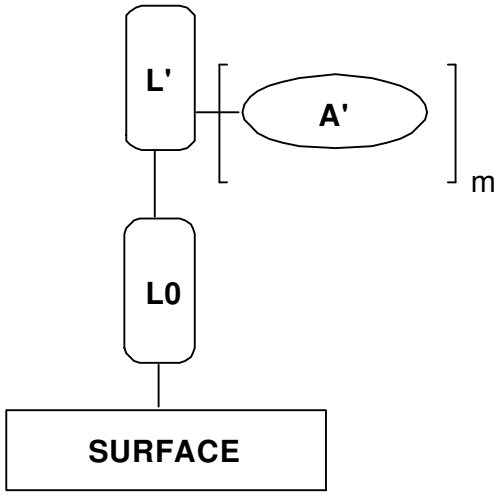

or

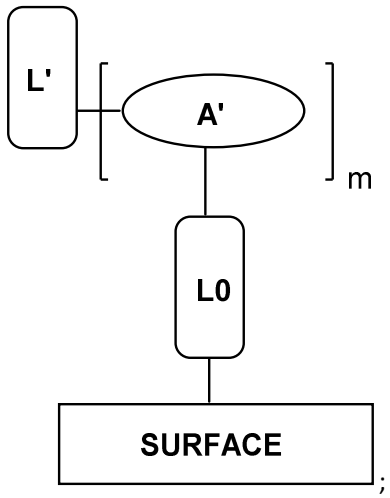

;

(c) thermally controlled deprotection of the cleavable linker L' via activator moiety A' at selected sites and coupling the deprotected sites with a nucleoside represented by the formula:

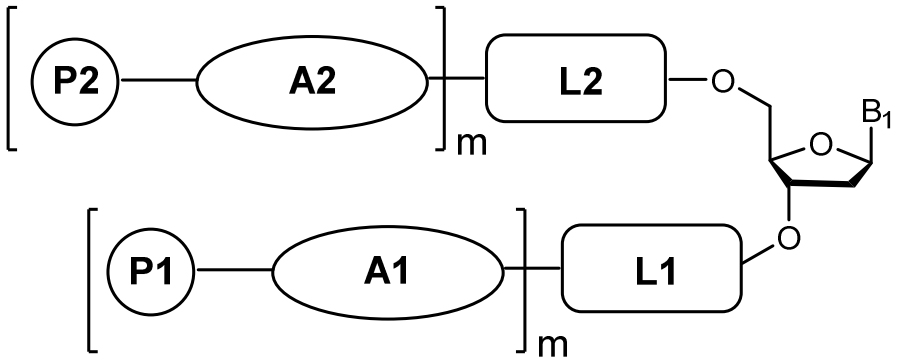

wherein:

- L1-A1-P1 together represents a safety catch linker for attachment at the 3'-OH group of the first nucleoside to the surface, wherein:
    - P1 represents a protecting group,
    - L1 represents a cleavable linker moiety,
    - A1 represents an activator moiety that, upon removal of P1, is capable of causing cleavage of the cleavable linker from the solid surface;
- P2-A2-L2 together represents a safety catch 5'-OH protecting group, wherein:
    - P2 represents a protecting group,
    - L2 represents a cleavable linker moiety,
    - A2 represents an activator moiety that, upon removal of P2, is capable of causing removal of the 5'-OH protecting group;
- m at each occurrence is the same or different, and represents 1 or 2; and
- B_1 represents an optionally protected canonical or an optionally protected non-canonical nucleobase, preferably wherein the nucleobase is one of: adenine (A), cytosine (C), guanine (G) or thymine (T),

(d) thermally controlled deprotection of the cleavable linker L' via activator moiety A' at selected sites which were not deprotected in the preceding step, and coupling the deprotected sites with another nucleoside, preferably a nucleoside comprising one of the other three canonical nucleobases; and

(e) repeating step (d) with the other remaining nucleosides;

thereby forming a plurality of sites on a solid surface wherein the solid surface comprises a plurality of 5'-OH-protected nucleosides containing nucleobases, wherein the nucleobases are optionally protected canonical or an optionally protected non-canonical nucleobase, and preferably wherein the nucleobases are A, C, G and T, and wherein the nucleosides are each attached at the 3'-OH to the solid surface via a cleavable linker group L1-A1-P1.

14. A process according to any preceding claim wherein the thermal control of the deprotection of the oligonucleotide is provided by individually thermally addressable sites on a chip.

15. A process according to Claim 1, for the parallel synthesis of one or more oligonucleotides on a plurality of sites on the surface of solid substrate, wherein the solid substrate comprises a chip, said oligonucleotides being the same or different wherein the process comprises:

(i) providing each site with a plurality of nucleosides comprising a 5'-OH thermally cleavable protecting group, wherein the nucleosides are attached to the surface of a solid substrate at the 3'-position via a thermally cleavable linker group:

(ii) thermally controlled deprotection at the 5'-OH of the nucleosides at selected sites on the surface of the chip to form, at each of the selected sites, nucleosides having deprotected 5'-OH groups;

(iii) at each of the selected sites, coupling onto the deprotected 5'-OH groups a nucleoside 3'-phosphoramidite, a di-nucleotide 3'-phosphoramidite, or a tri-nucleotide 3'-phosphoramidite, wherein the nucleoside 3'-phosphoramidite, di-nucleotide 3'-phosphoramidite, or tri-nucleotide 3'-phosphoramidite comprises a thermally cleavable 5'-OH protecting group; and oxidising the resulting phosphite triester group to a phosphate triester group;

(iv) thermally controlled deprotection at the 5'-OH of the nucleosides at selected sites on the surface of the substrate, wherein the selected sites can be the same as, or different from, the selected sites of the preceding step,

(v) at each of the selected sites, coupling onto the deprotected 5'-OH groups, a nucleoside 3'-phosphoramidite, a di-nucleotide 3'-phosphoramidite, or a tri-nucleotide 3'-phosphoramidite, wherein the nucleoside 3'-phosphoramidite, di-nucleotide 3'-phosphoramidite, or tri-nucleotide 3'-phosphoramidite comprises a thermally cleavable 5'-OH protecting group; and oxidising the resulting phosphite triester group to a phosphate triester group; and

(vi) repeating steps (iv) and (v) one or more times to obtain the desired oligonucleotides at each site on the surface of the chip, wherein the chip comprises individually thermally addressable sites; optionally

wherein step (v) comprises:

(v) at each of the selected sites, coupling a nucleoside 3'-phosphoramidite comprising a thermally cleavable 5'-OH protecting group, onto the deprotected 5'-OH groups, and oxidising the resulting phosphite triester group to a phosphate triester group.

16. A process according to any preceding claim wherein the solid substrate comprises a temperature control device for controlling temperatures at a plurality of sites of the solid substrate, comprising:

(i) a plurality of active thermal sites disposed at respective locations on the substrate, each active thermal site comprising a heating element configured to apply a variable amount of heat to a corresponding site of said medium and a thermal insulation layer disposed between the heating element and the substrate; and

(ii) one or more passive thermal regions disposed between the plurality of active thermal sites on the substrate, each passive thermal region comprising a thermal conduction layer configured to conduct heat from a corresponding portion of the medium to the substrate;

wherein the thermal conduction layer of said one or more passive thermal regions has a lower thermal resistance in a direction perpendicular to a plane of the substrate than the thermal insulation layer of said plurality of active thermal sites.

17. A process according to any of Claims 2-16, wherein the thermally cleavable linker group is represented by the formula (L-1):

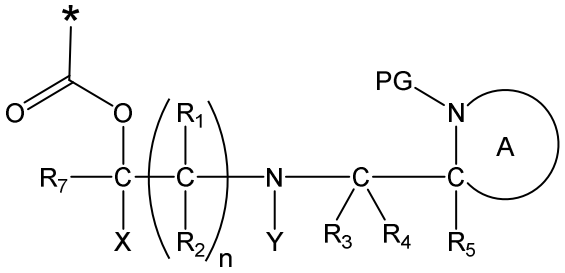

(L-I)

wherein:

- * represents a point of attachment to the 3'-OH of the nucleoside;
- X represents hydrogen or hydrocarbyl;
- Y represents hydrocarbyl or

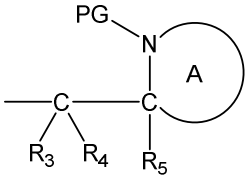

; each of R_1, R_2, R_3, R_4, R_5 and R_7 are the same or different and each independently represents hydrogen or hydrocarbyl;

- PG represents a cleavable protecting group for nitrogen;
- n represents 0, 1, 2 or 3; and
- ring A represents a nitrogen-containing heterocyclic group;

wherein at each occurrence R_1, R_2, R_3, R_4, R_5, PG and A may be the same or different,

which is bound to the substrate at one of R_1, R_2, R_3, R_4, R_5, R_7, X, Y or A, preferably which is bound to the substrate at R_7 or Y, and preferably which is bound to the substrate at R_7 when Y is:

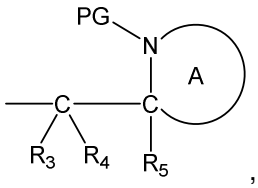

,

or wherein the cleavable linker is bound to the substrate at Y when Y is hydrocarbyl;

optionally wherein at least one of the protecting groups PG is cleavable under a first reaction condition to produce a deprotected linker, wherein the deprotected linker can undergo intramolecular cyclisation and cleavage with release of carbon dioxide under a second, different, reaction condition, to produce a compound of formula (II):

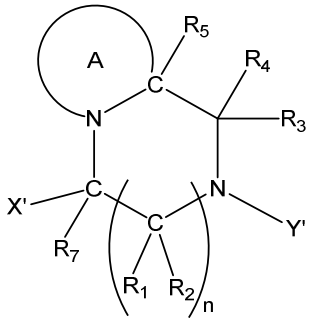

(II)

thereby releasing the oligonucleotide from the surface;
wherein PG' is hydrogen or a cleavable protecting group for nitrogen, provided that at least one PG' is hydrogen;

- Y' represents hydrocarbyl, or

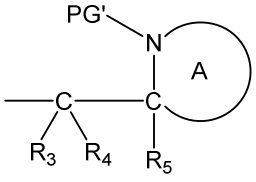

; and/or

wherein Y represents hydrocarbyl, preferably wherein Y represents a C_{1-20} hydrocarbyl or a a C_{1-10} or particularly a C_{1-6} hydrocarbyl, more preferably wherein the C_{1-20} or C_{1-10} or C_{1-6} hydrocarbyl is alkyl, aryl, alkaryl and arylalkyl, alkenyl, or alkynyl, and most preferably wherein Y is C_{1-10} alkyl or C_{6-10} aryl.

18. A process according to any preceding claim wherein the 5'-OH protecting group is represented by the formula (L-1'):

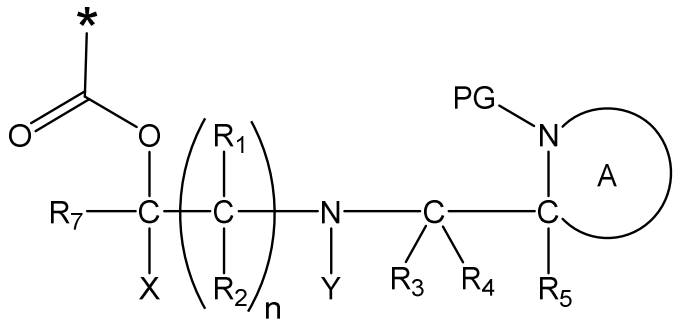

(L-I')

wherein:

- * represents a point of attachment to the 5'-OH of the nucleoside;
- X represents hydrogen or hydrocarbyl;
- Y represents hydrocarbyl or

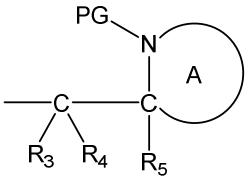

;

- each of R_1, R_2, R_3, R_4, R_5 and R_7 are the same or different and each independently represents hydrogen or hydrocarbyl;
- PG represents a cleavable protecting group for nitrogen which is different from the PG group in formula L-1;
- n represents 0, 1, 2 or 3; and
- ring A represents nitrogen-containing heterocyclic group;

wherein at each occurrence R_1, R_2, R_3, R_4, R_5, PG and A may be the same or different;

optionally wherein at least one of the protecting groups PG is cleavable under a first reaction condition to produce a deprotected linker, wherein the deprotected linker can undergo intramolecular cyclisation and cleavage with release of carbon dioxide under a second, different, reaction condition, to produce a compound of formula (II):

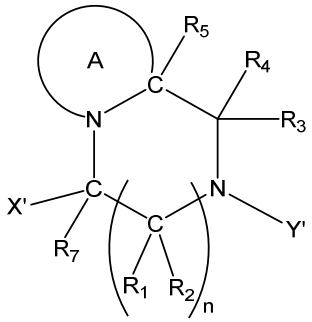

(II)

thereby deprotecting the 5'-OH group of the nucleoside;

wherein

- PG' is hydrogen or a cleavable protecting group for nitrogen, provided that at least one PG' is hydrogen;
- Y' represents hydrocarbyl, or

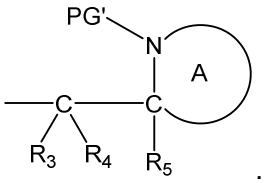

.

19. A process according to Claim 18, wherein the 5'-OH protecting group has the formula (IB'):

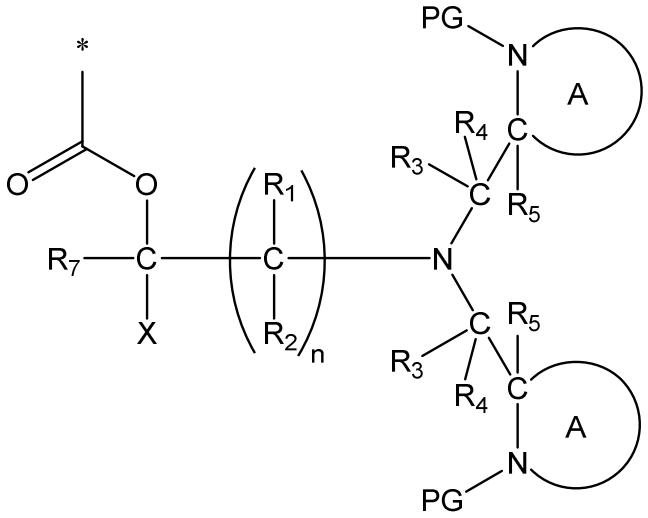

(IB')

, optionally

wherein R_1-R_5, PG and A at each occurrence in formula (IB), is the same;

and/or

wherein at least one of the protecting groups PG is cleavable under a first reaction condition to produce a compound of formula (IB*'):

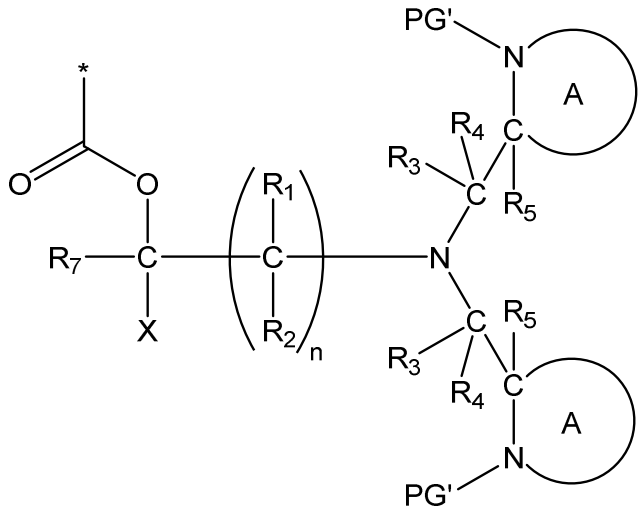

(IB*)

wherein

- PG' is hydrogen or a cleavable protecting group for nitrogen, provided that at least one PG' is hydrogen;

wherein the compound of Formula (IB*) can undergo intramolecular cyclisation and cleavage with release of carbon dioxide under a second, different reaction condition, to produce a compound of formula (IIB'):

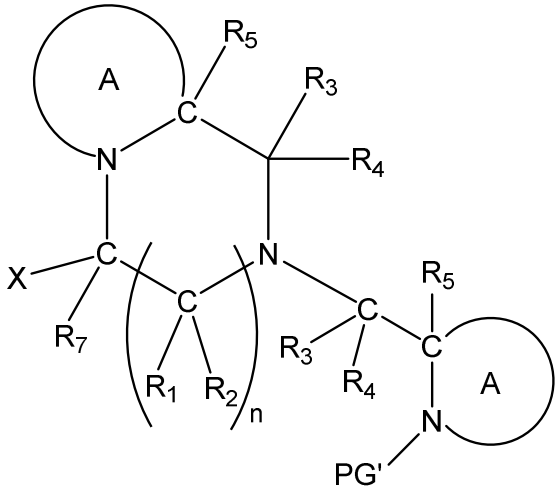

(IIB')

,

thereby removing the protecting group at 5'-OH.

20. A process according to any of Claims 17-19, wherein ring A represents a 4-12 membered mono-, bi- or tri-cyclic, preferably mono- or bicyclic nitrogen-containing

heterocyclic group, and which may contain, in addition to the nitrogen, one or more other heteroatoms selected from N, O or S, preferably O or N; optionally wherein:

ring A represents a 4 to 8-membered monocyclic heterocyclic group; or
ring A represents a 5, 6, or 7-membered monocyclic heterocyclic group; orring A represents a heterocycle selected from: piperidyl, morpholinyl, pyrrolidinyl, thiomorpholinyl, and imidazolyl; or
ring A represents piperidyl, pyrrolidinyl or imidazolyl; or ring A represents piperidyl, or pyrrolidinyl.

21. A process according to any of Claims 17-20, wherein at each occurrence of -C(R_3)(R_4), one of R_3 or R_4 is hydrocarbyl, and the other is H, or wherein R_3 and R_4 at each occurrence, represents H.

22. A process according to any of Claims 17-21, wherein n is 0, 1 or 2; and preferably wherein n is 0 or 1, and optionally wherein n is 1.

23. A process according to any of Claims 17-22 wherein X is H or hydrocarbyl, wherein the hydrocarbyl is selected from the group consisting of alkyl, aryl or arylalkyl, preferably wherein the alkyl, aryl or arylalkyl is C_{1-20}, C_{1-10} or C_{1-8} and more preferably wherein X is H, C_{1-10} alkyl, C_{6-10} aryl or C_{7-12} arylalkyl; and most preferably wherein X is H, C_{1-6} alkyl, C_{6-10} aryl or C_{7-12} arylalkyl; and particularly wherein X is H or phenyl, or wherein X is H.

24. A process according to any of Claims 17-23 wherein R_1 and R_2 are independently selected from H, alkyl, aryl or arylalkyl, preferably wherein the alkyl, aryl or arylalkyl is C_{1-20}, C_{1-10} or C_{1-6}, more preferably wherein R is H, C_{1-10} alkyl, C_{6-10} aryl or C_{7-12} arylalkyl, and most preferably wherein R_1 and R_2 are H; and/or wherein R_3 and R_4 are independently selected from H, alkyl, aryl or arylalkyl, preferably wherein the alkyl, aryl or arylalkyl is C_{1-20}, C_{1-10} or C_{1-6}, more preferably wherein R is H. C_{1-10} alkyl, C_{6-10} aryl or C_{7-12} arylalkyl, and most preferably wherein R_1 and R_2 are H; and/or wherein R_5 is H.

25. A process according to any of Claims 17-24, wherein cleavage of at least one protecting group PG can be activated by pH, temperature, radiation, or by a chemical activating agent, or by a combination thereof, optionally wherein:

the cleavage of at least one protecting group PG can be activated by pH, temperature, a chemical activation agent, or by a combination thereof; and/or

wherein at least one protecting group PG is thermally cleavable optionally in the presence of an activating agent; and/or

wherein at least one protecting group PG is not thermally cleavable in the absence of an activating agent.

26. A process according to any of Claims 17-25, wherein the activating agent is an acid or a base.

27. A process according to any of Claims 17-26, wherein PG is preferably selected from: tert-butyloxycarbonyl (Boc), trityl (Trt), benzyloxycarbonyl, α,α--dimethyl-3,5-dimethoxybenzyloxycarbonyl (Ddz), 2-(4-biphenyl)isopropoxycarbonyl (Bpoc), 2-nitrophenylsulfenyl (Nps), tosyl (Ts), and more preferably wherein the acid cleavable protecting group is selected from Boc and Trt; optionally wherein PG is preferably selected from: (1,1-dioxobenzo[*b*]thiophene-2-yl)methyloxycarbonyl (Bsmoc), 9-fluorenylmethoxycarbonyl (Fmoc), (1,1-dioxonaphtho[1,2-*b*]thiophene-2-yl)methyloxycarbonyl (α-Nsmoc), 2-(4-nitrophenylsulfonyl)ethoxycarbonyl (Nsc), 2,7-di-tert-butyl-Fmoc, 2-fluoro-Fmoc, 2-monoisooctyl-Fmoc (mio-Fmoc) and 2,7-diisooctyl-Fmoc (dio-Fmoc), 2-[phenyl(methyl)sulfonio]ethyloxycarbonyl tetrafluoroborate (Pms), ethanesulfonylethoxycarbonyl (Esc), 2-(4-sulfophenylsulfonyl)ethoxycarbonyl (Sps), acetyl (Ac), benzoyl (Bz), $CF_3C(=O)$- trifluoroacetamido, and preferably wherein the base cleavable protecting group is selected from Bsmoc, Fmoc, α-Nsmoc, mio-Fmoc, dio-Fmoc, and more preferably Bsmoc; or wherein PG is selected from the group consisting of Boc, Fmoc or Bsmoc, or wherein PG is Alloc.

28. A process according to any of Claims 17-27, wherein at least one Y group is hydrocarbyl, preferably wherein at least one Y is alkyl, alkenyl, aryl, aralkyl, alkaryl, wherein said alkyl, alkenyl, aryl, aralkyl or alkaryl group is substituted with a terminal alkyne group; optionally wherein at least one Y group is alkyl, alkenyl, aryl, aralkyl, alkaryl, which is substituted with a terminal alkynyl group, wherein the terminal alkyne group is a C_2 to C_6 alkynyl group, more preferably a C_2 to C_4 alkynyl group, and most preferably ethynyl; or wherein at least one Y group is aralkyl which is substituted with an alkynyl group and more preferably wherein one Y group is CH_2-(C_6H_4)CH≡CH.

29. A process according to any preceding claim wherein the surface comprises an electrically conductive material, preferably gold or silicon; and/or wherein the attachment of the nucleoside to the surface is via an association with a functionalised carbene or a functionalised alkyne, preferably via an association with a functionalised alkyne, or preferably wherein the association is with a functionalised carbene and gold, or a functionalised alkyne and silicon, and particularly wherein the association is with a functionalised alkyne and silicon.

30. A process according to any preceding claim, further comprising: deprotecting the oligonucleotides at the end of the oligonucleotide synthesis to form a plurality of immobilized oligonucleotides at each site, wherein the oligonucleotides are attached to the surface of a solid substrate at the 3'-position via a thermally cleavable linker group; and optionally further comprising cleavage of the thermally cleavable linker group, thereby releasing the oligonucleotide from the surface; optionally wherein the cleavage of the thermally cleavable linker group is conducted at selected sites on the surface of the solid substrate, thereby providing selective release of oligonucleotides.

31. A process according to any preceding claim, further comprising releasing and hybridising the oligonucleotides to form nucleic acids and releasing the nucleic acids from the surface.

32. A microarray comprising one or more nucleotides, oligonucleotides or nucleic acids on a plurality of sites on the surface of a solid substrate, wherein the nucleotides, oligonucleotides or double stranded nucleic acids are bound to the surface by a thermally cleavable linker; optionally wherein the nucleotides, oligonucleotides or double stranded nucleic acids are bound to the surface by a thermally cleavable linker as defined according to any of Claims 17 and 20-28.

33. Use of a process according to any of Claim 1-30, or a microarray according to Claim 32 for preparing an oligonucleotide, a nucleic acid, preferably DNA or XNA.