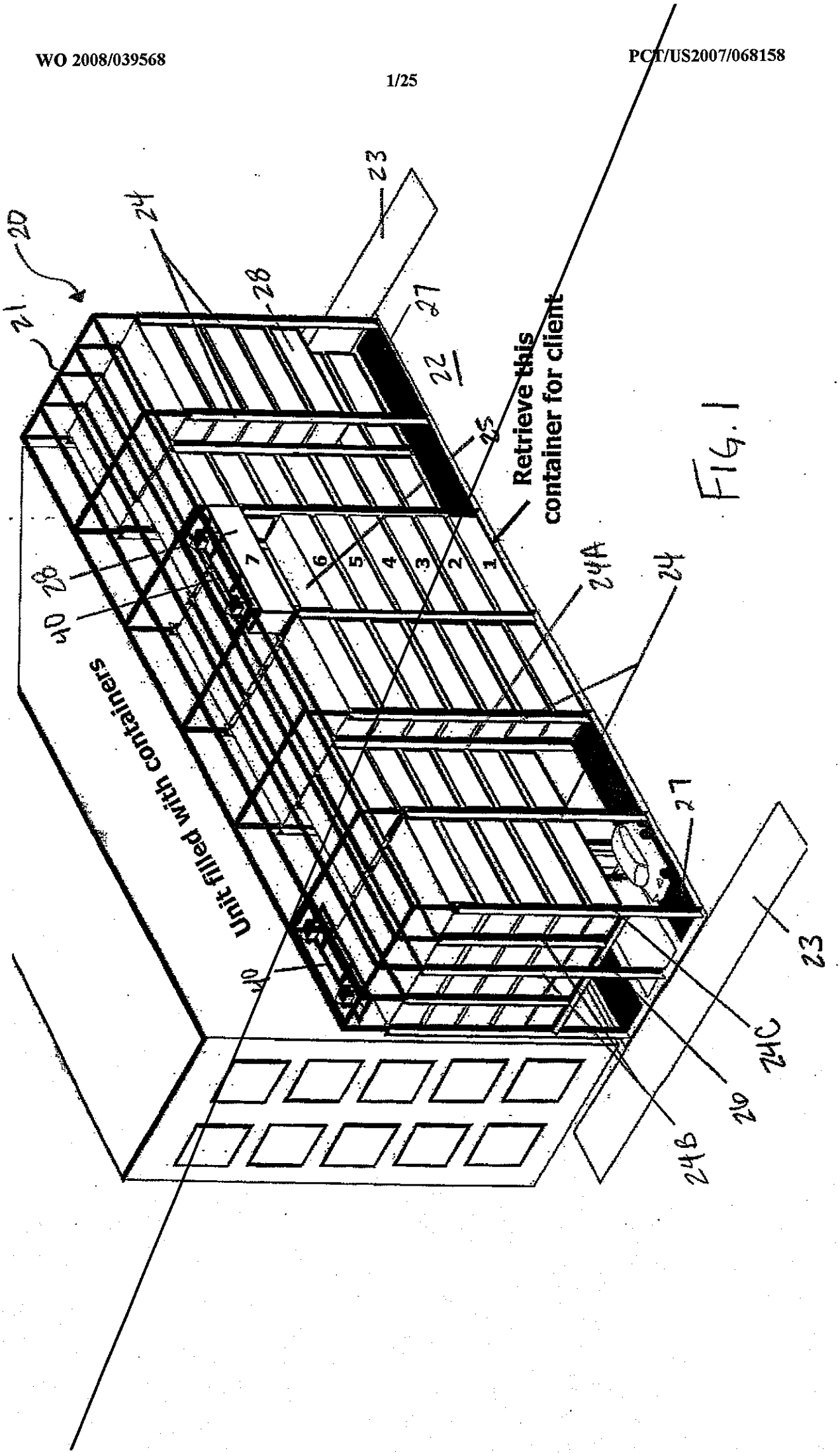
20
21
24
23
28
27
22
25
Retrieve this container for client
7
6
5
4
3
2
1
24A
24
40
28
Unit filled with containers
40
27
23
24C
20
24B

FIG. 1

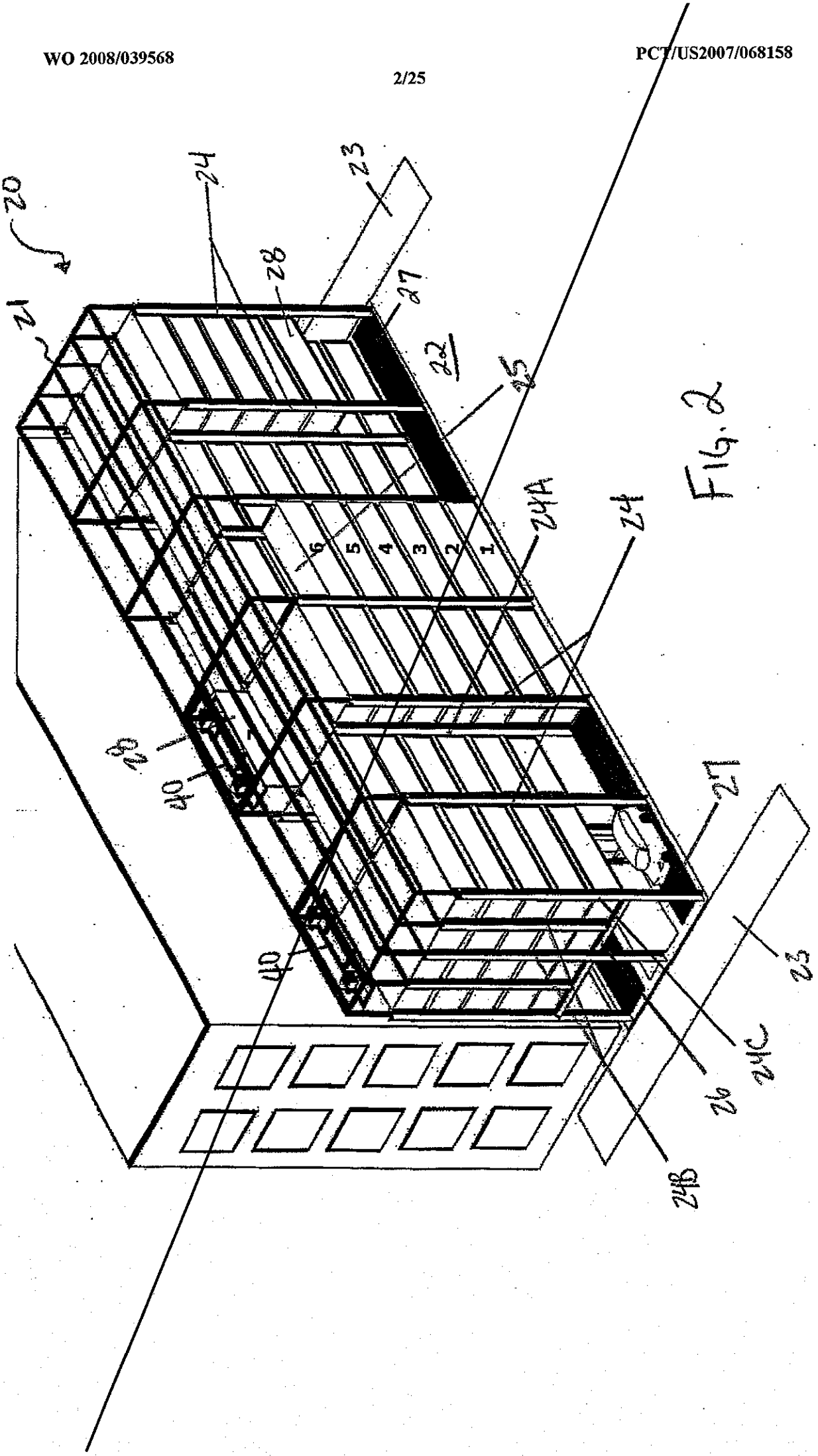

Fig. 2

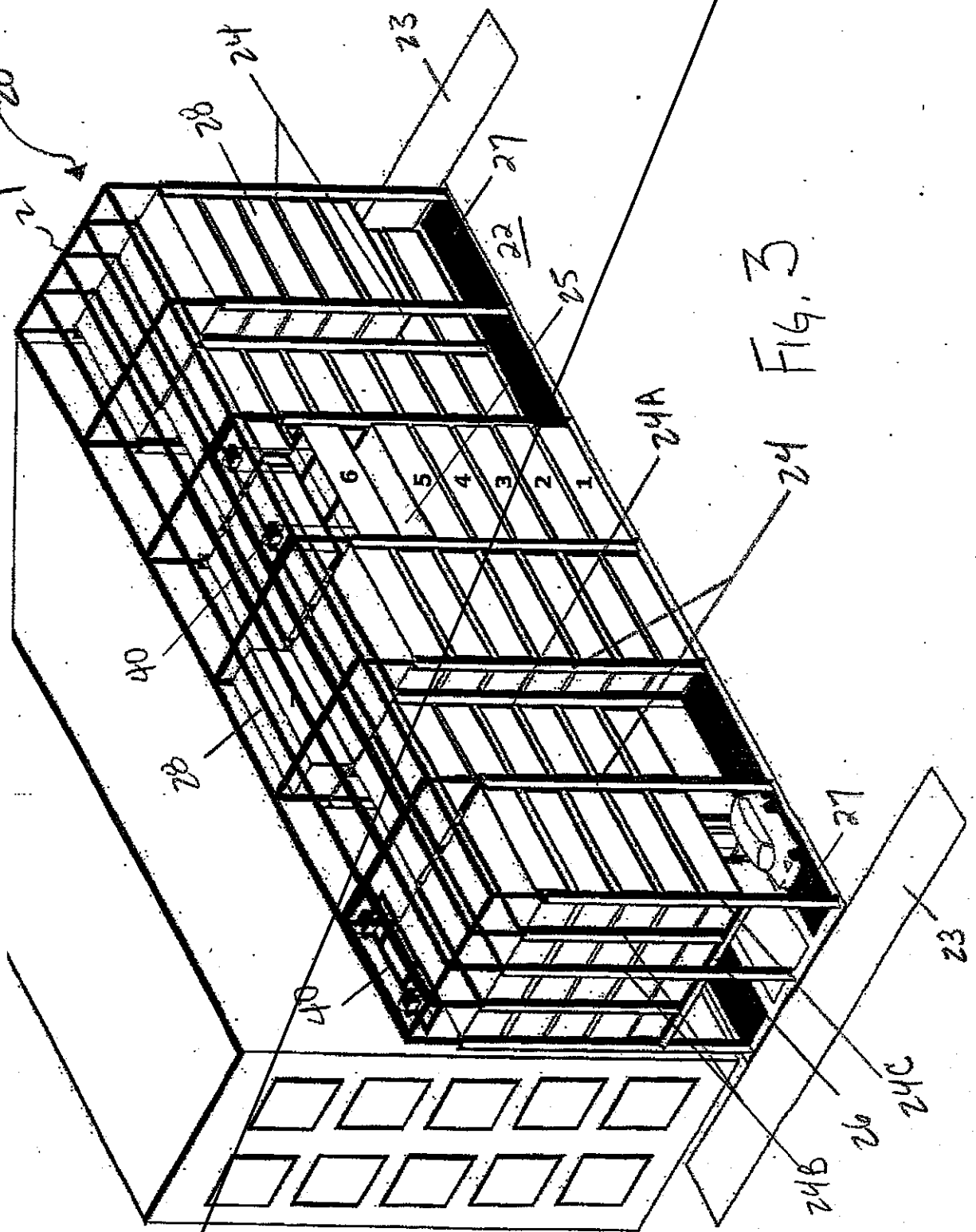

FIG. 3

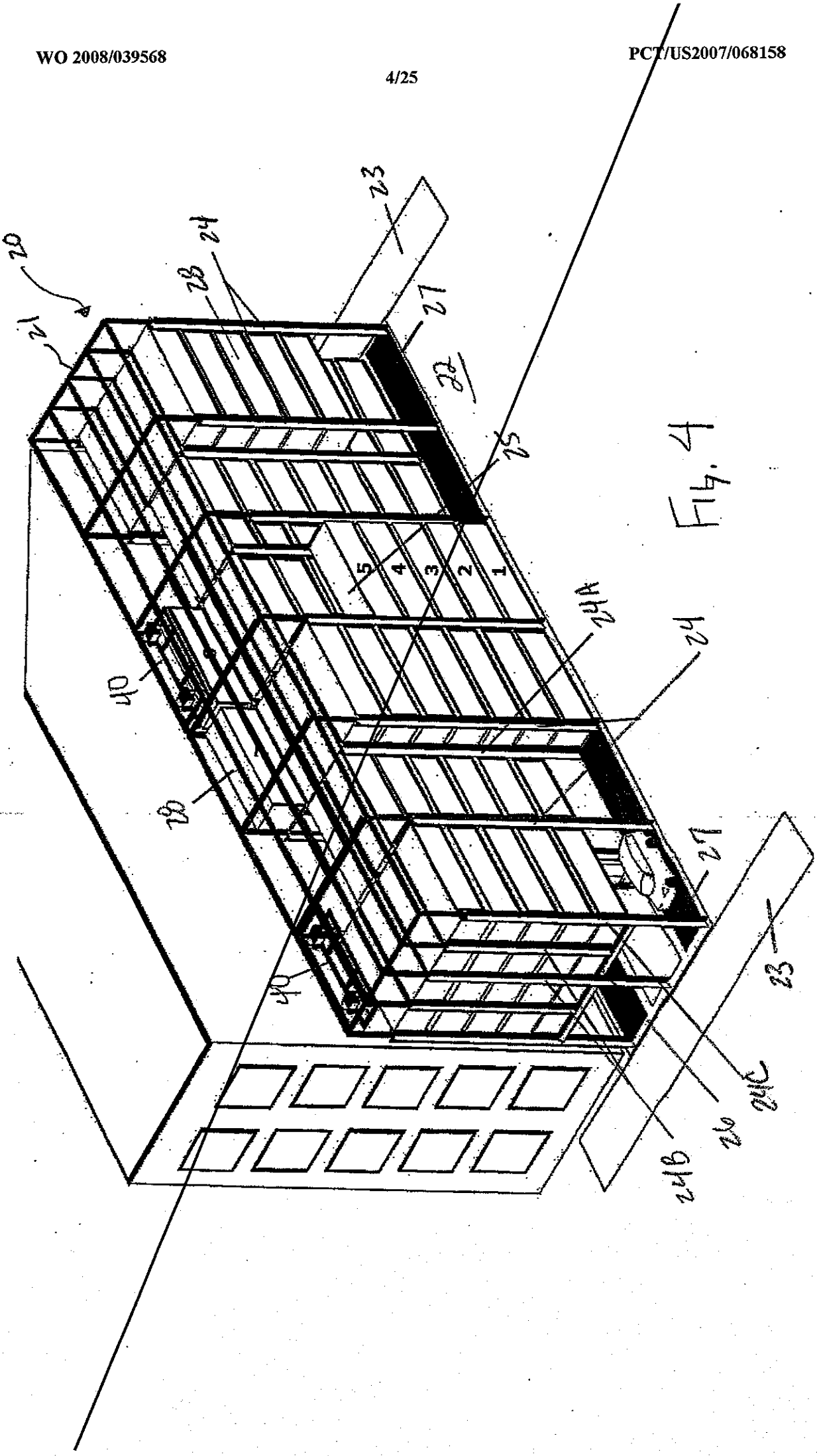

Fig. 4

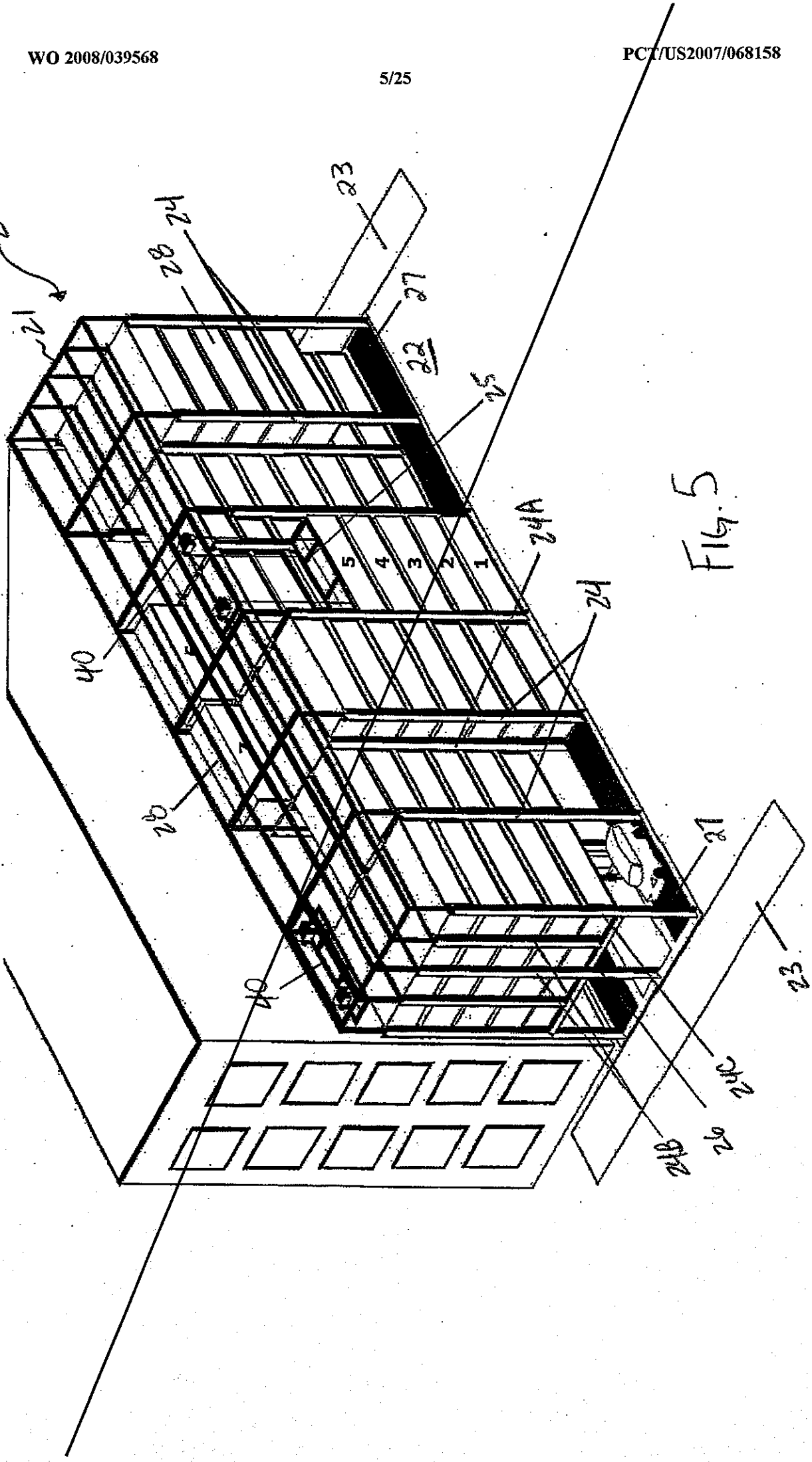

FIG. 5

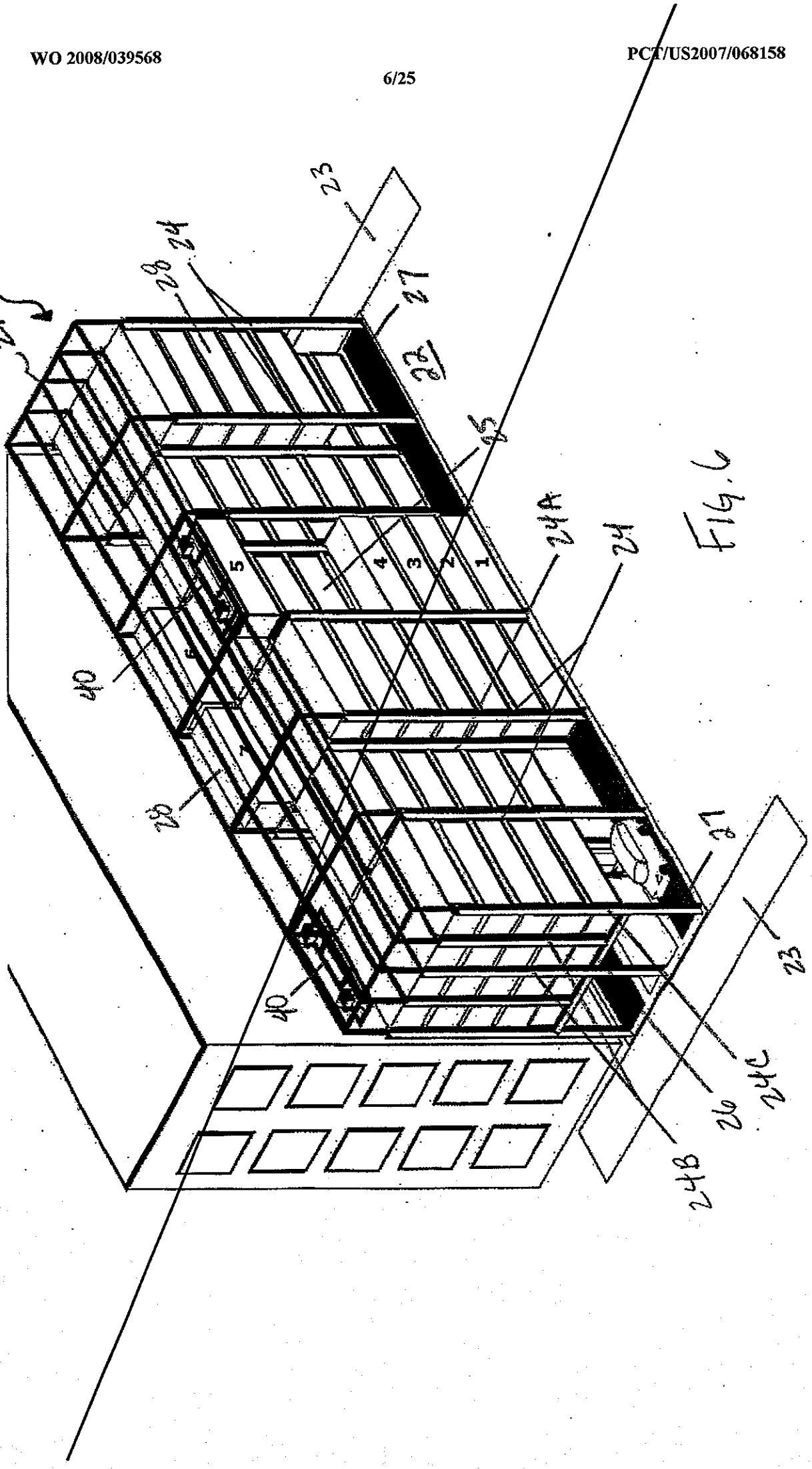

Fig. 6

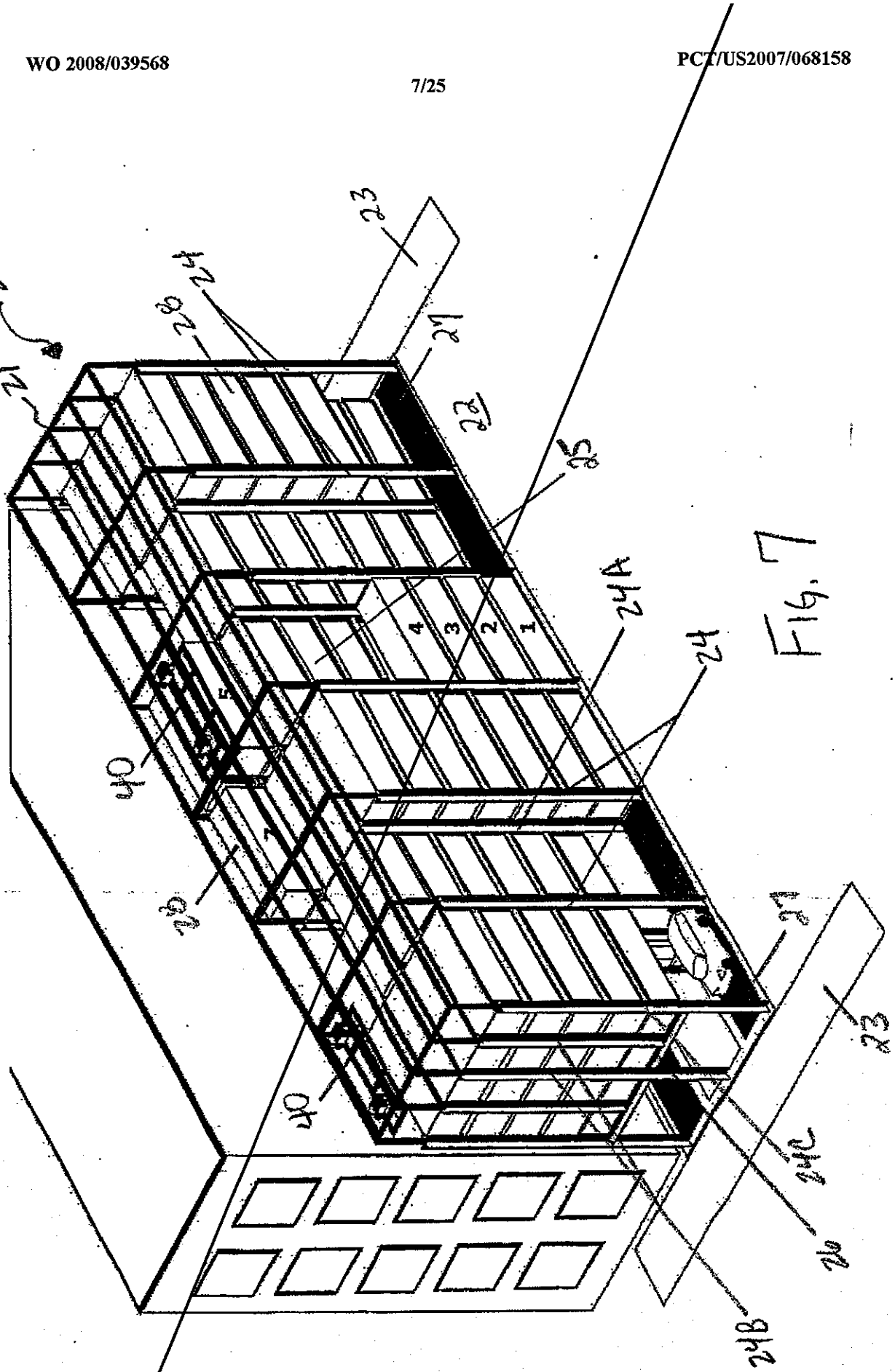

Fig. 7

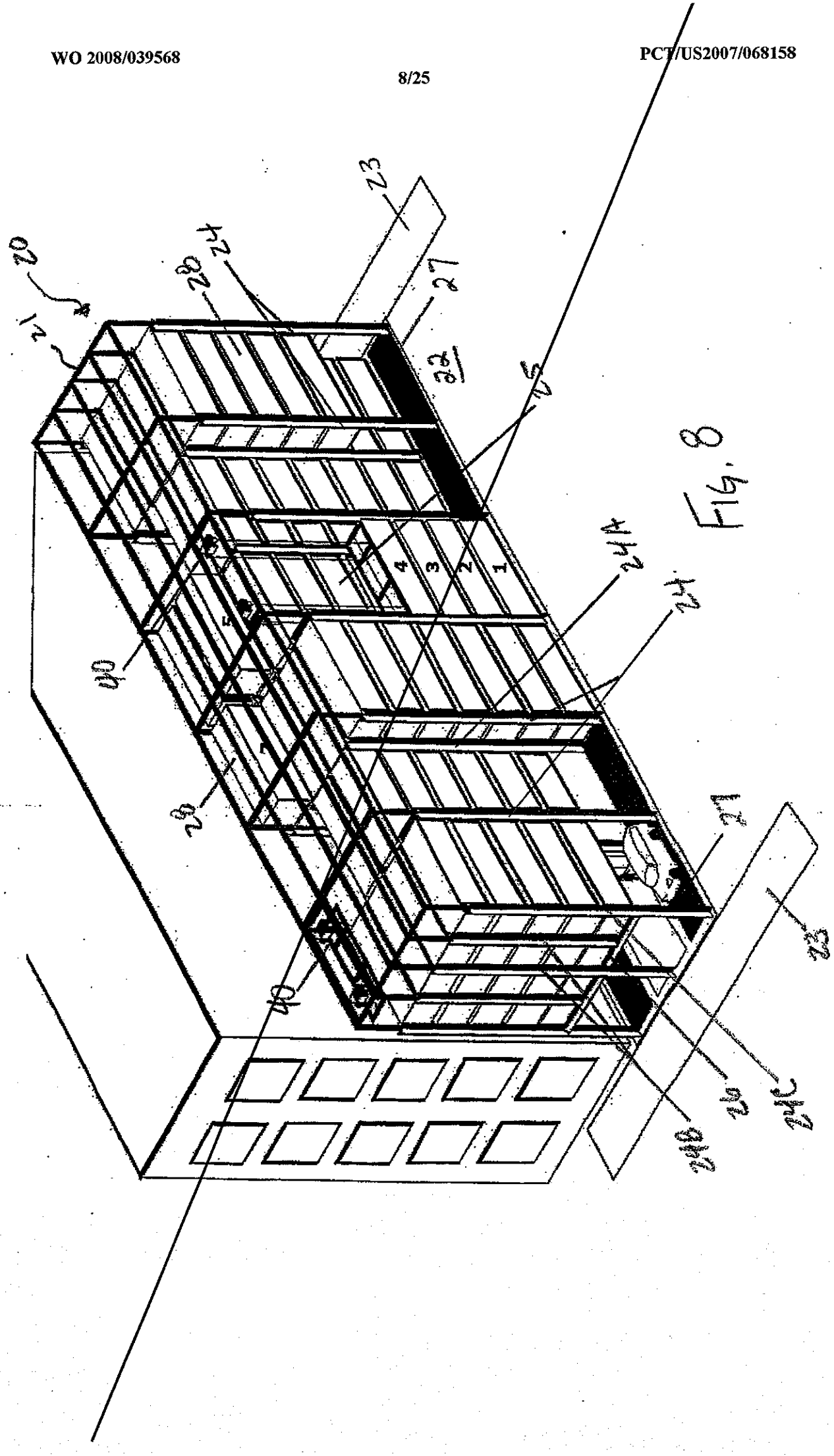

Fig. 8

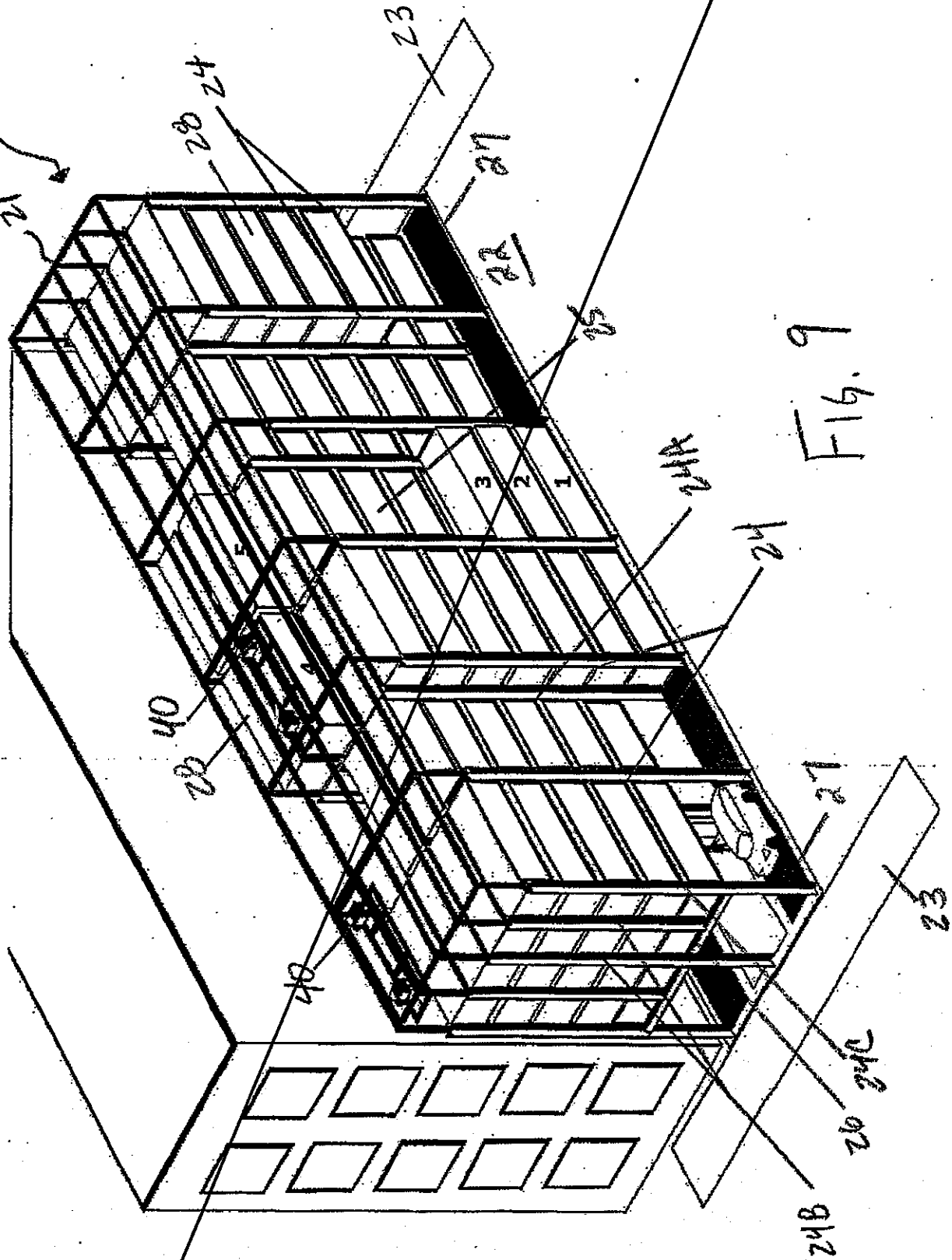

FIG. 9

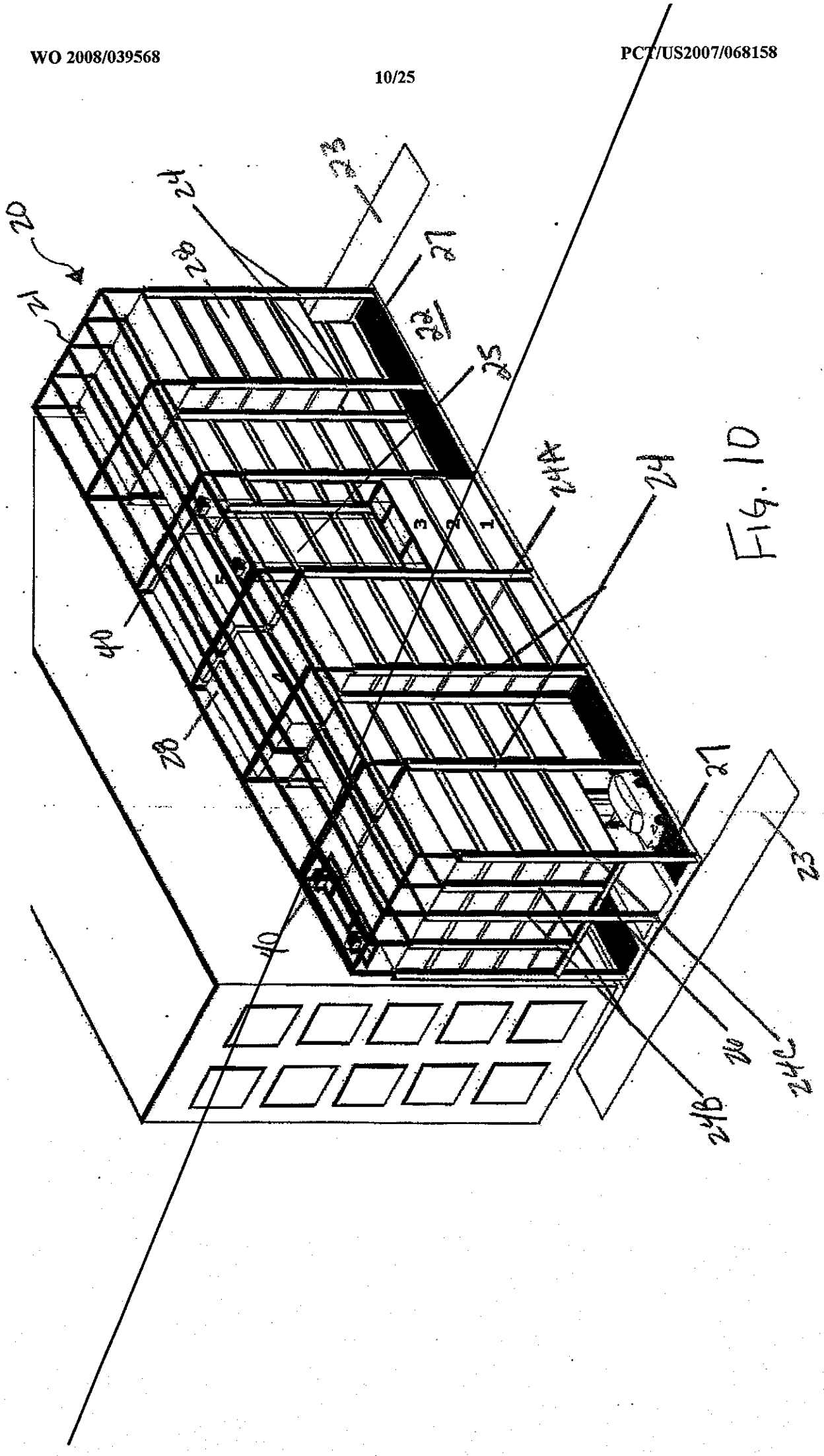

Fig. 1D

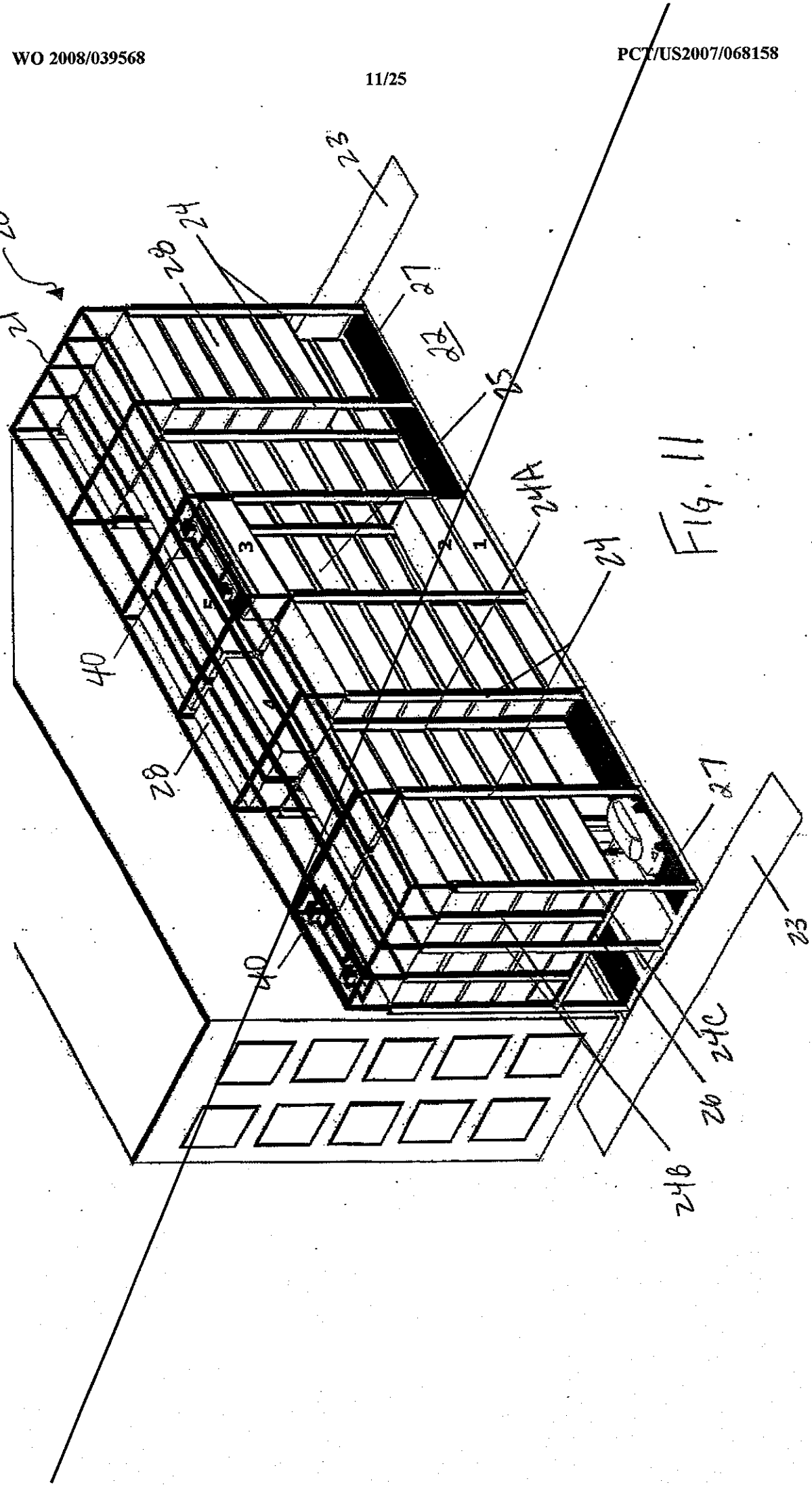

FIG. 11

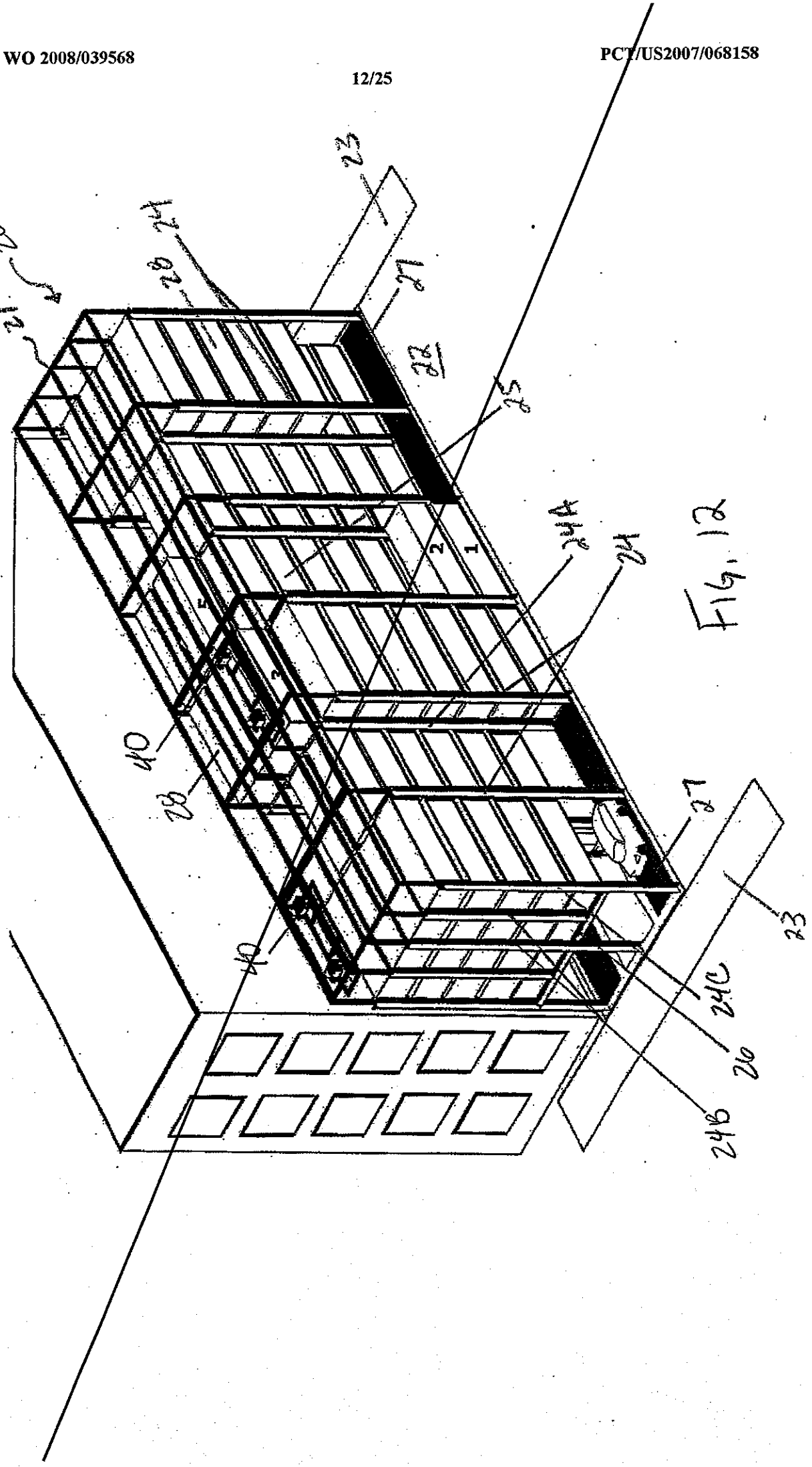

Fig. 12

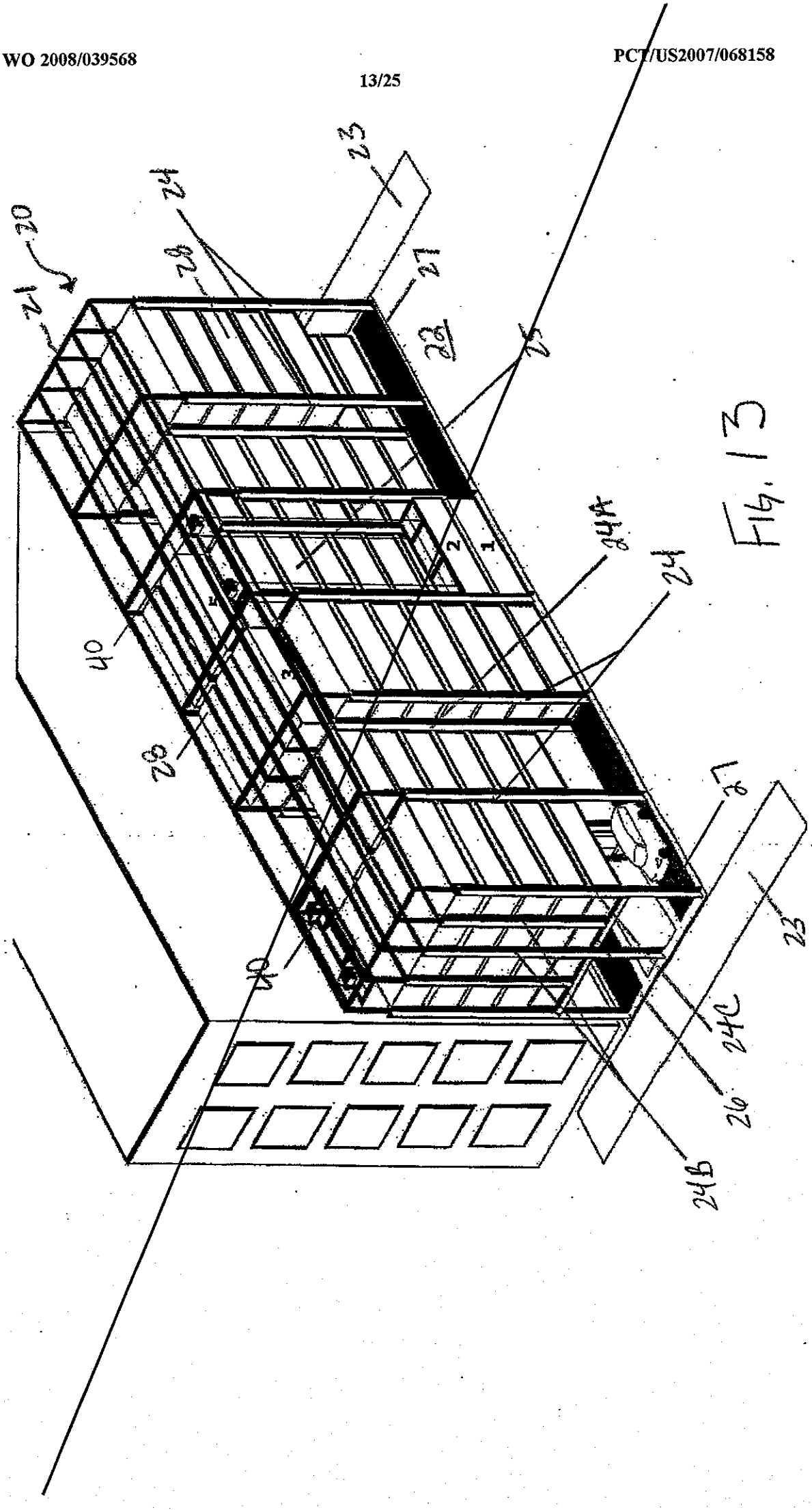

Fig. 13

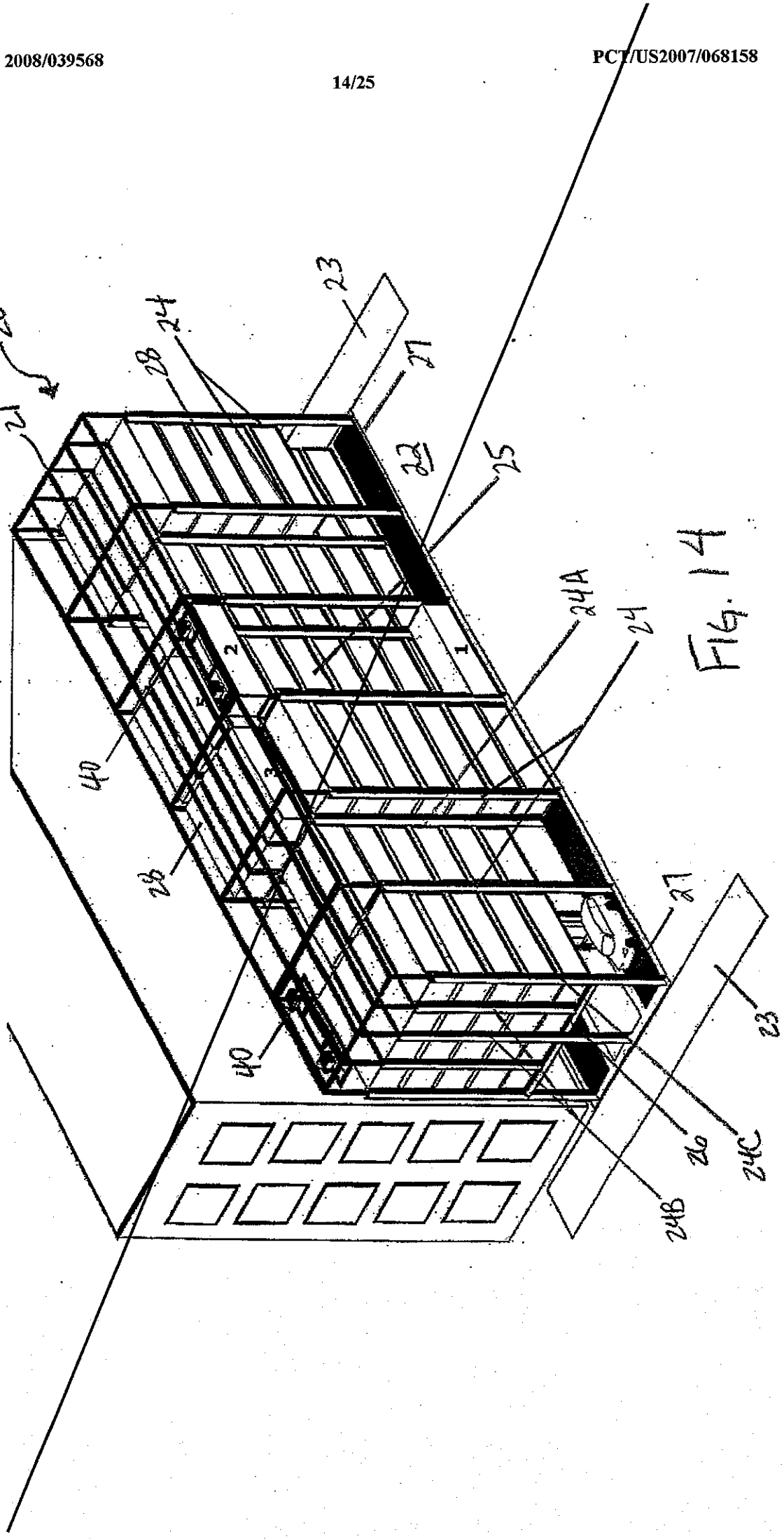

FIG. 14

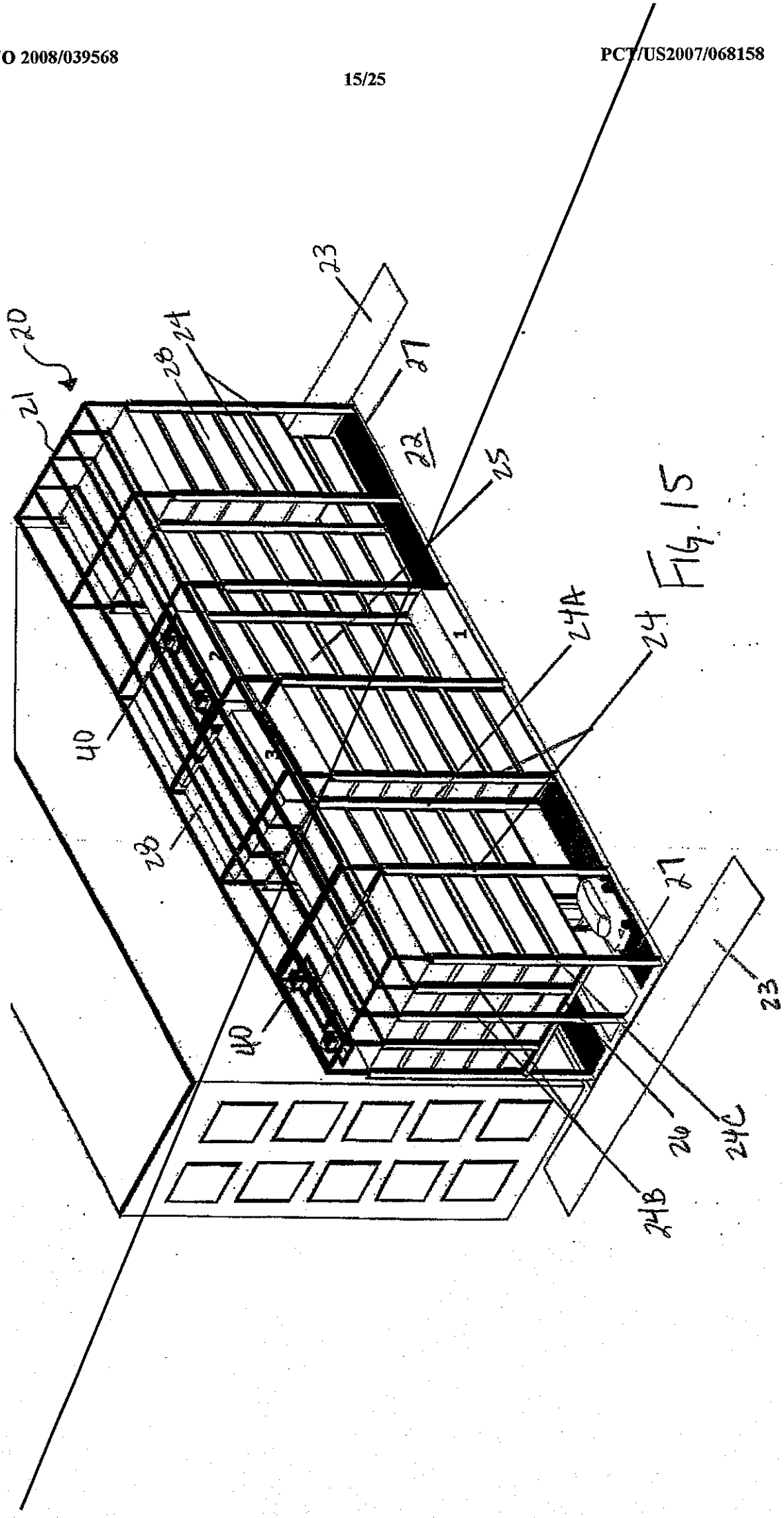

FIG. 15

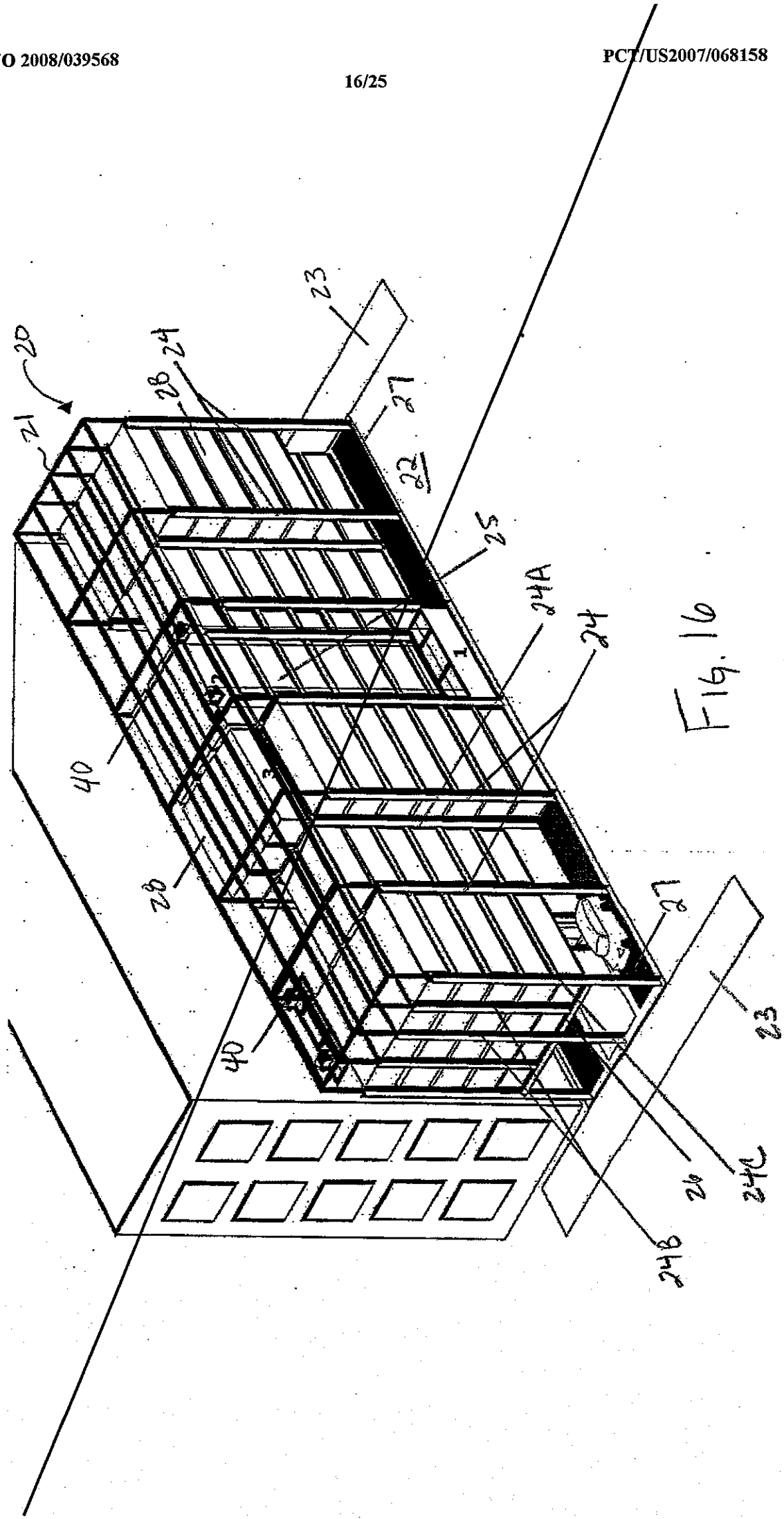

Fig. 16

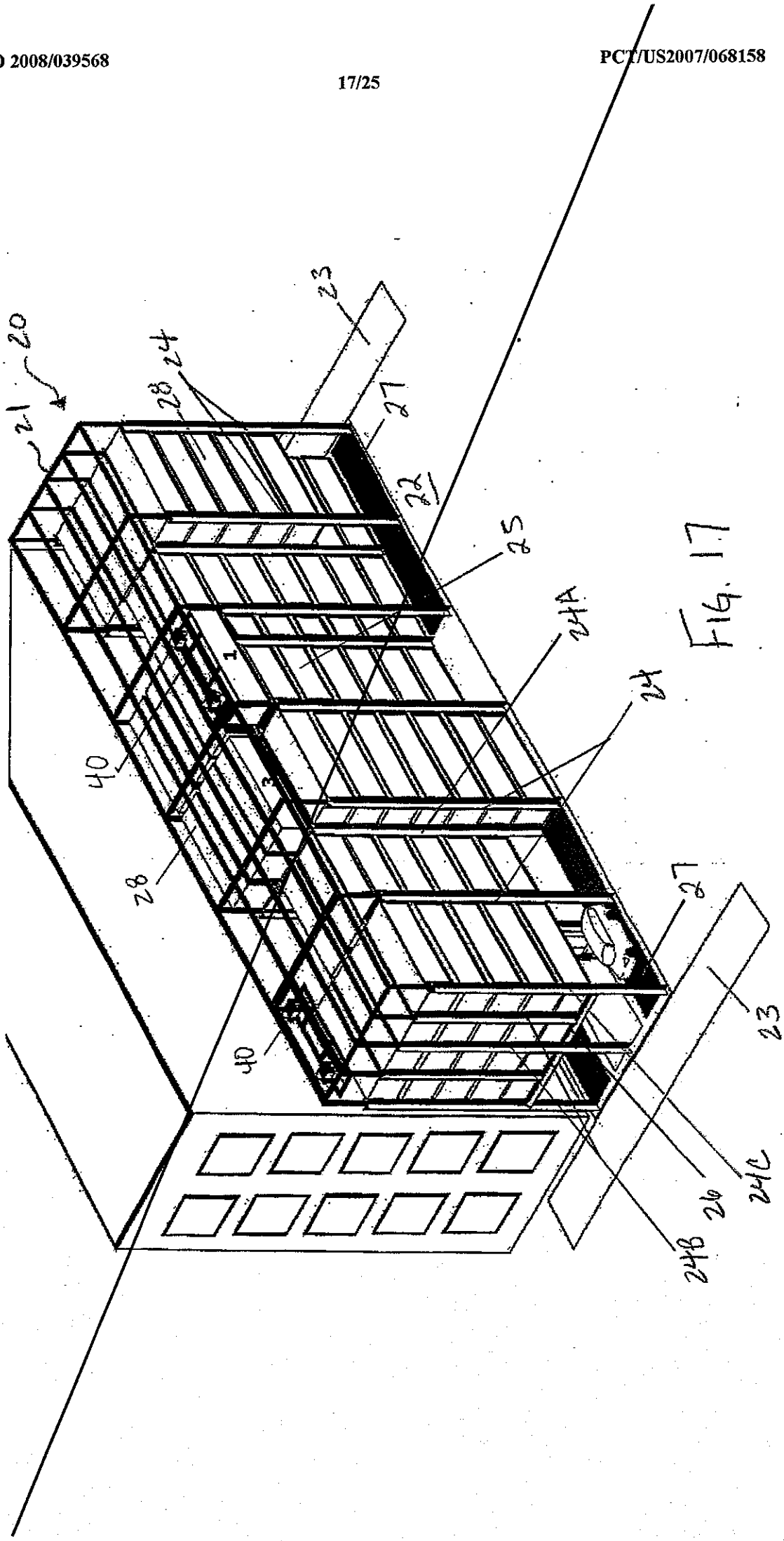

FIG. 17

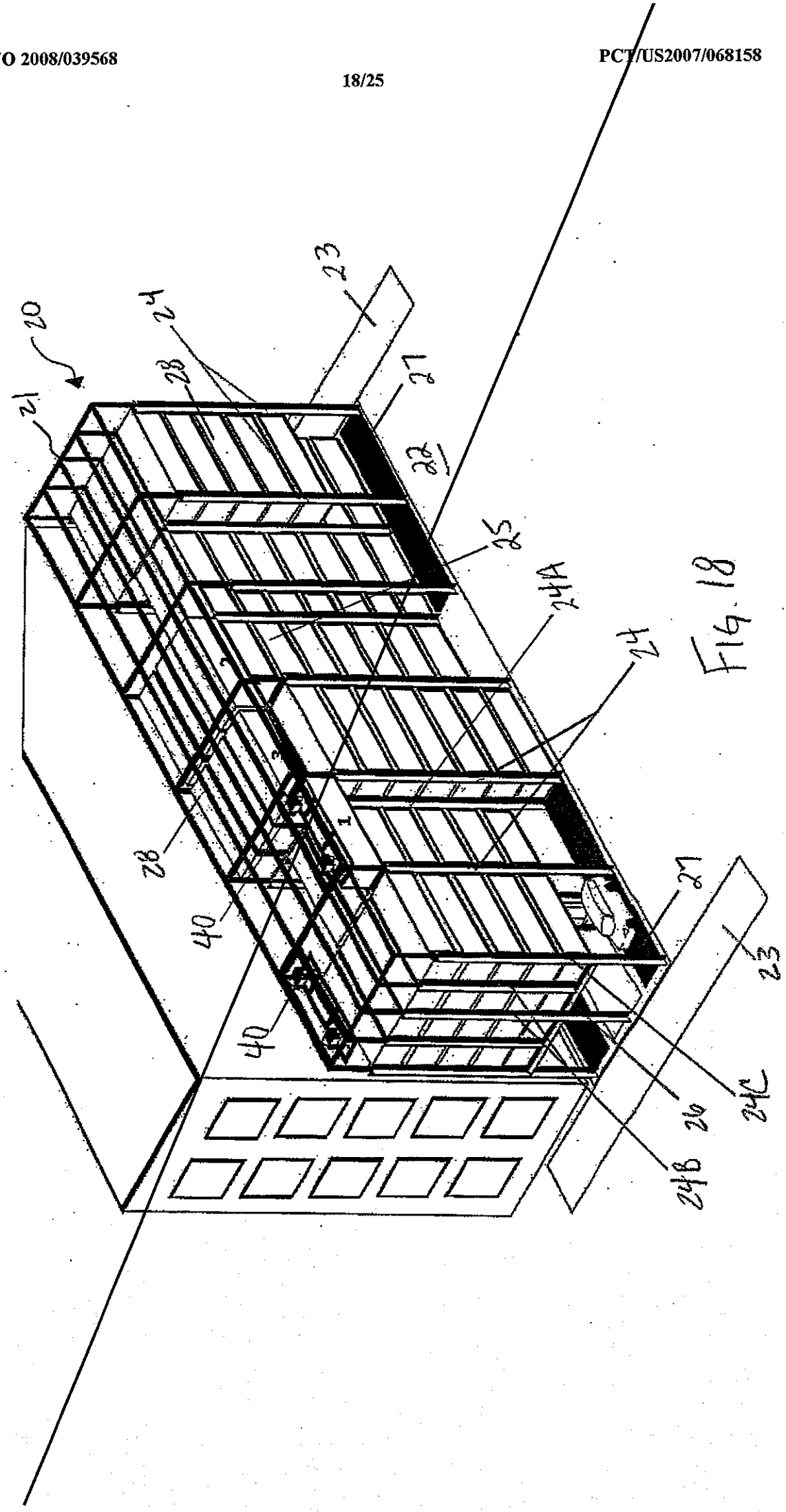

Fig. 18

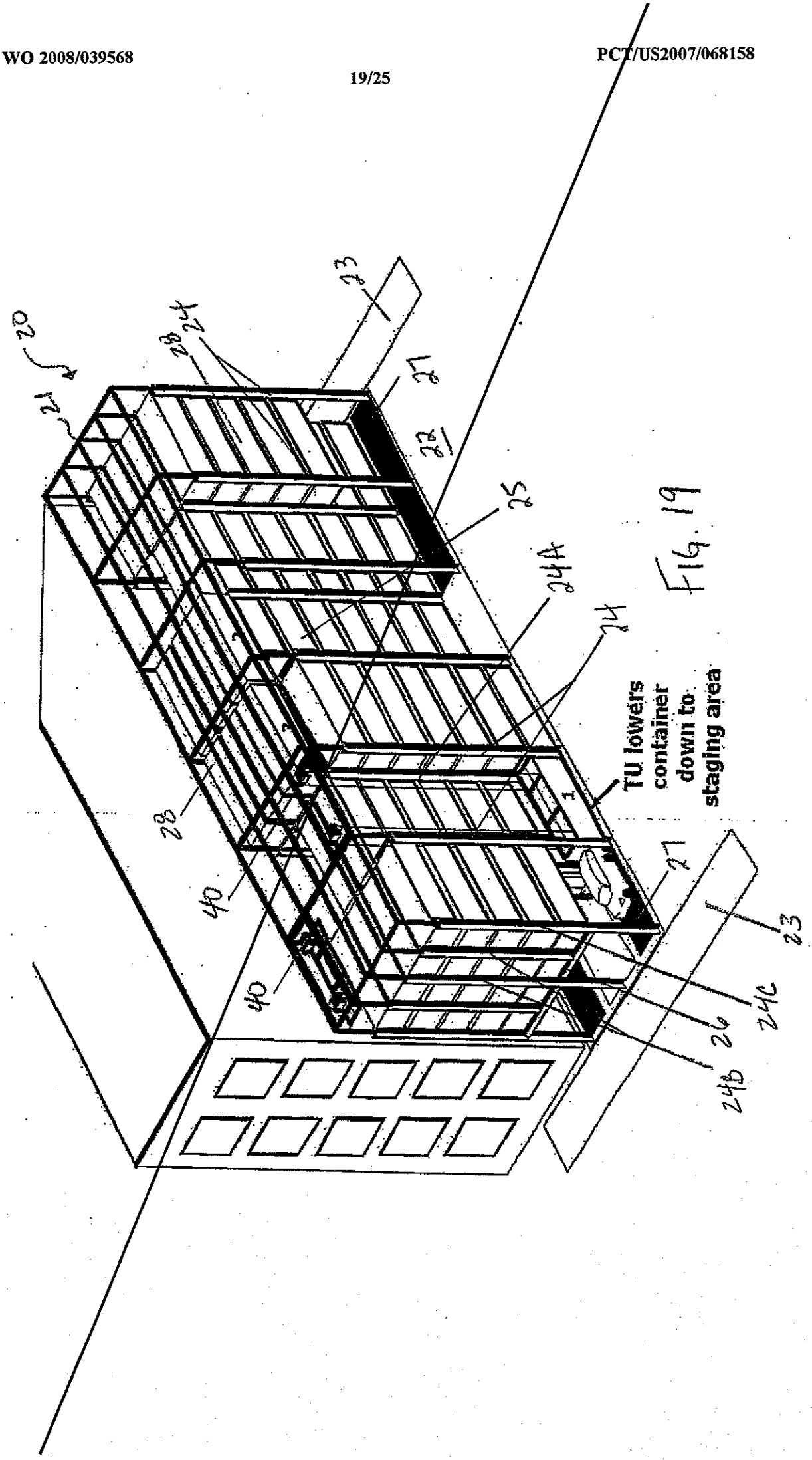
20
21
28
24
23
27
28
25
24A
24
TU lowers container down to staging area
28
40
40
27
23
24C
26
24B

Fig. 19

Transfer Unit

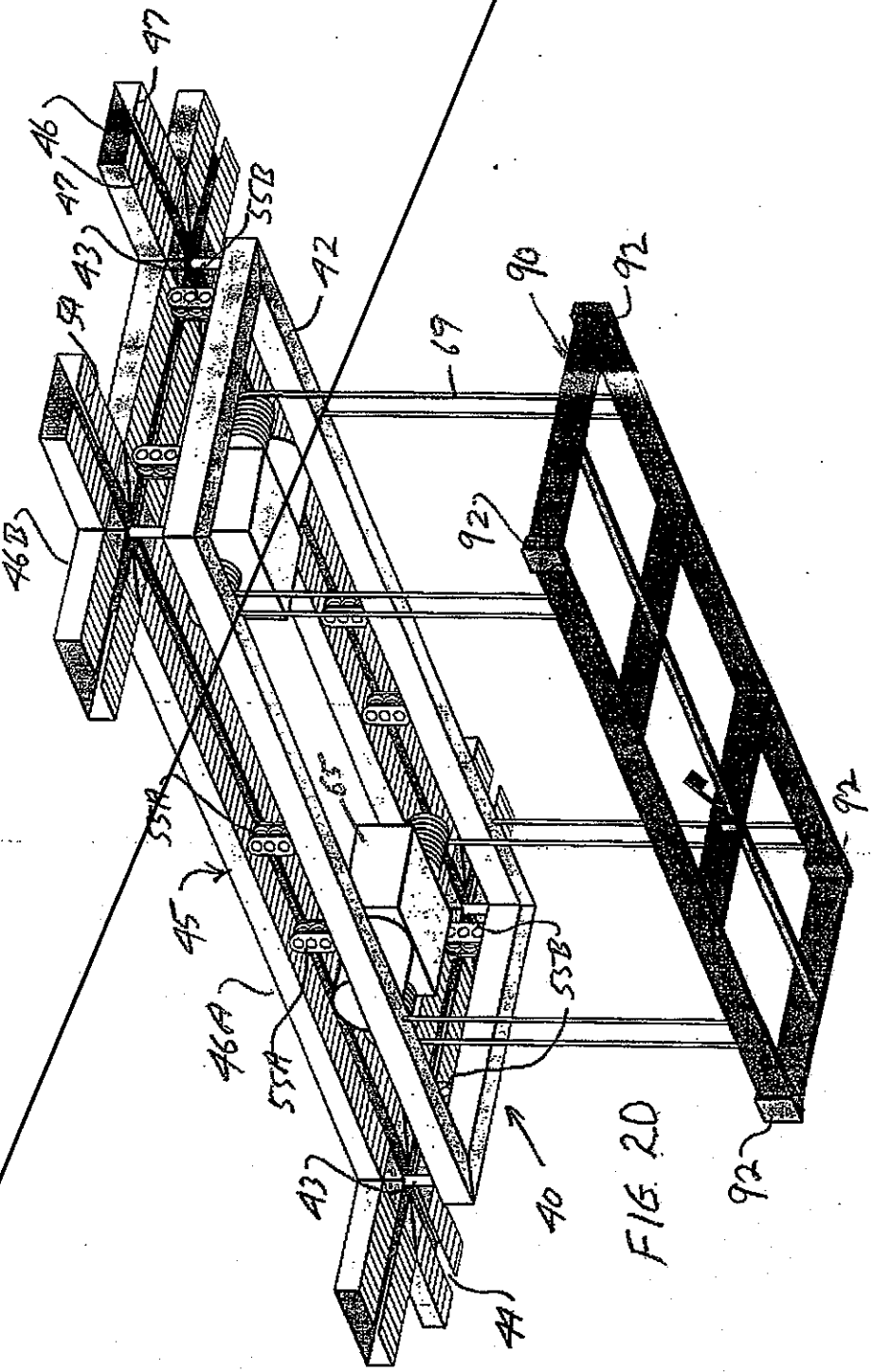

FIG. 2D

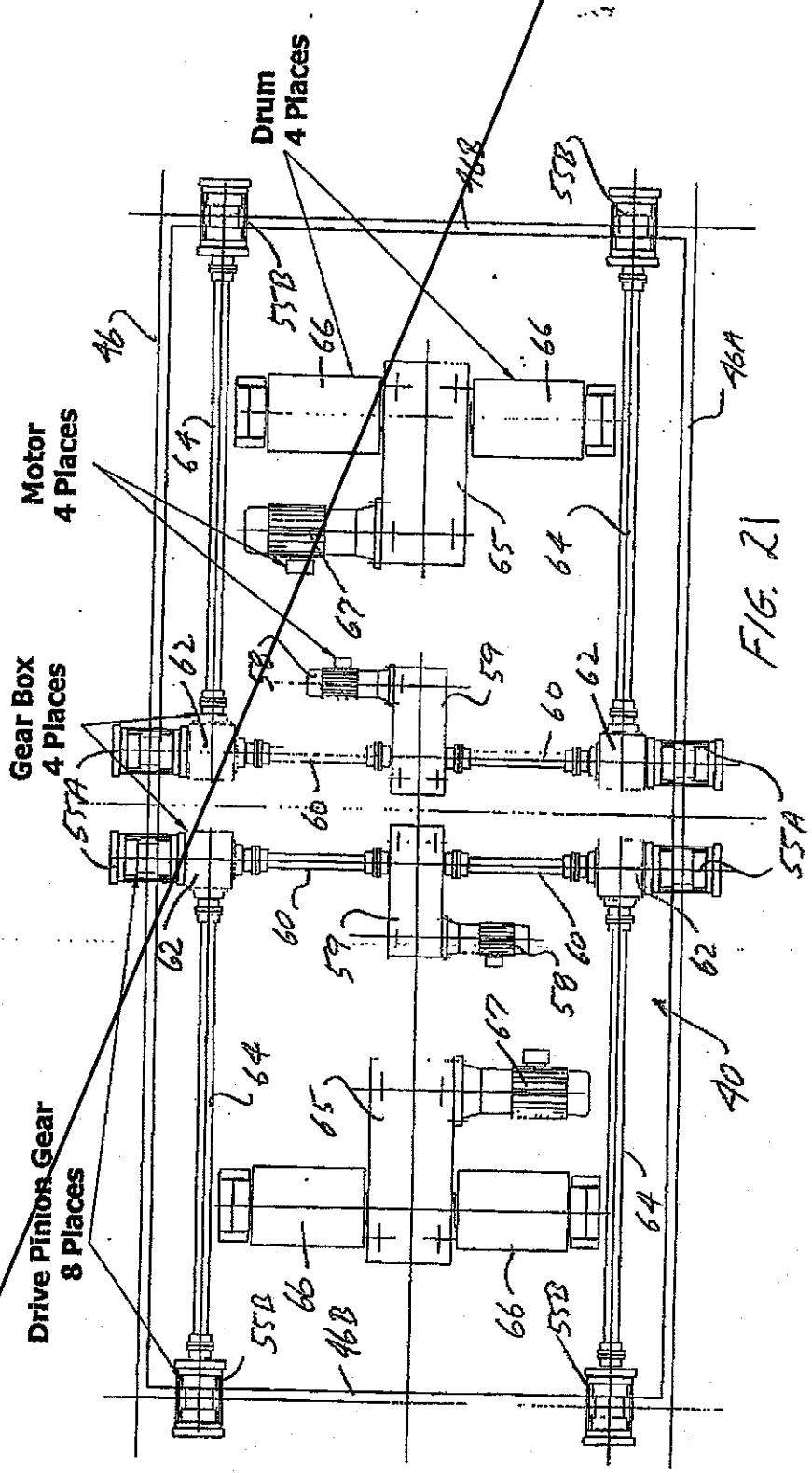
Drum
4 Places
Motor
4 Places
Gear Box
4 Places
Drive Pinion Gear
8 Places

FIG. 21

FIG. 22

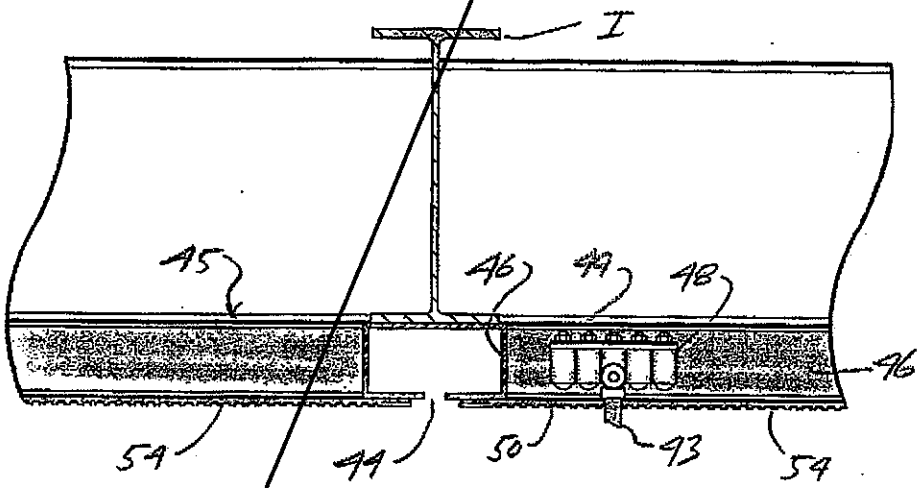

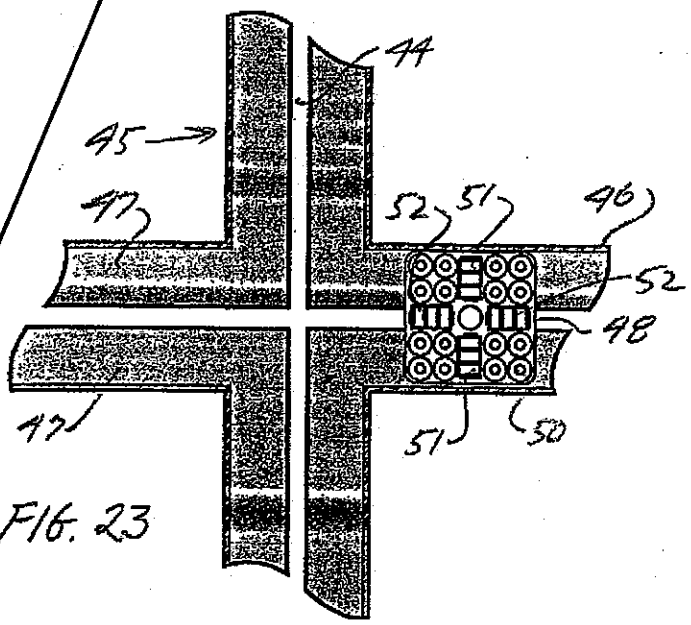

FIG. 23

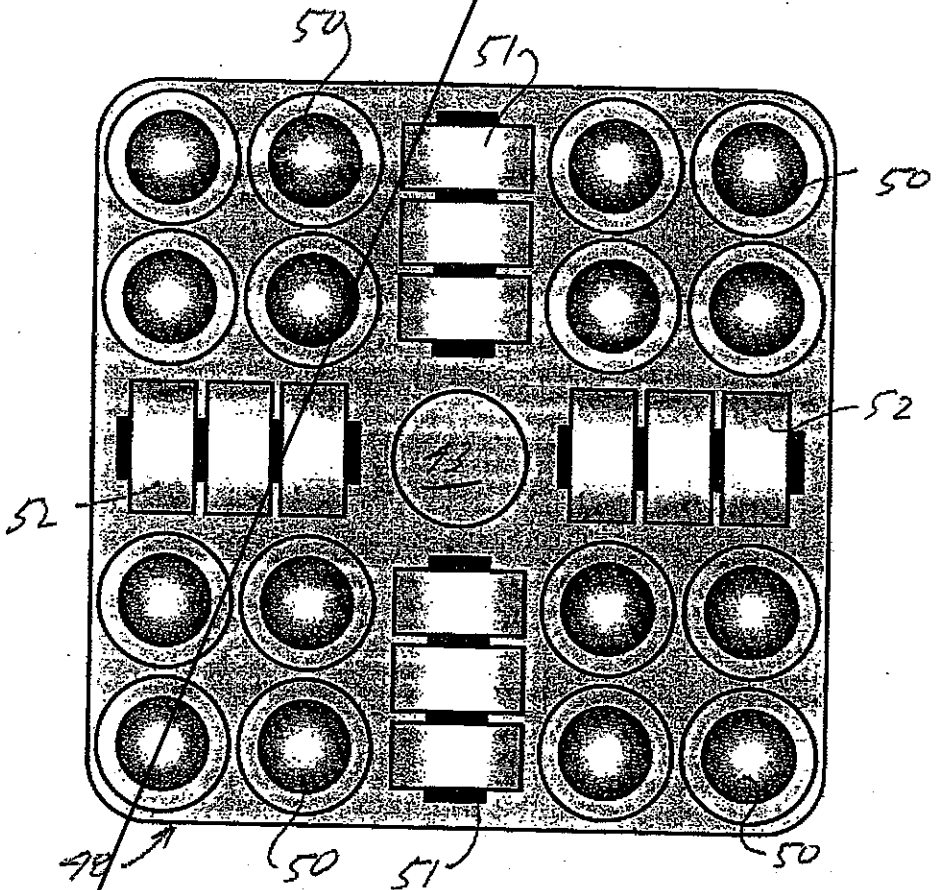

FIG. 24

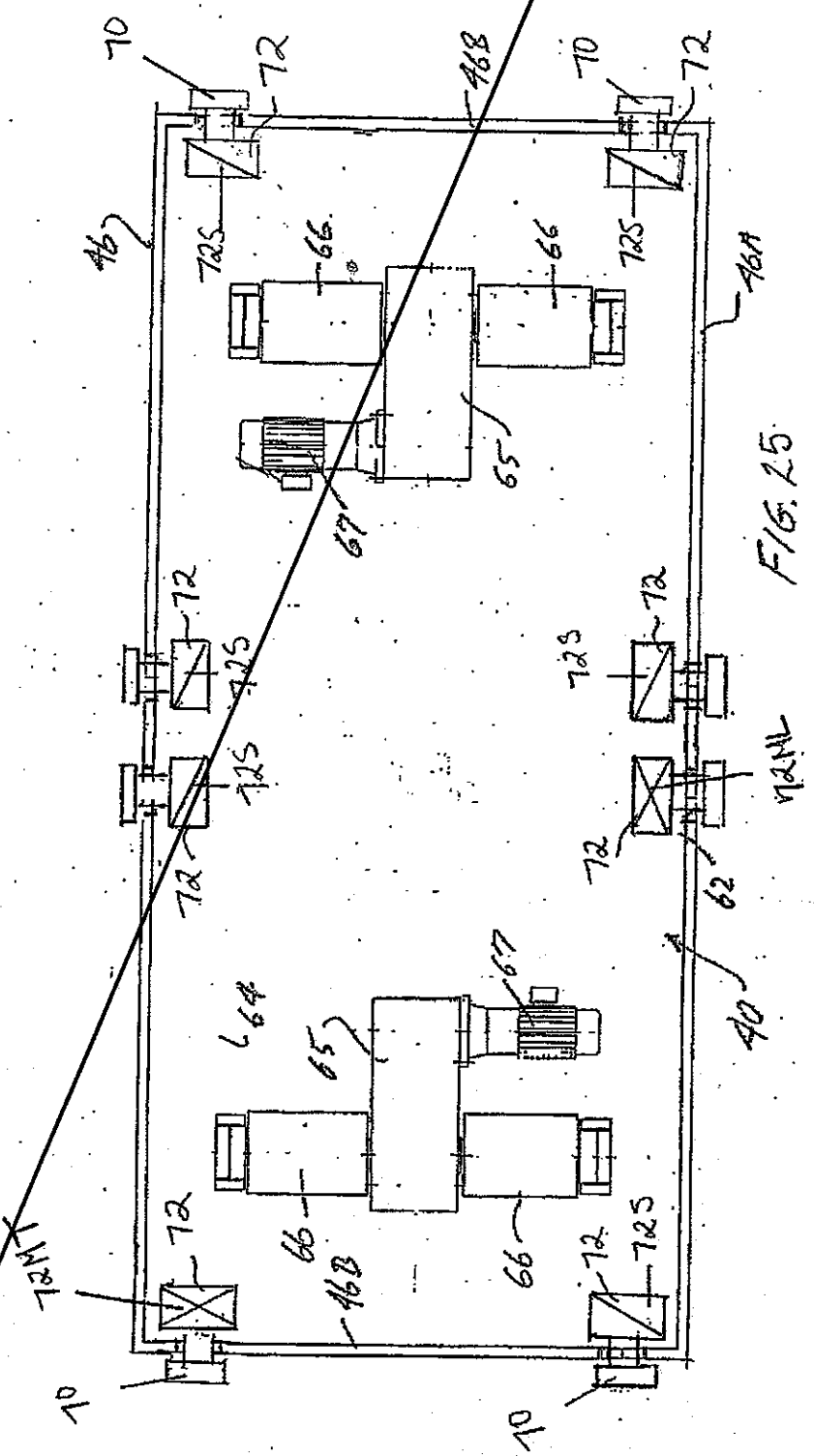

FIG. 25

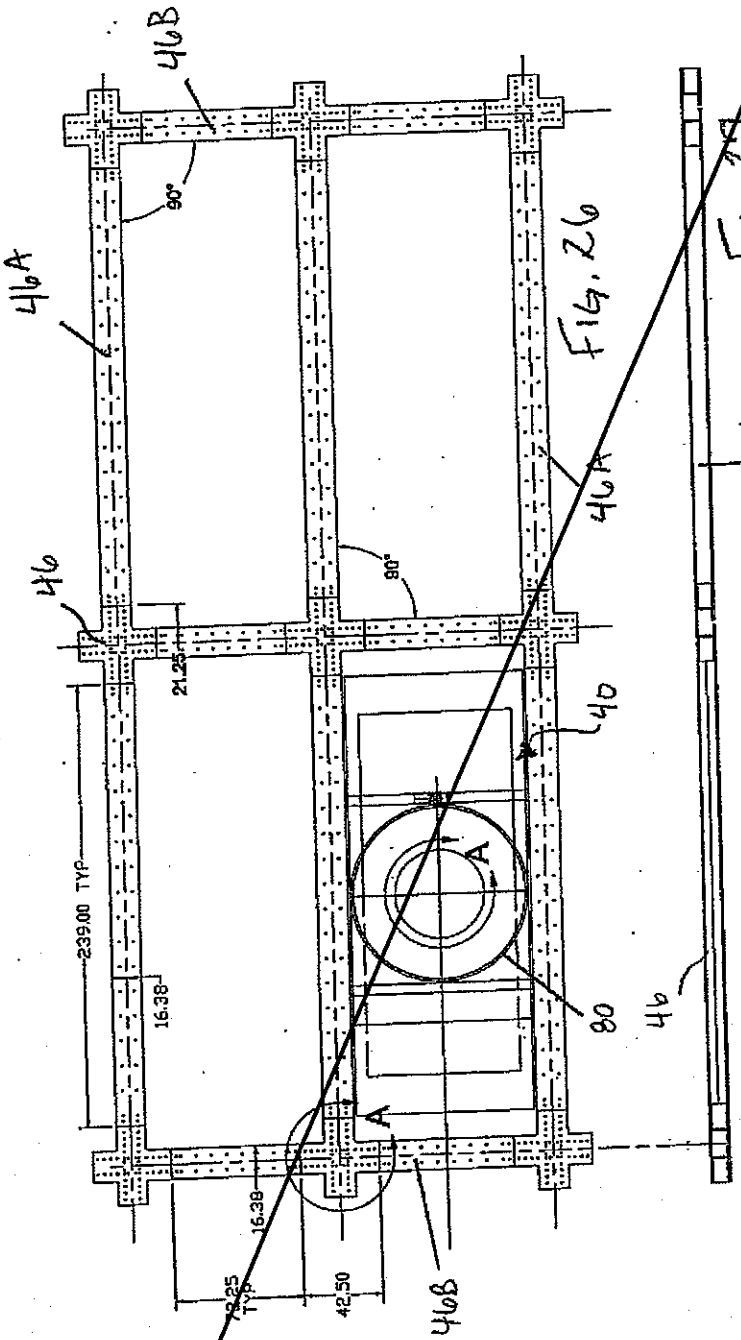

Fig. 26

Fig. 27

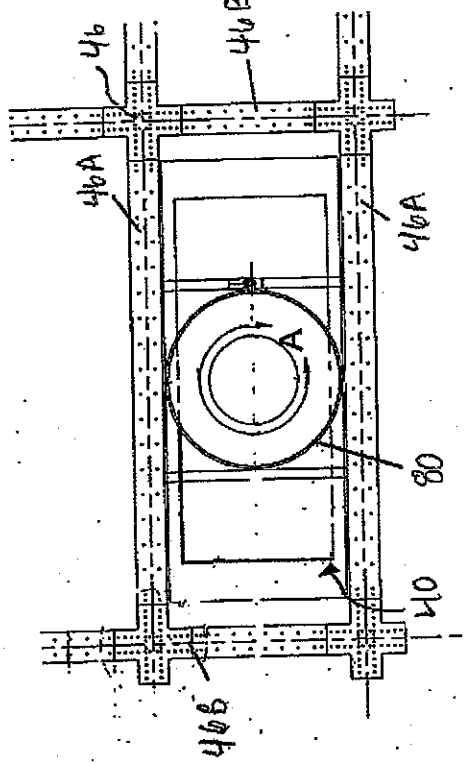

Fig. 28

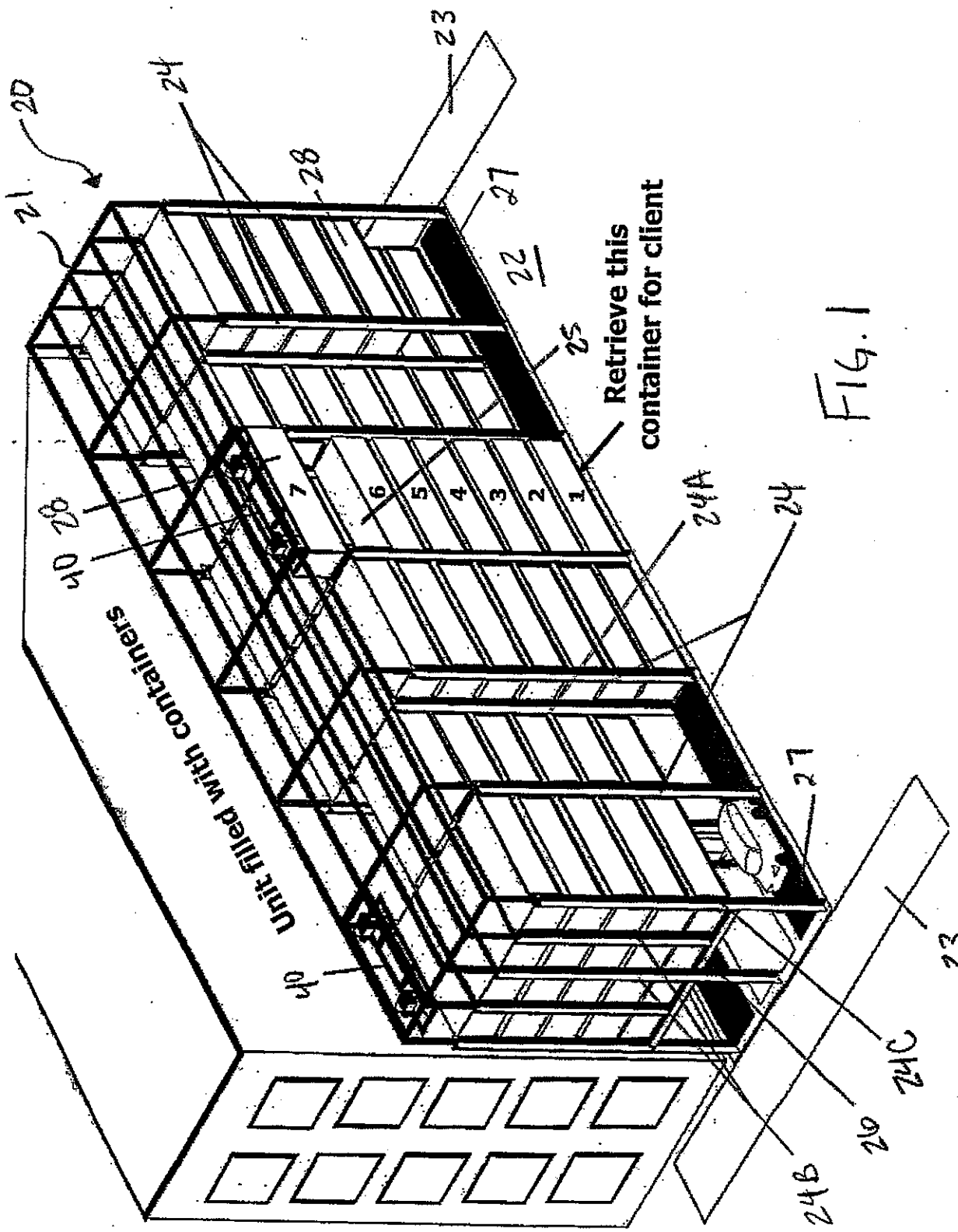
20
21
24
23
28
27
22
25
Retrieve this container for client
Unit filled with containers
40
28
7
6
5
4
3
2
1
24A
24
27
24B
29
24C
23

FIG. 1

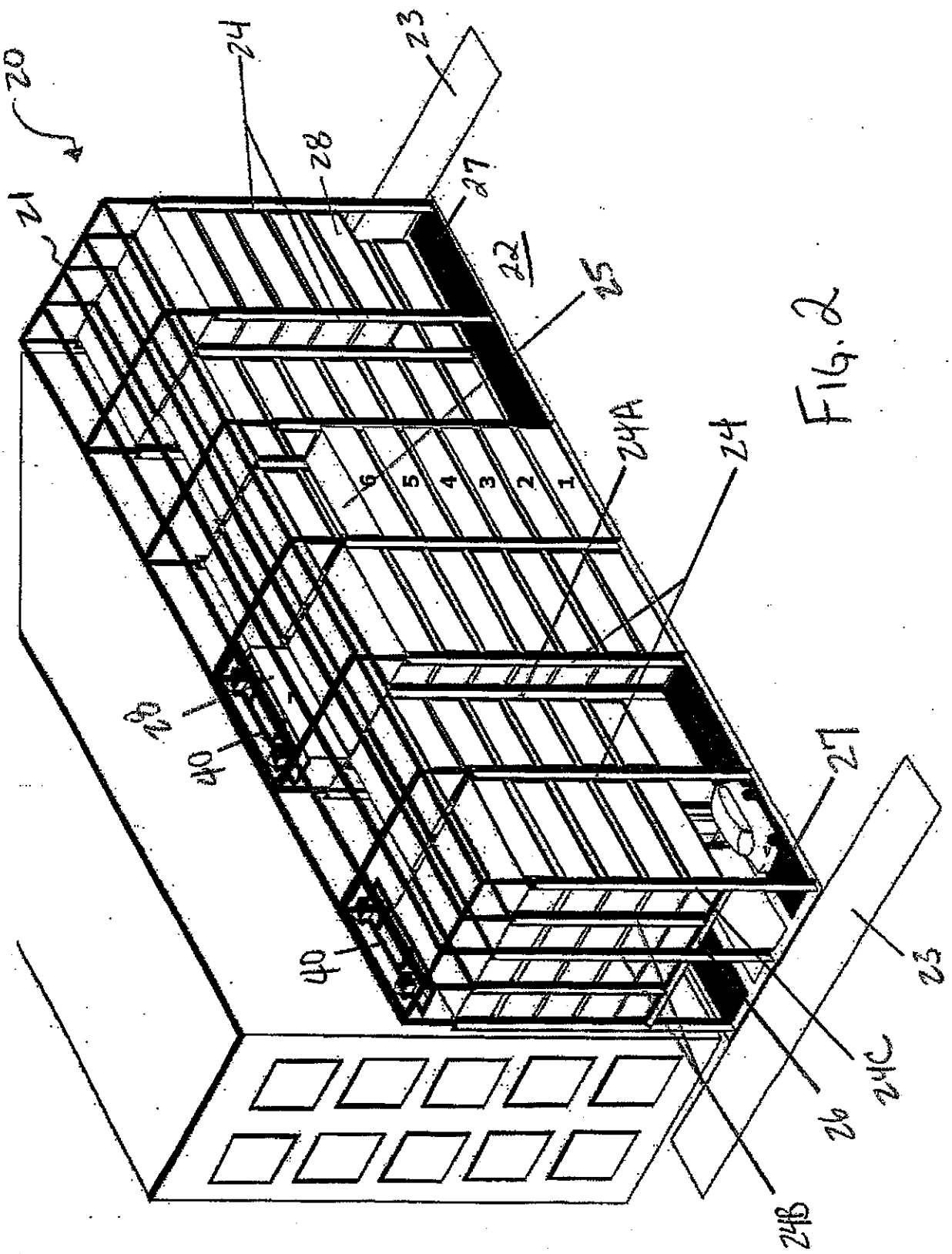

Fig. 2

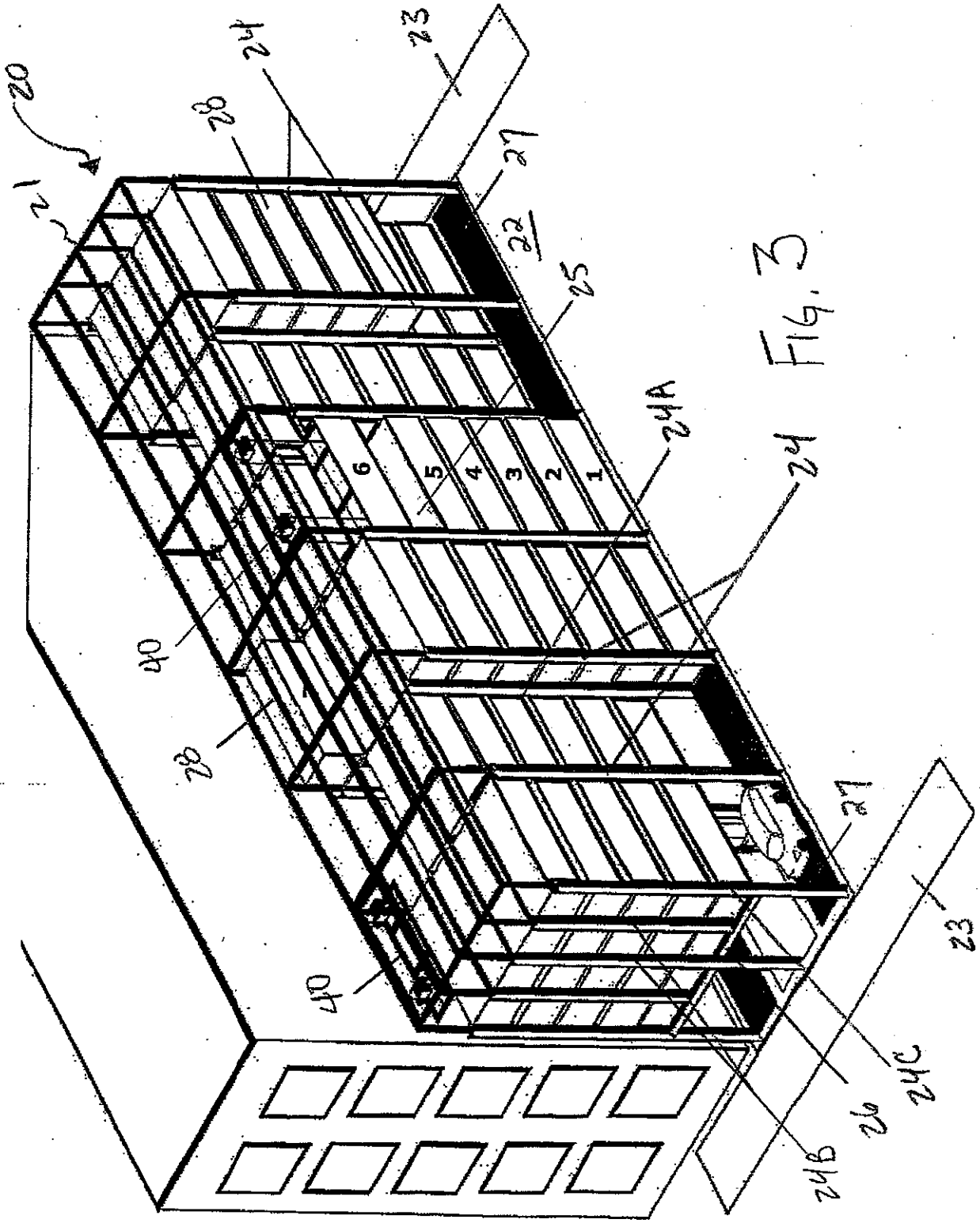

Fig. 3

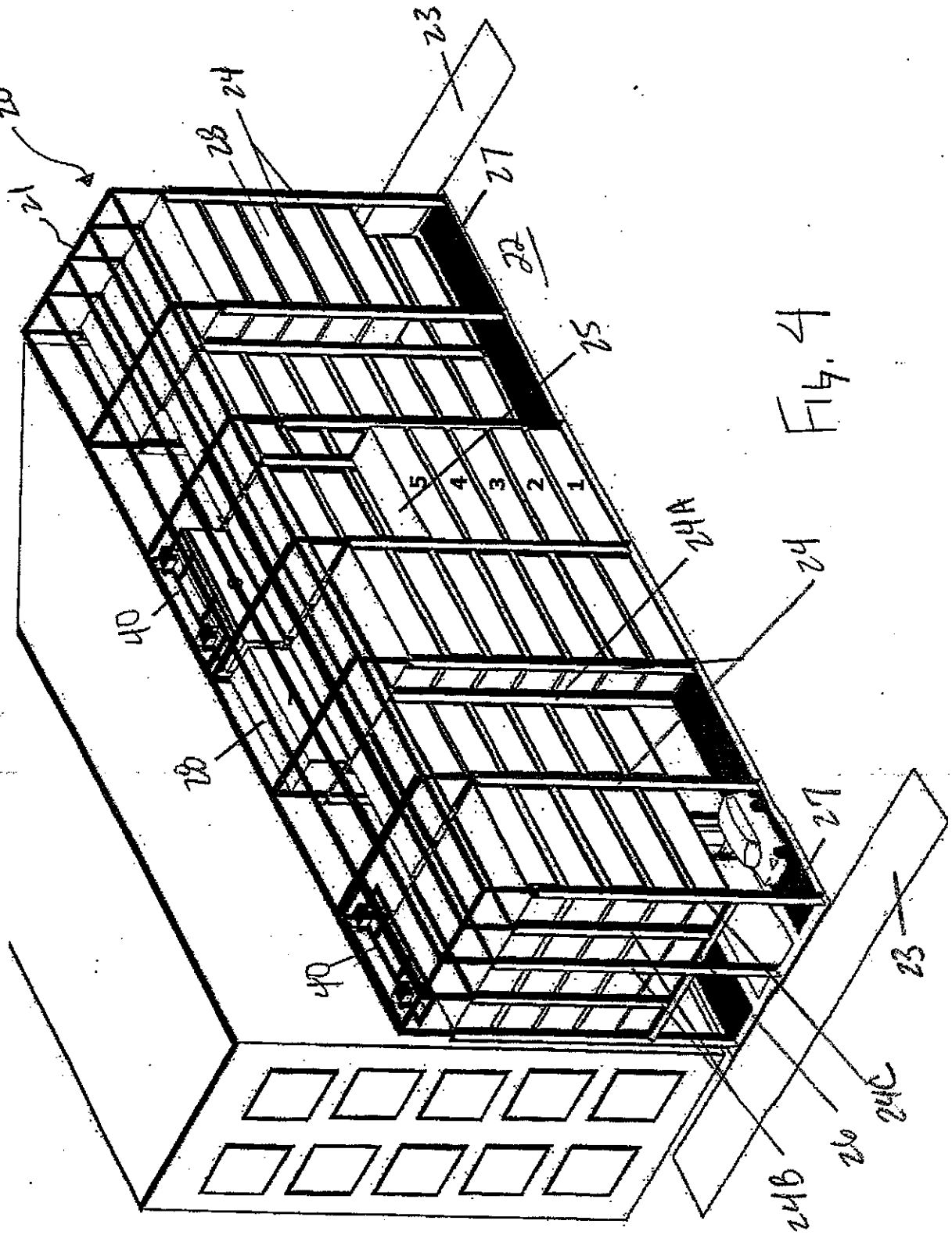

Fig. 4

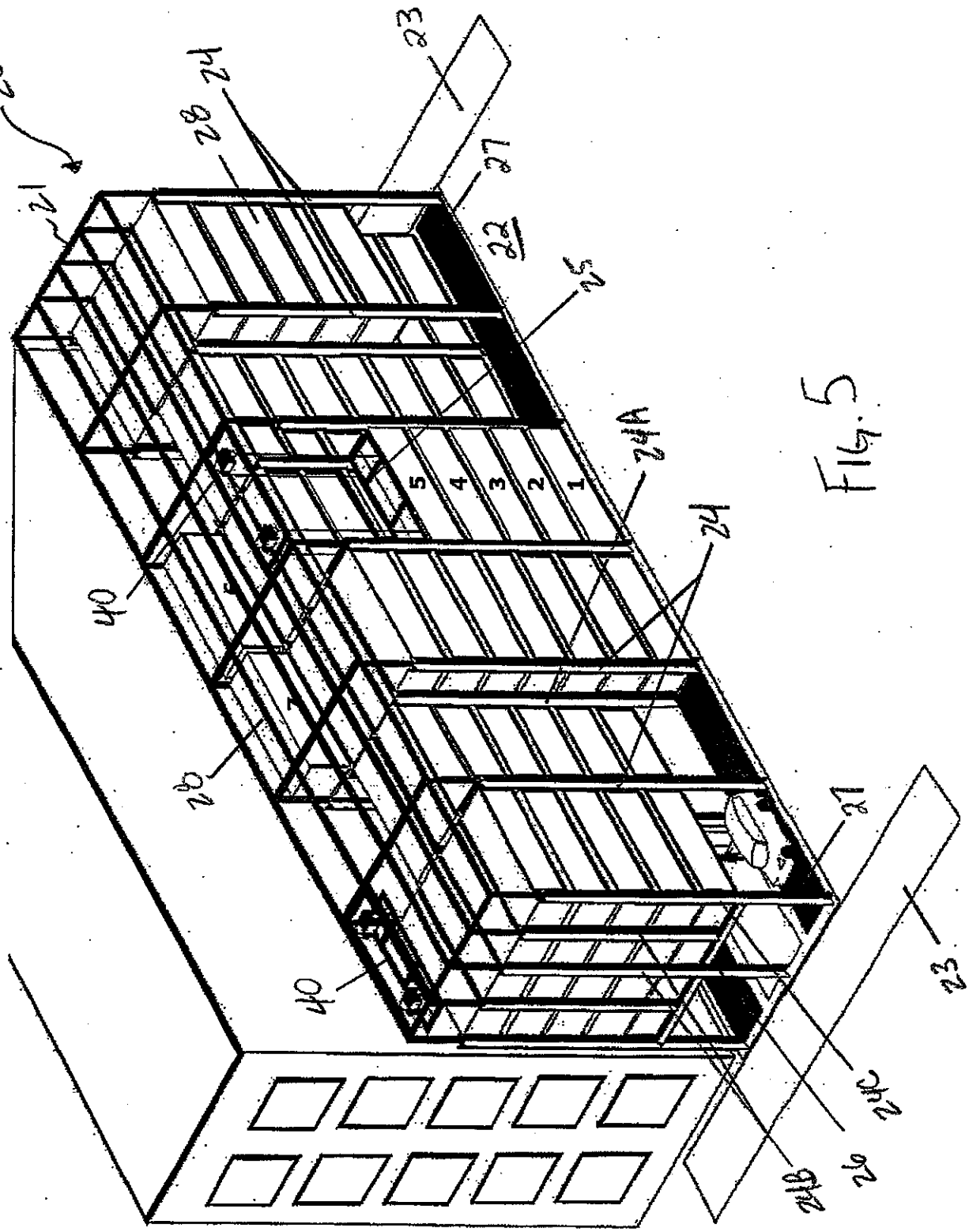

FIG. 5

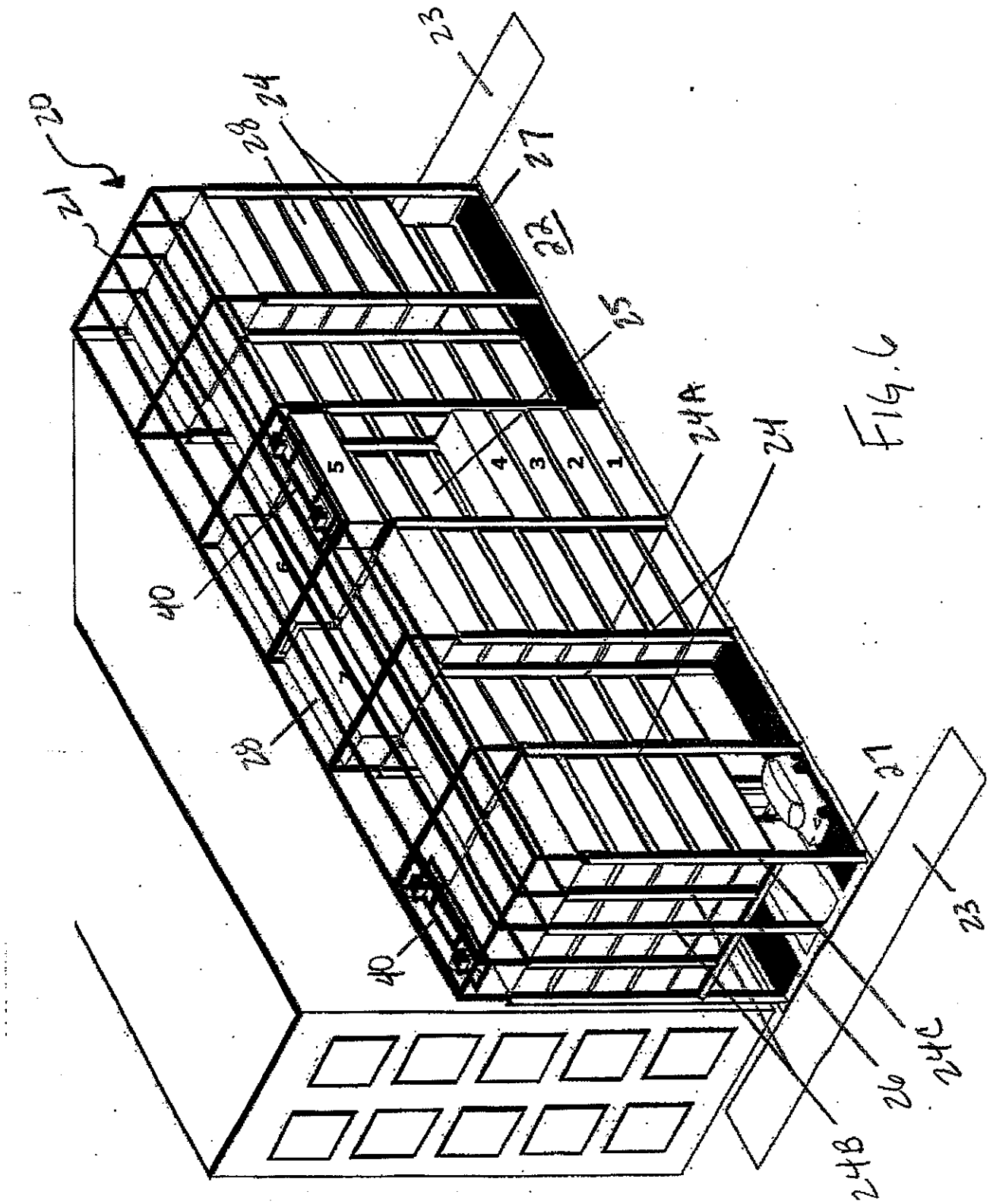

FIG. 6

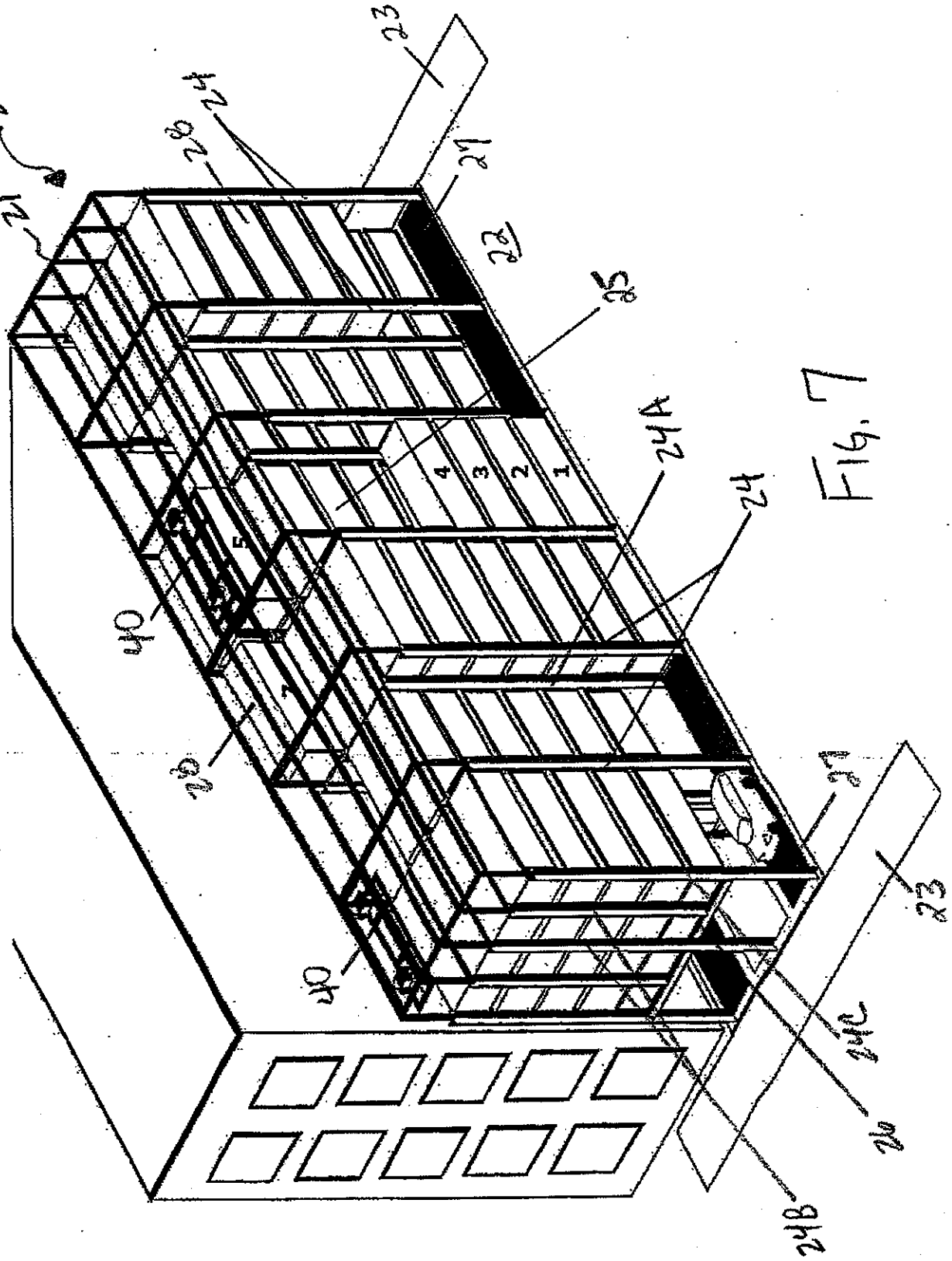

Fig. 7

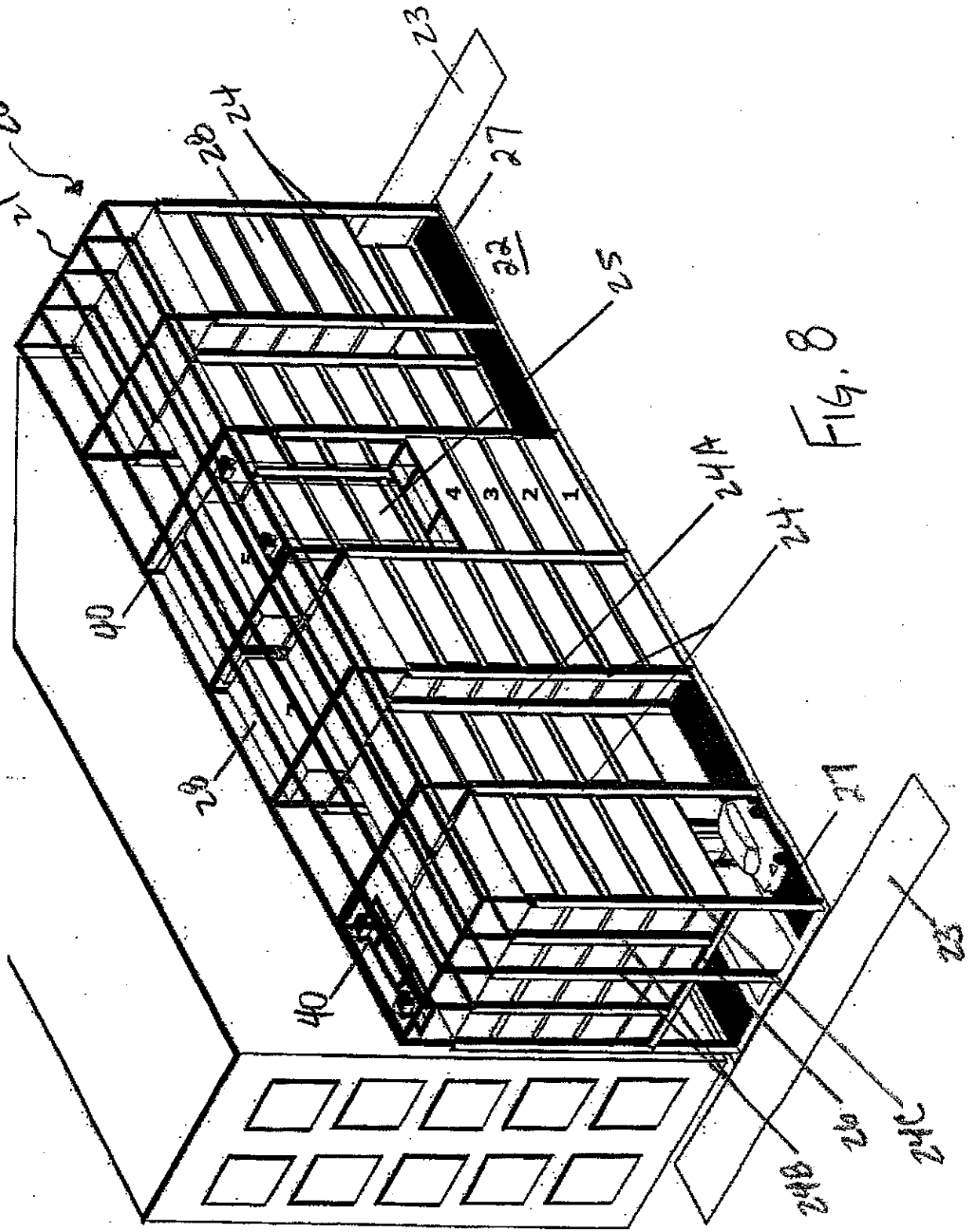

Fig. 8

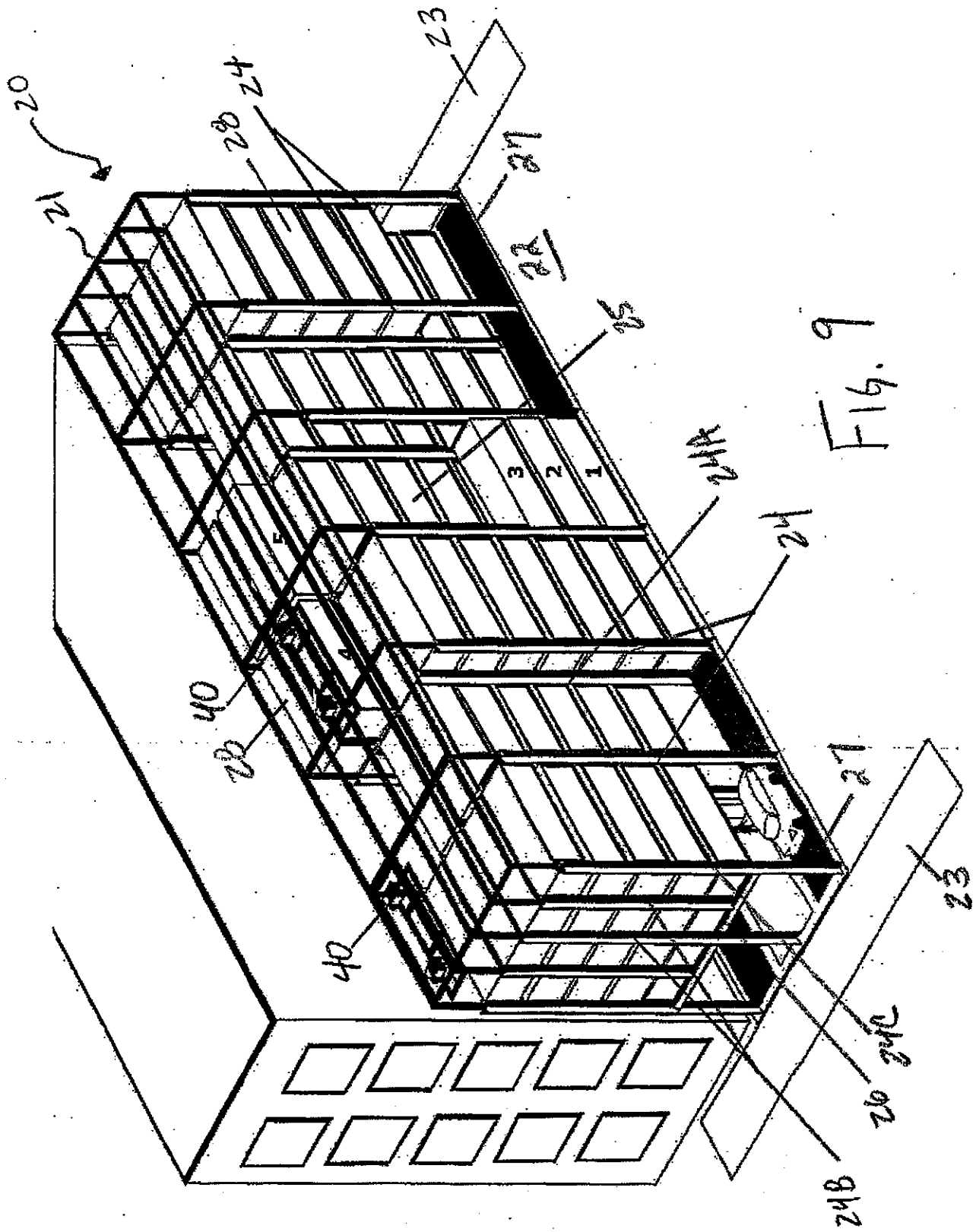

Fig. 9

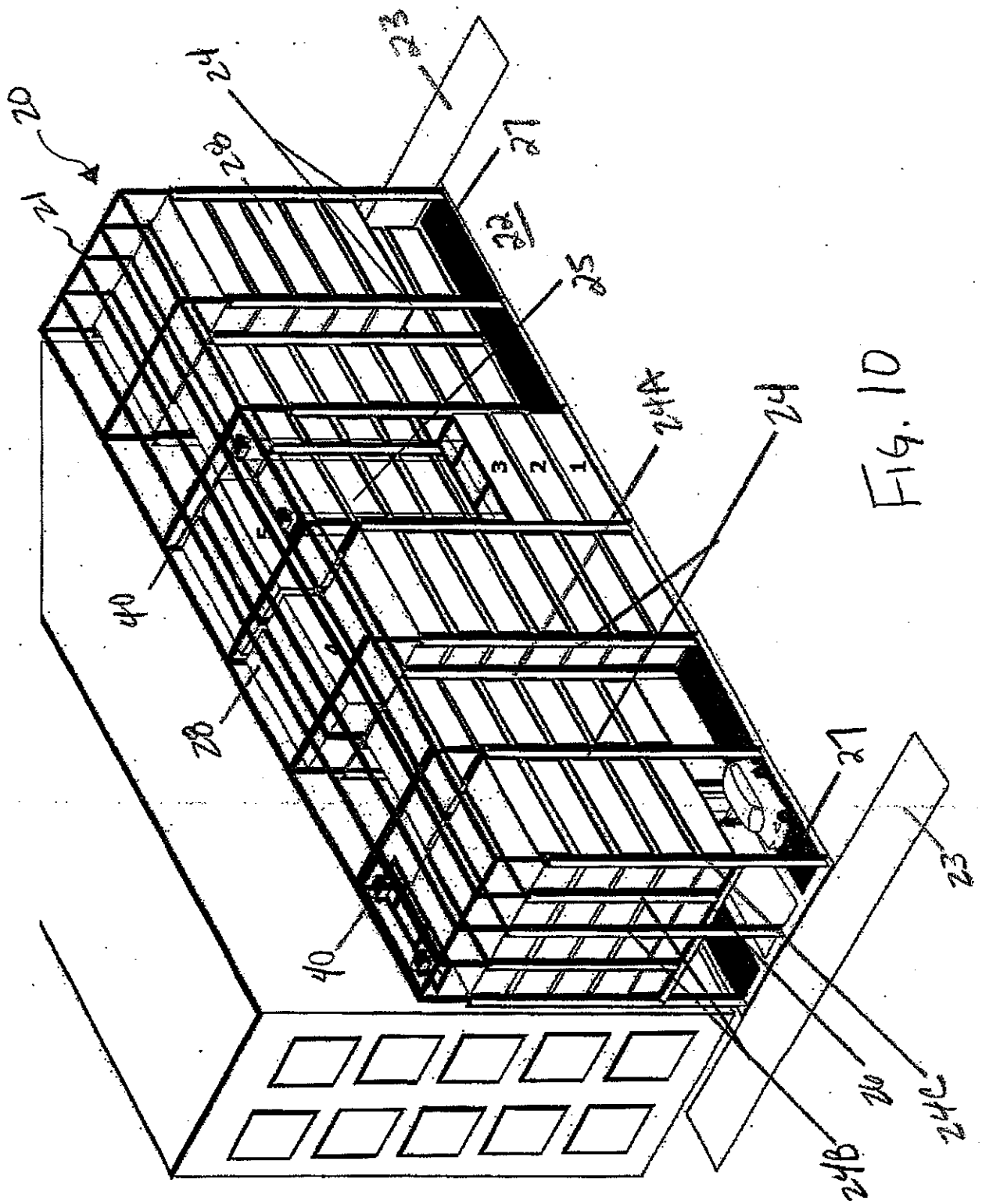

Fig. 10

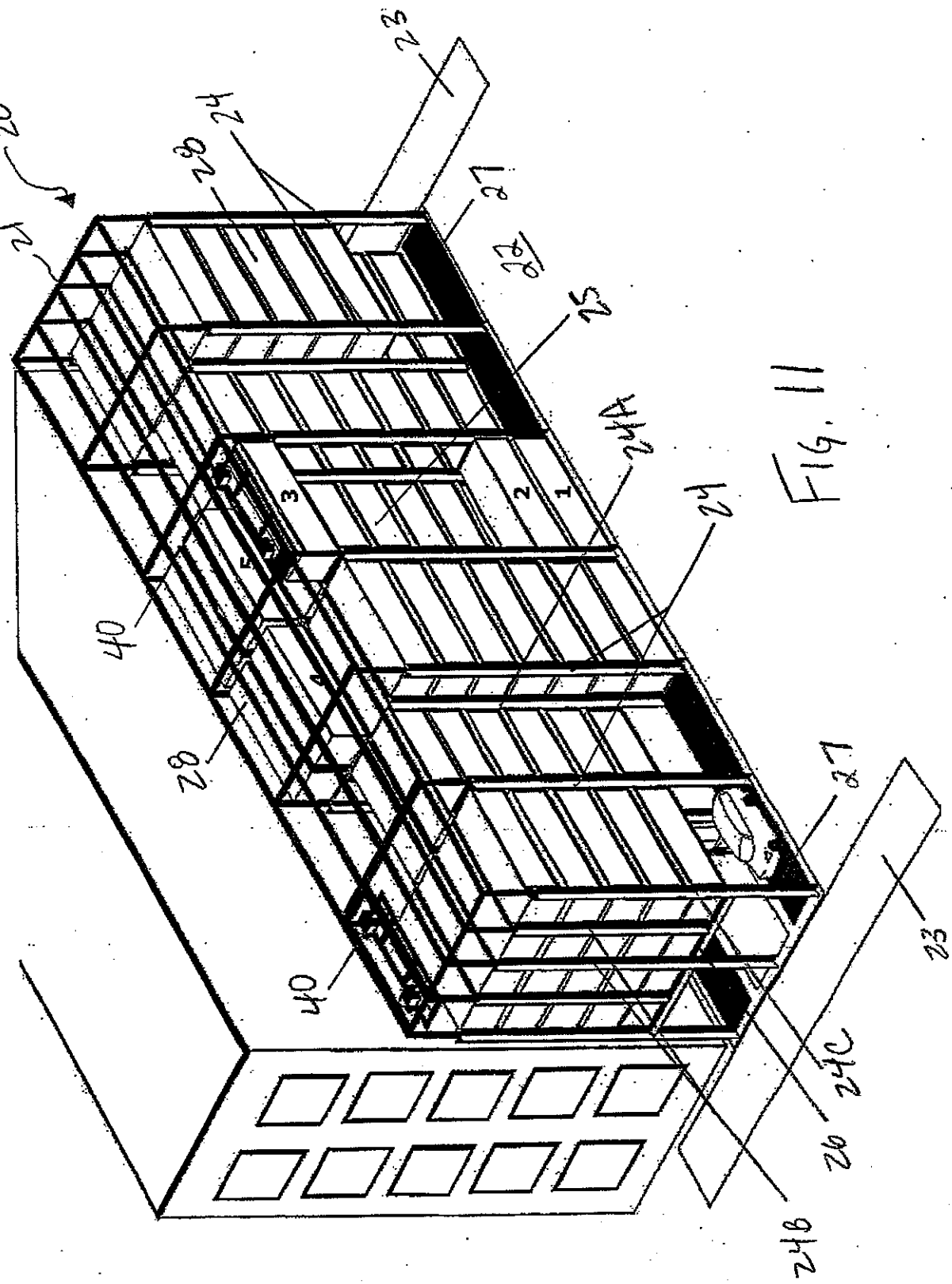

Fig. 11

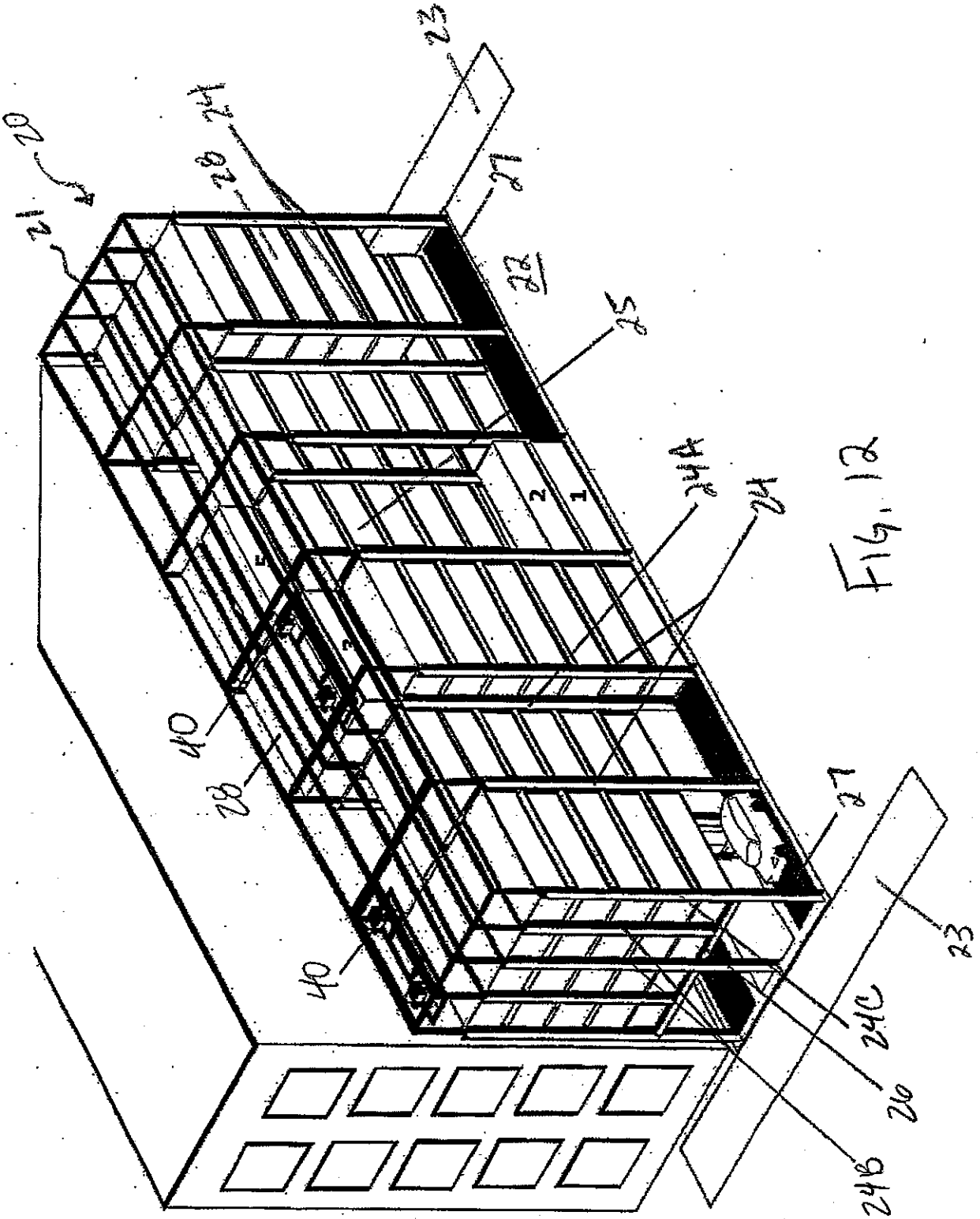

Fig. 12

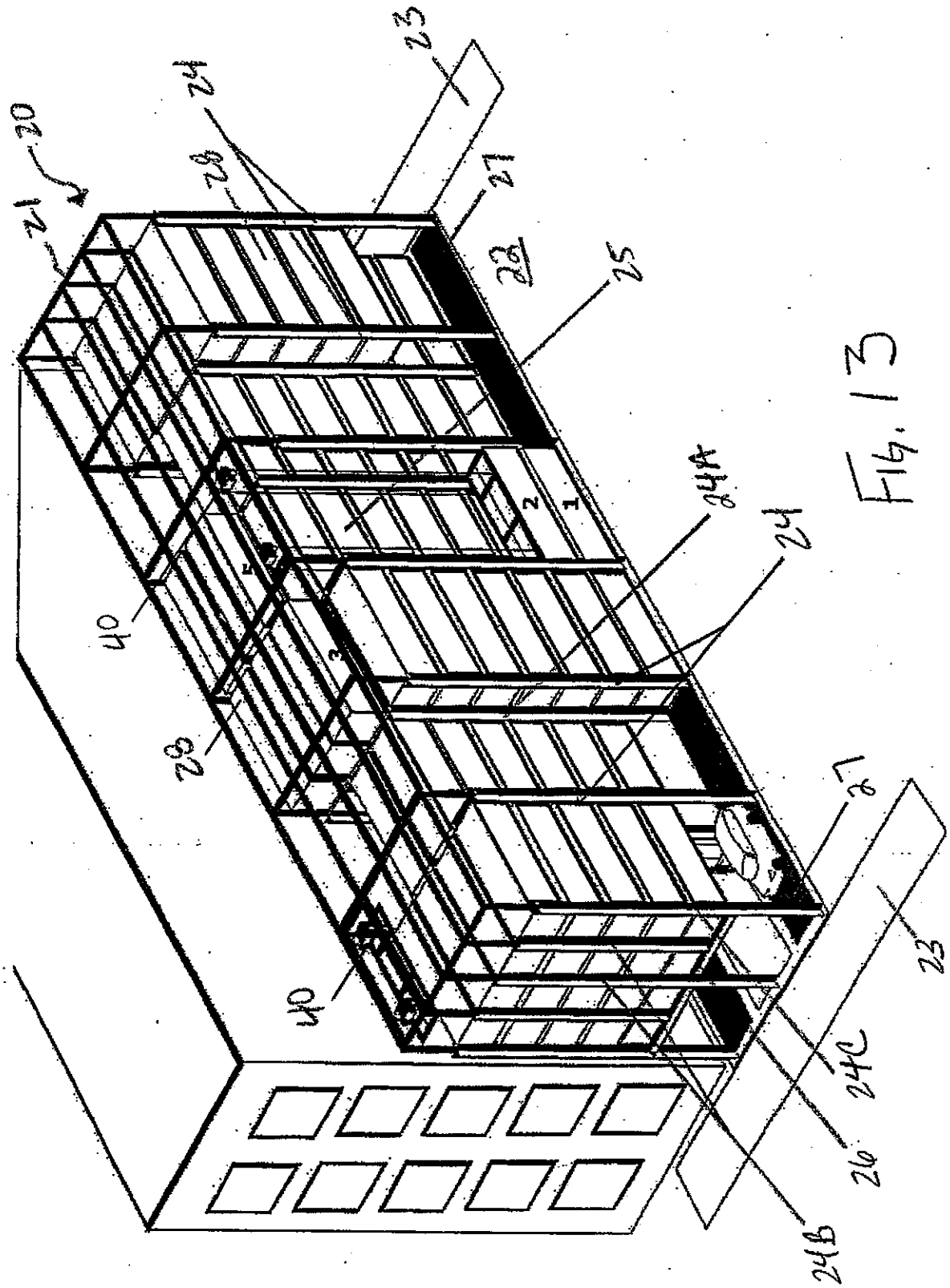

Fig. 13

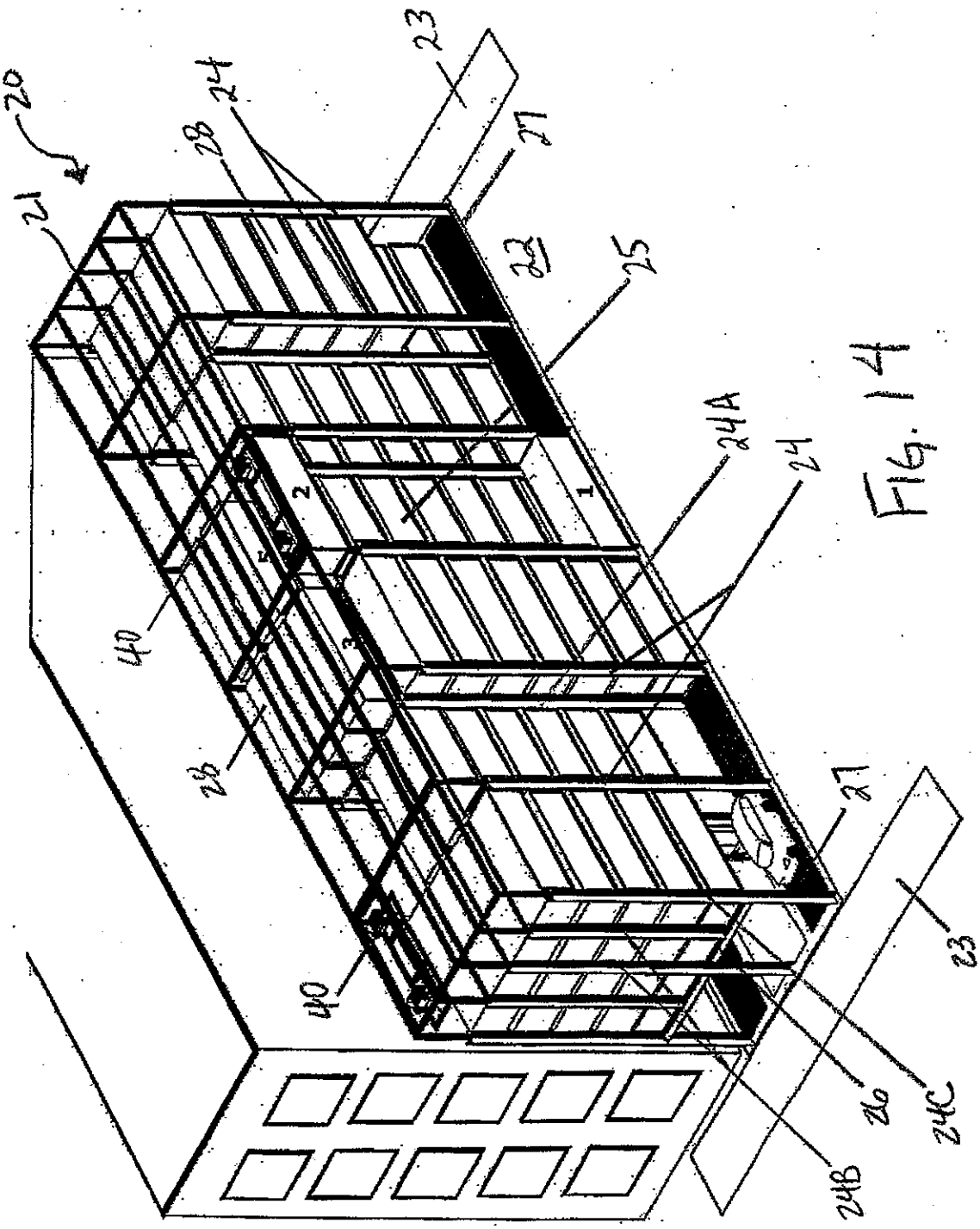

Fig. 14

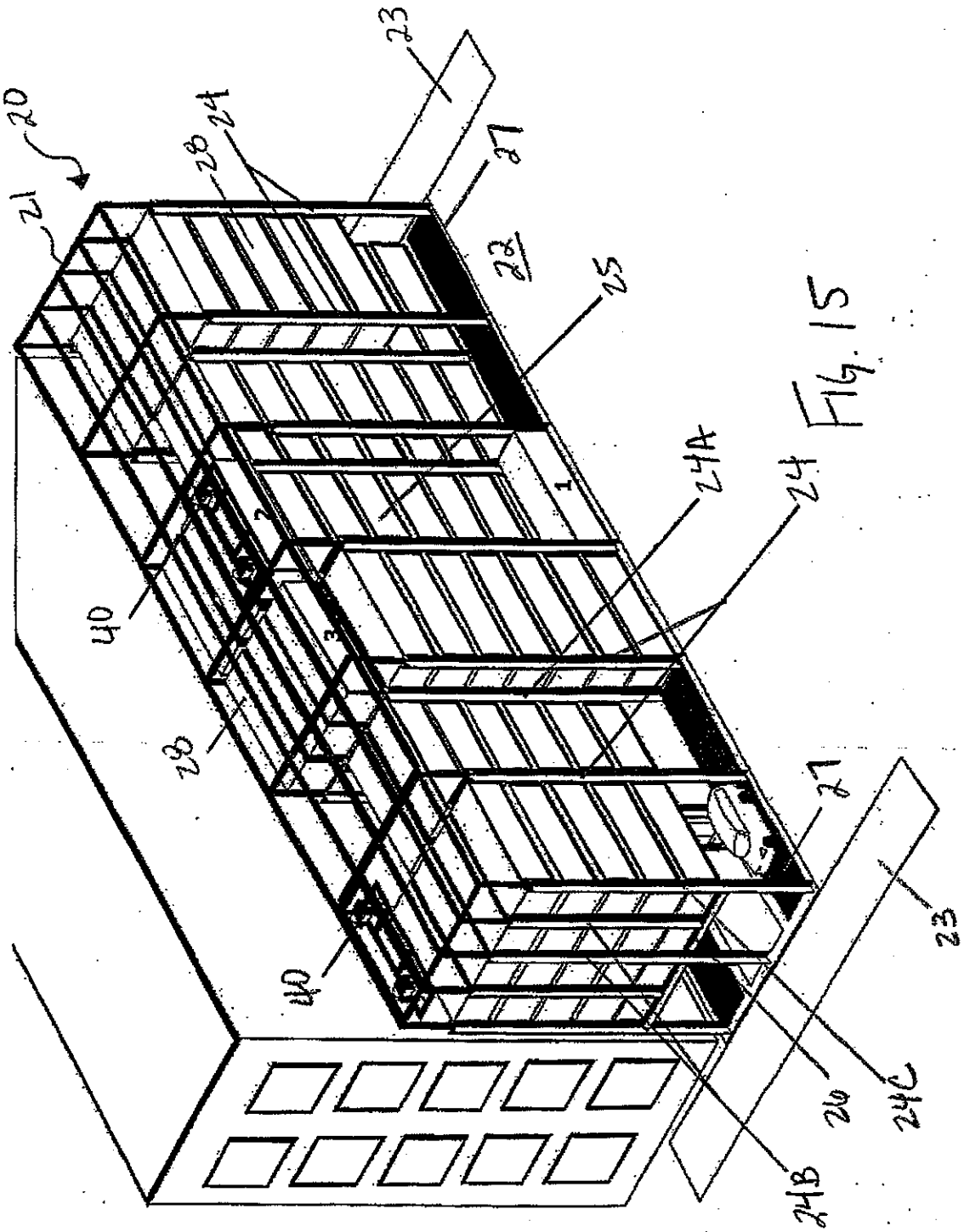

FIG. 15

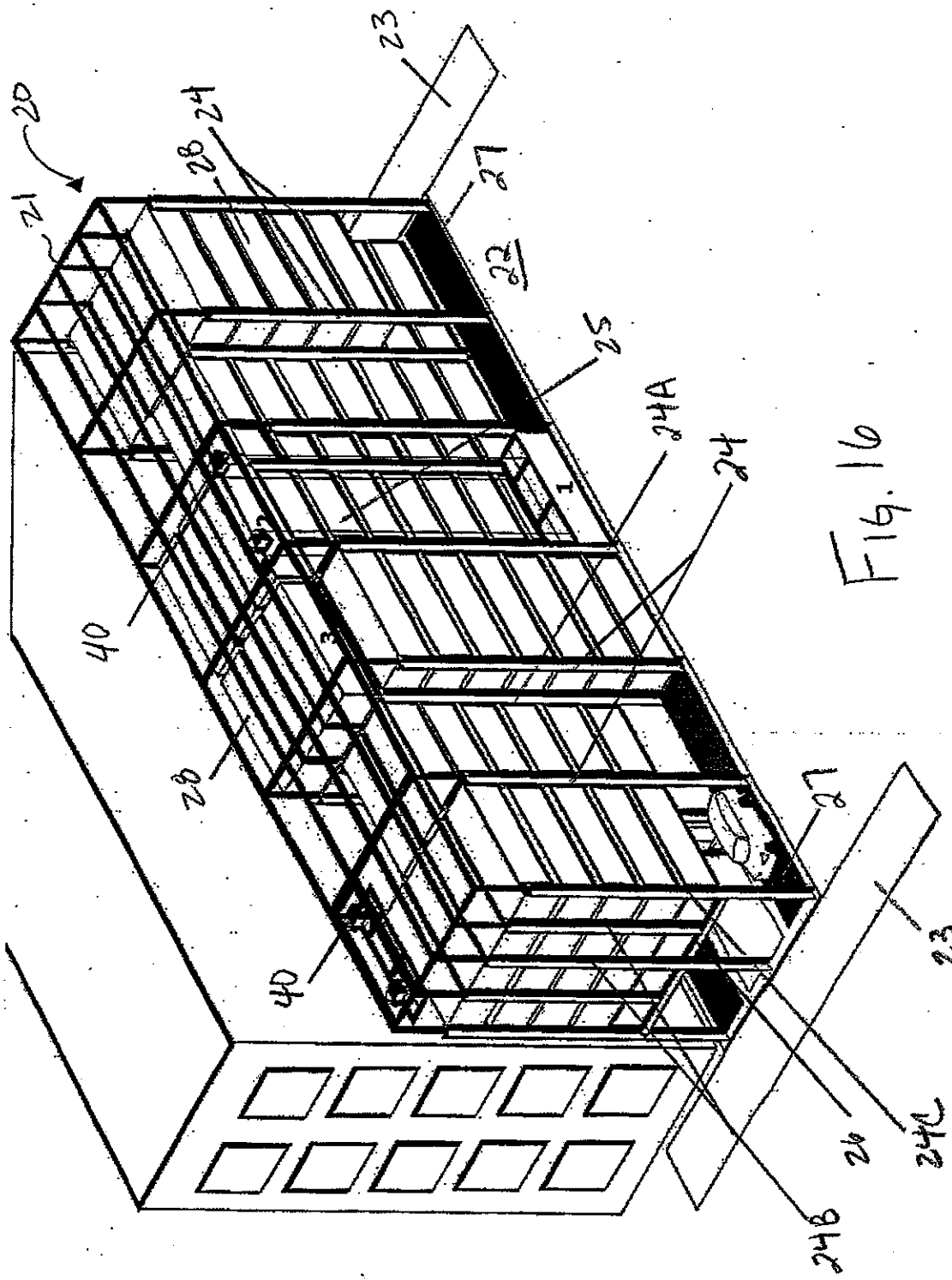

Fig. 16

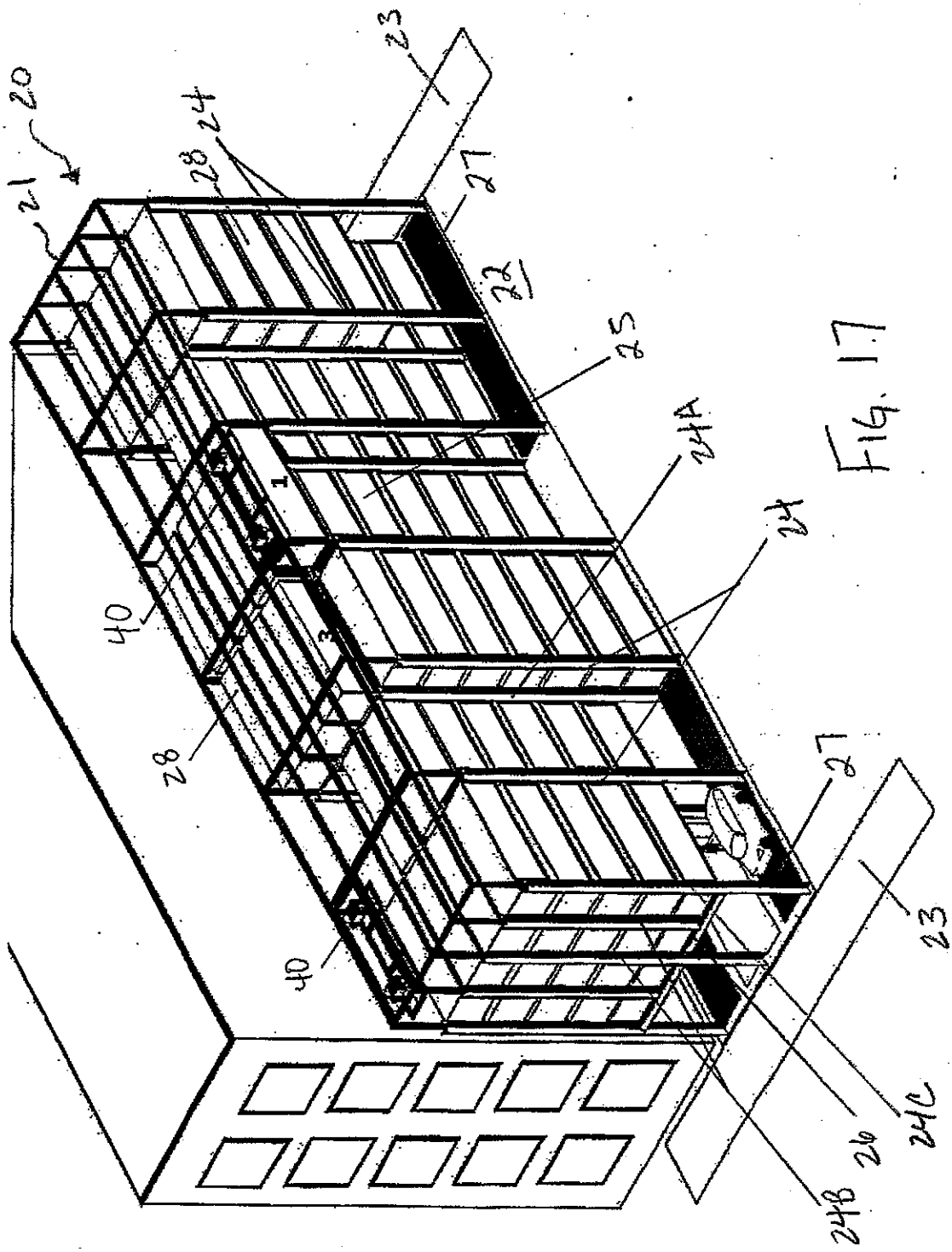

FIG. 17

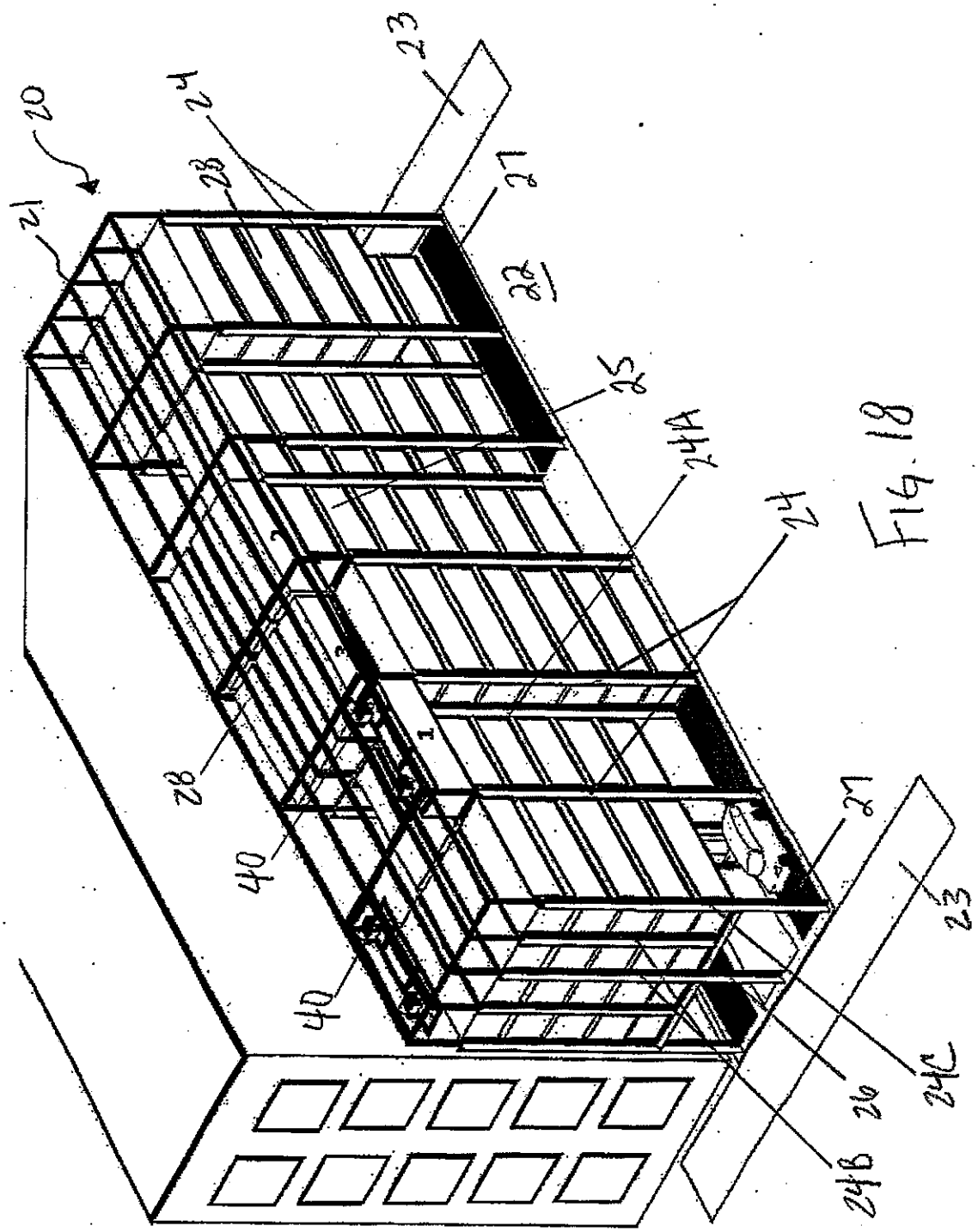

Fig. 18

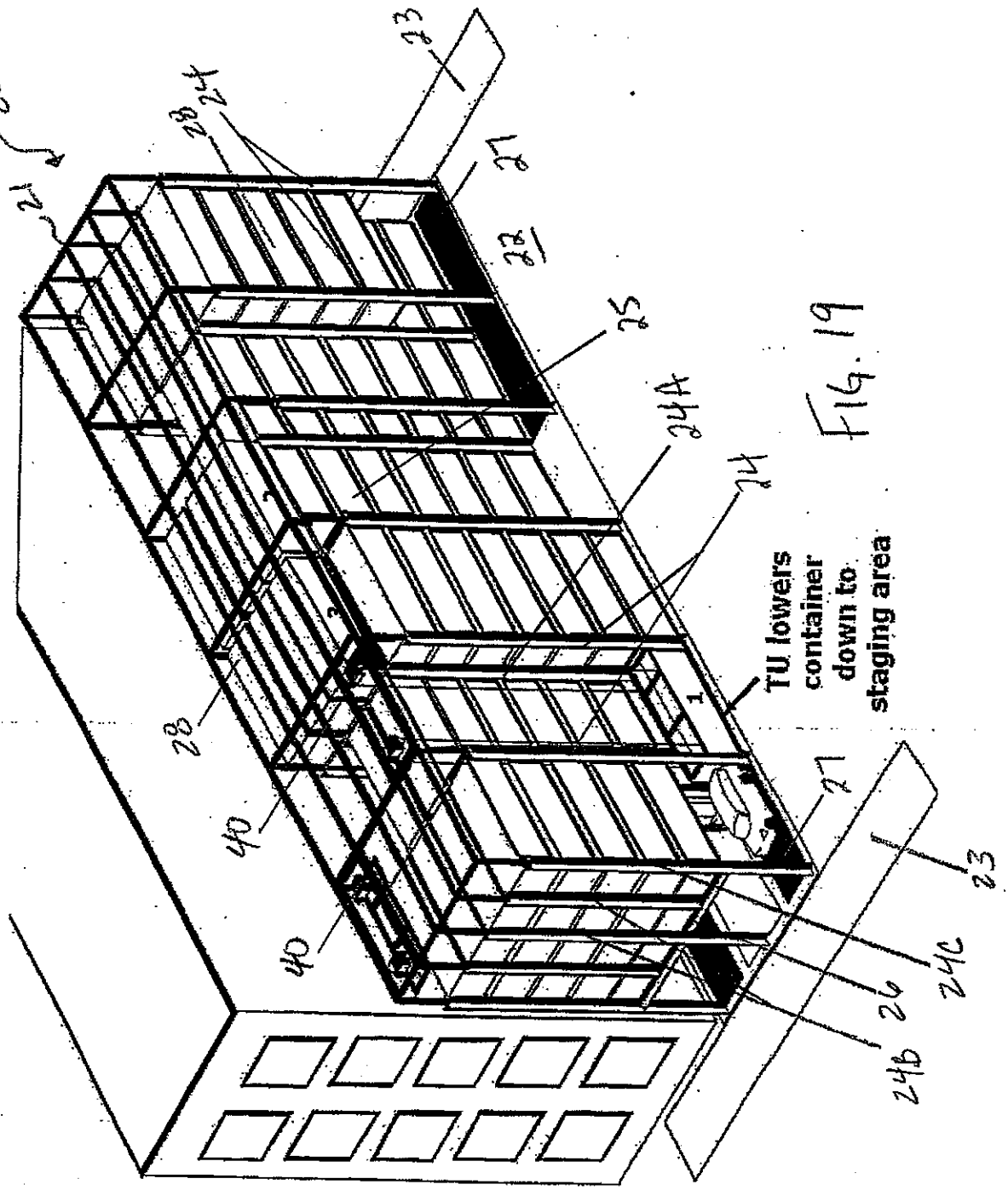
20
21
28
24
23
27
22
25
24a
24
TU lowers container down to staging area
28
40
40
27
23
24c
26
24b

Fig. 19

Transfer Unit

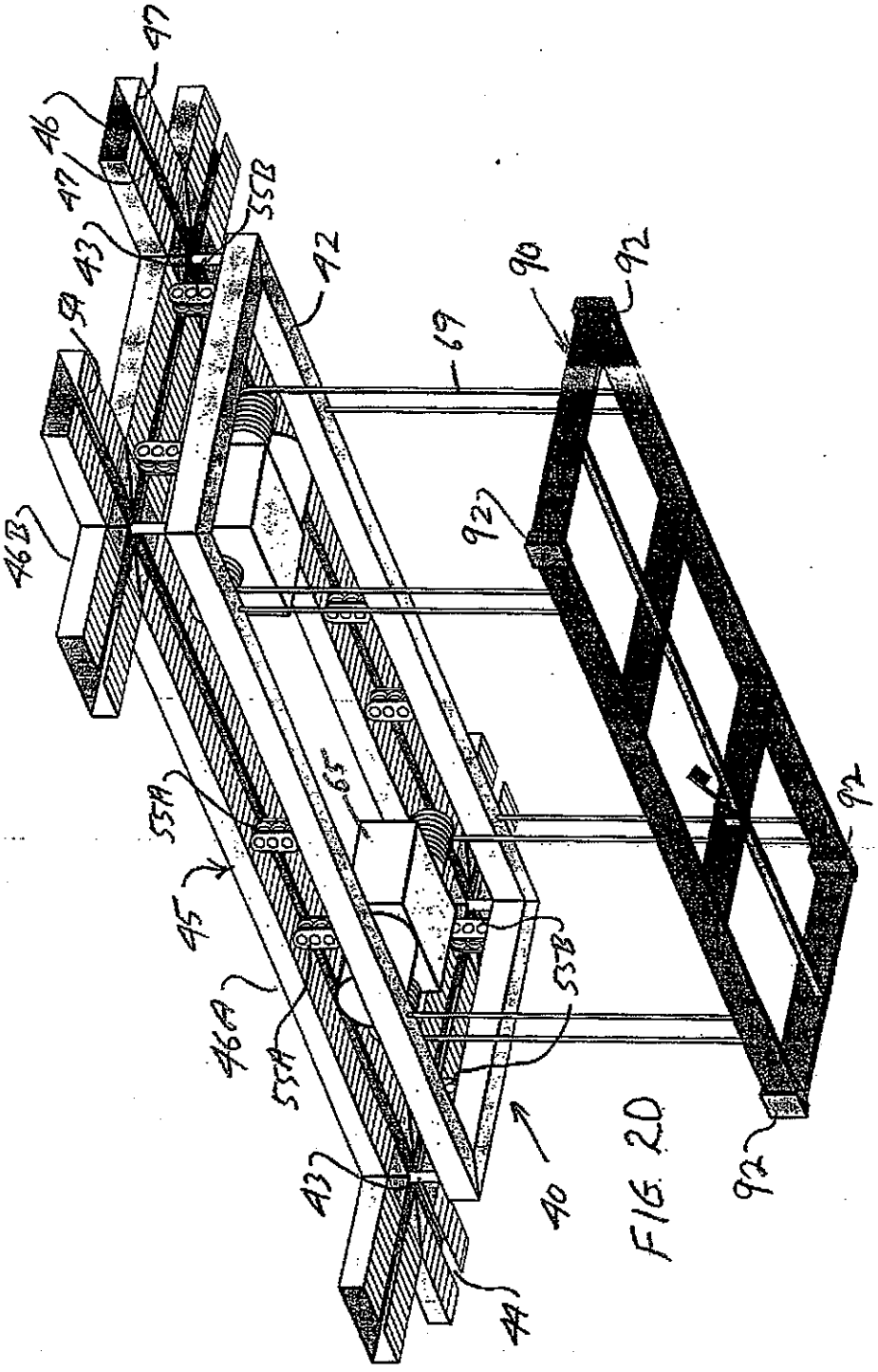

FIG. 20

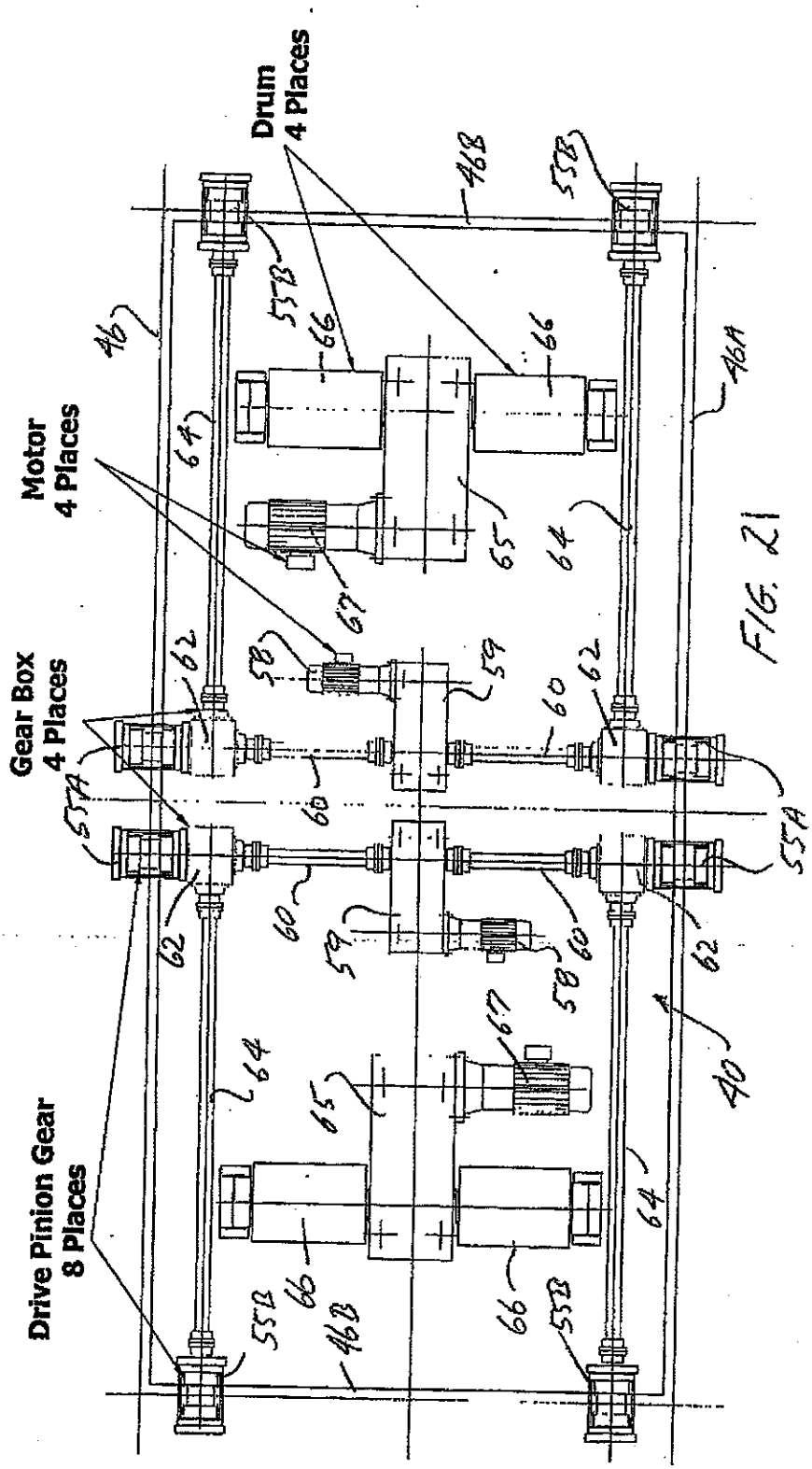
Drum
4 Places
Motor
4 Places
Gear Box
4 Places
Drive Pinion Gear
8 Places

FIG. 21

FIG. 22

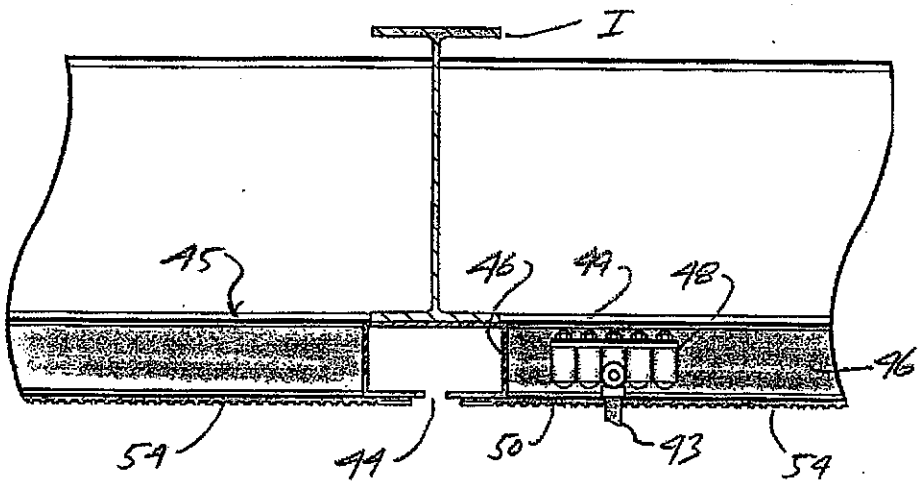

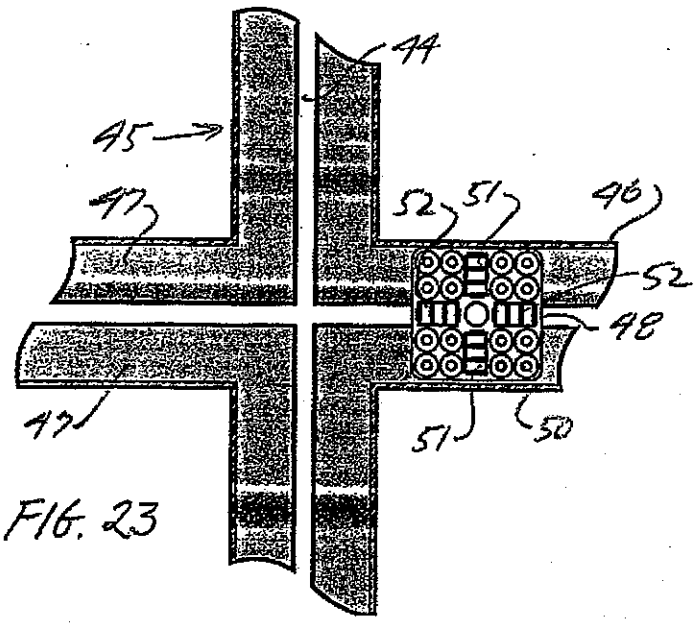

FIG. 23

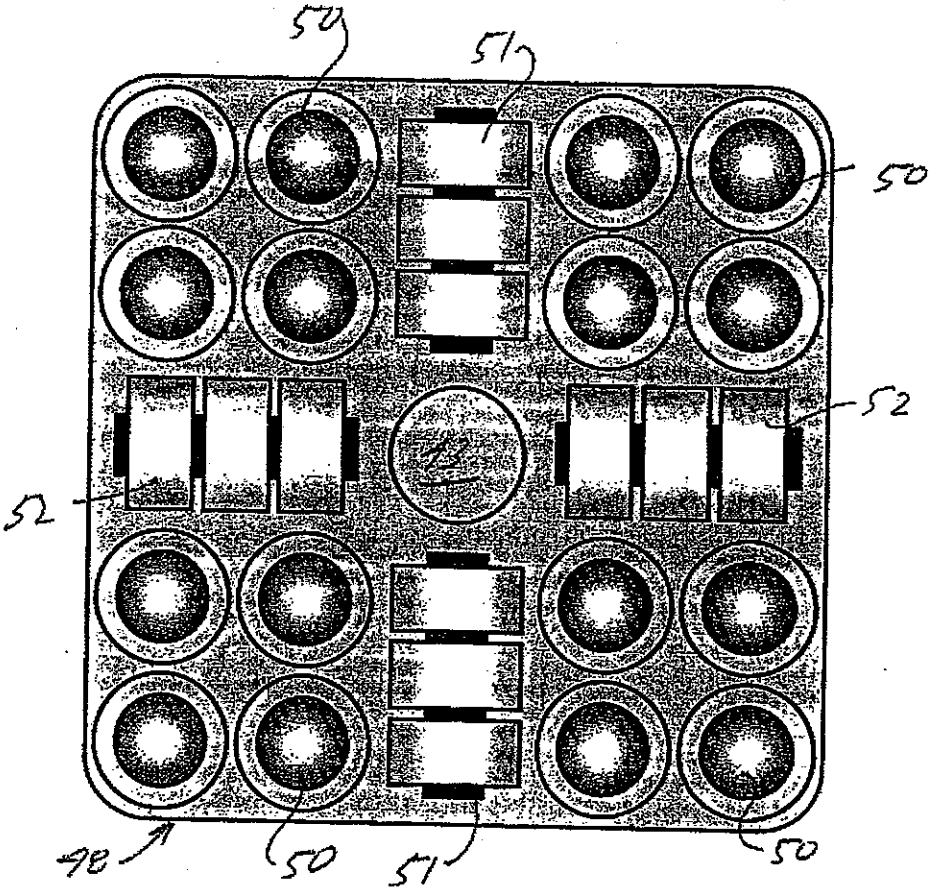

FIG. 24

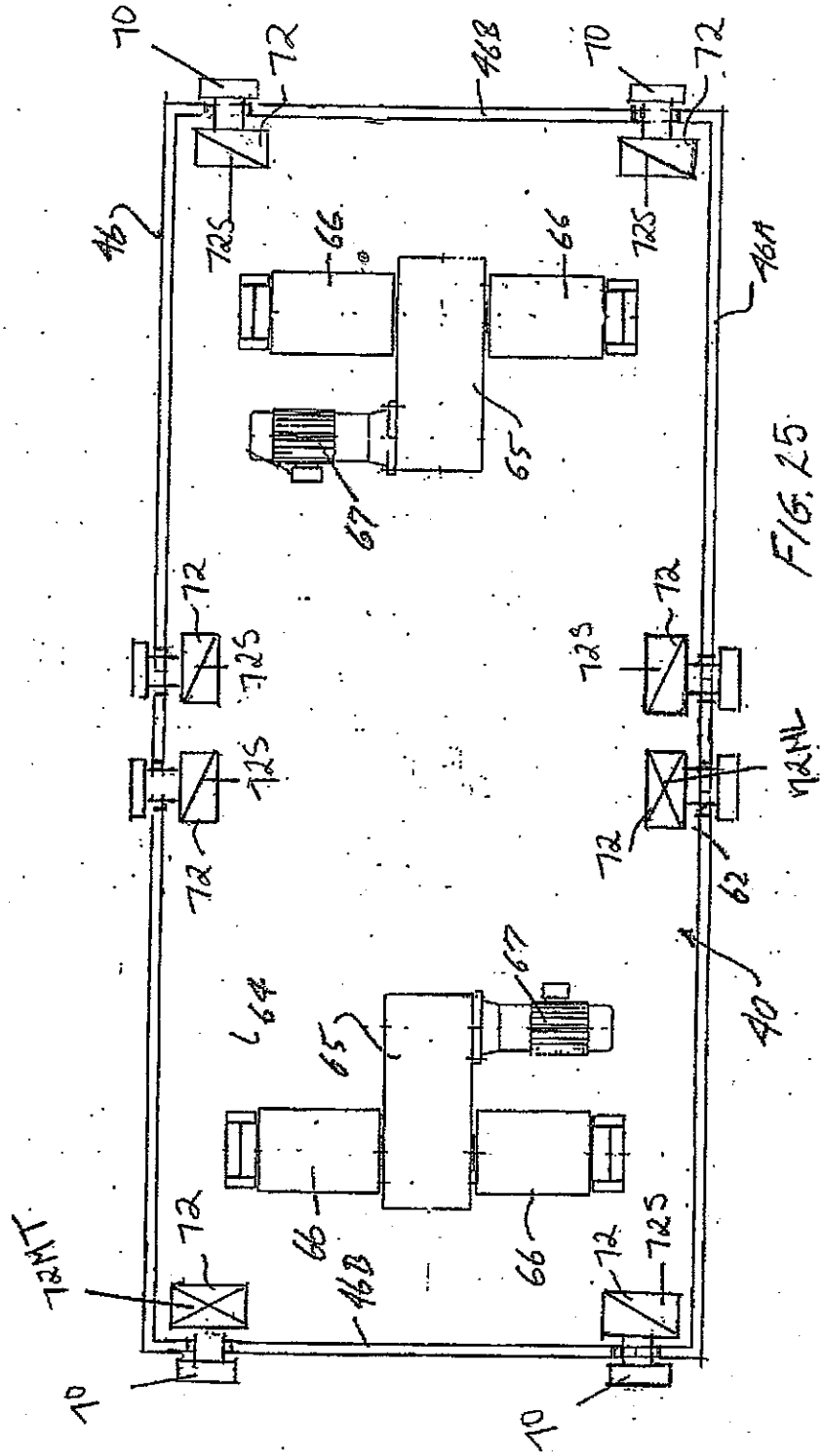
70
72
46B
70
72
72S
66
66
72S
46A
65
67
72
72S
72S
72
72
72
72
72S
72
72
72
72
72

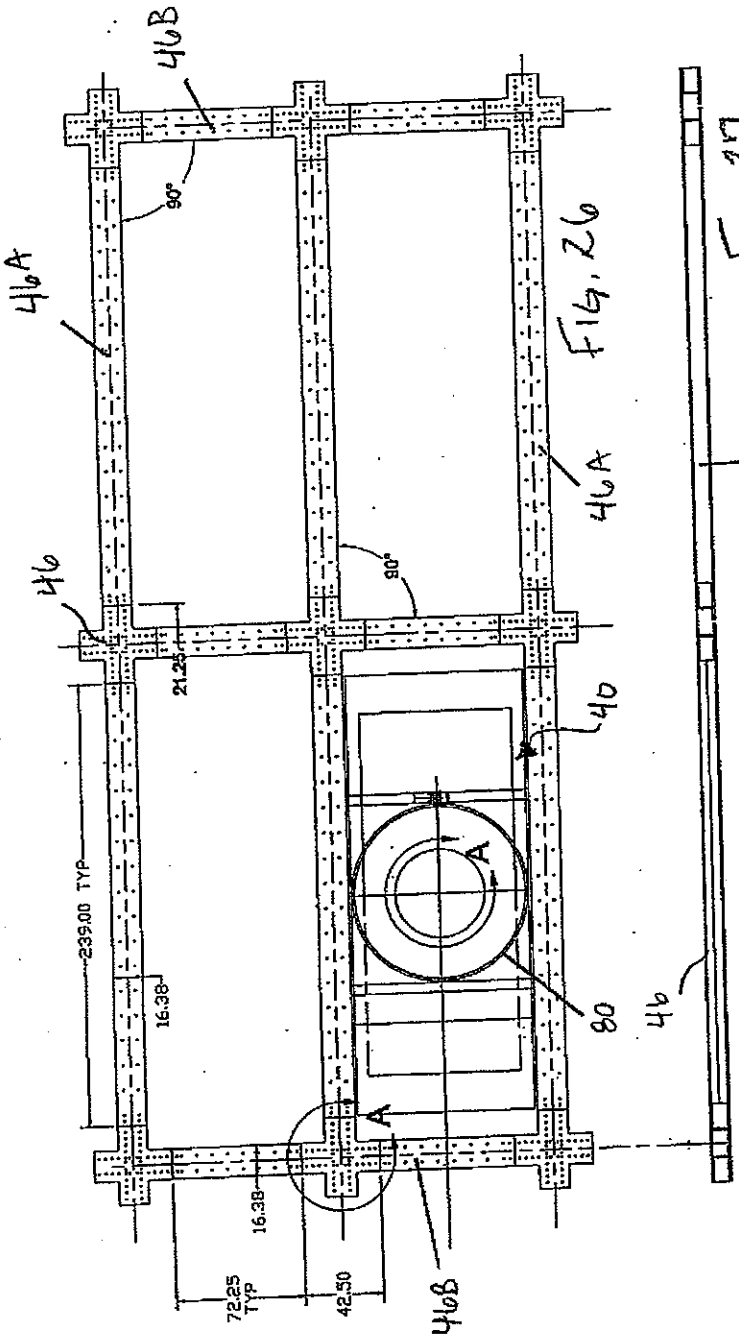

Fig. 26

Fig. 27

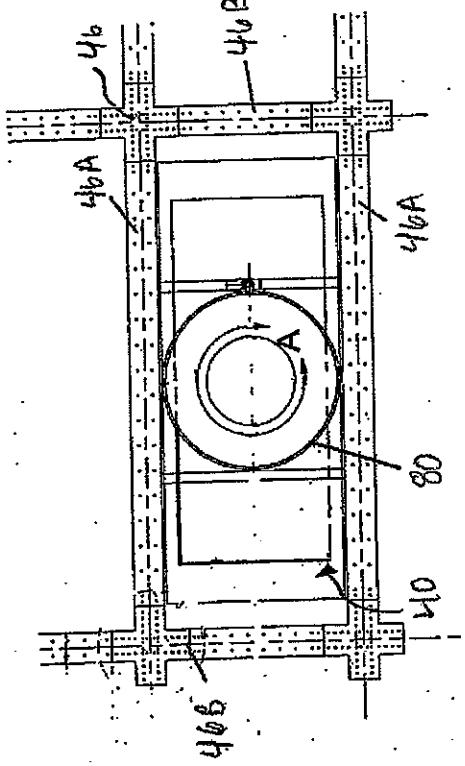

Fig. 28