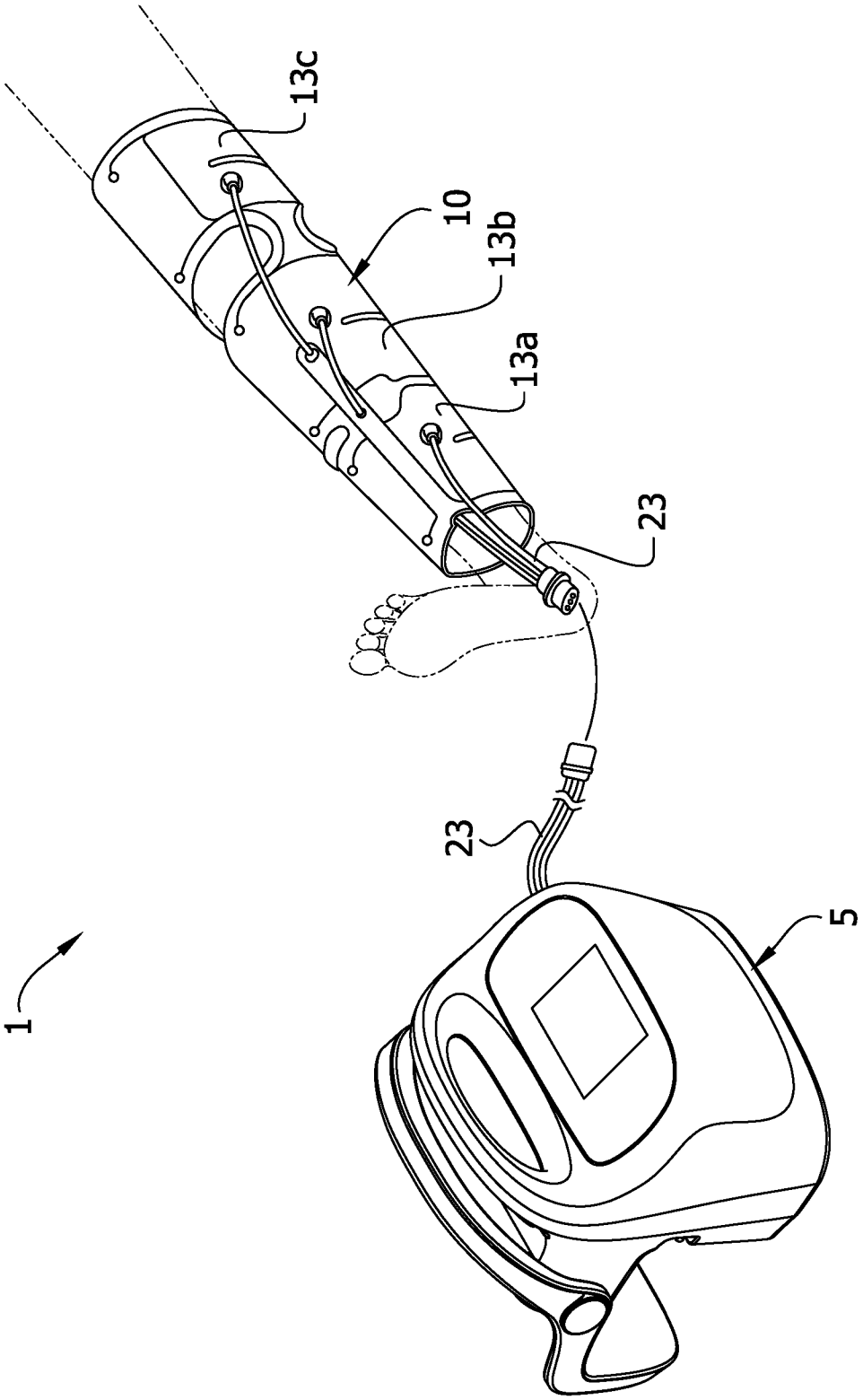

FIG. 1

FIG. 2

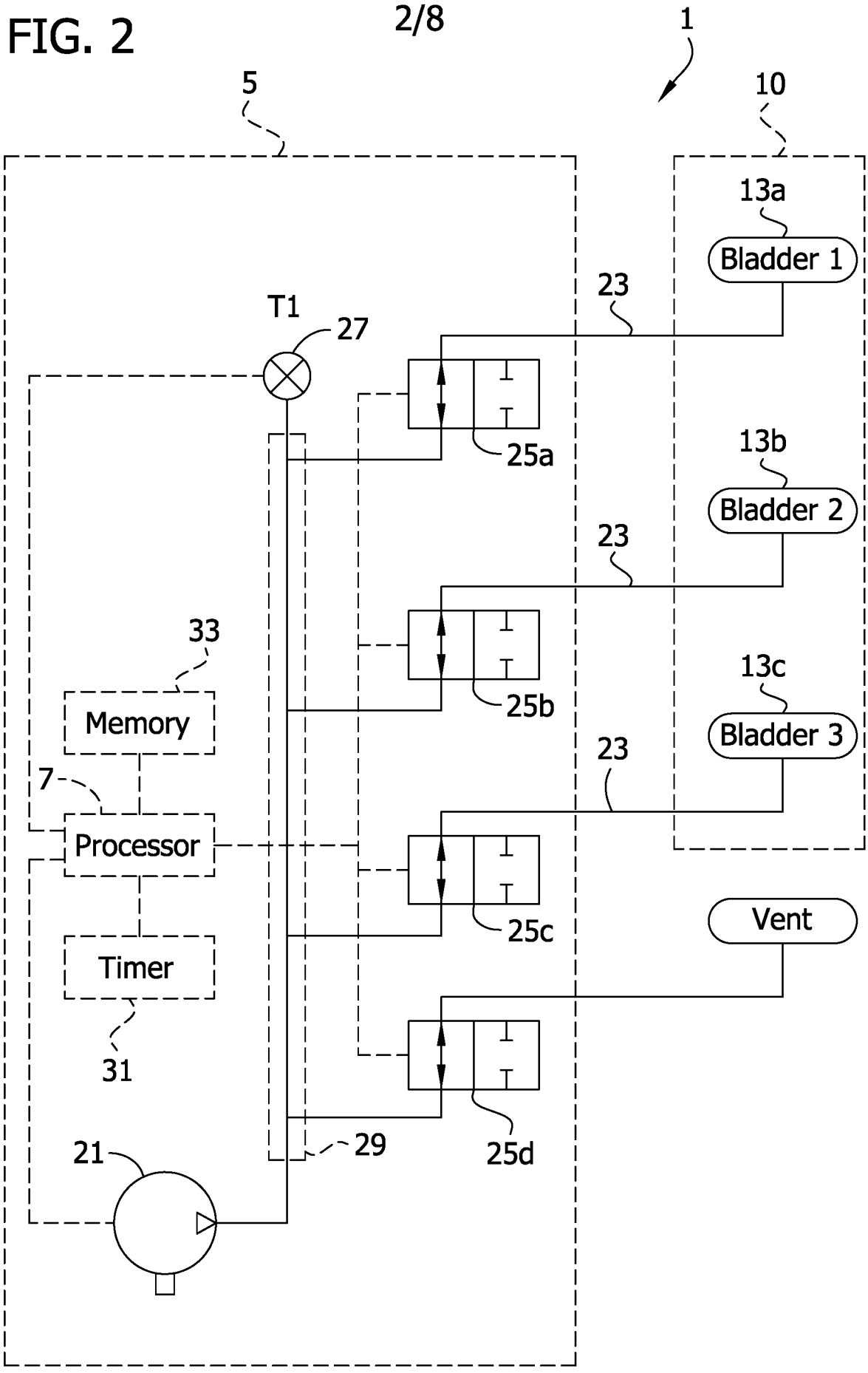
1
5
10
13a
Bladder 1
23
T1
27
25a
13b
Bladder 2
23
33
25b
13c
Bladder 3
23
Memory
7
Processor
25c
Vent
Timer
31
21
29
25d

FIG. 3

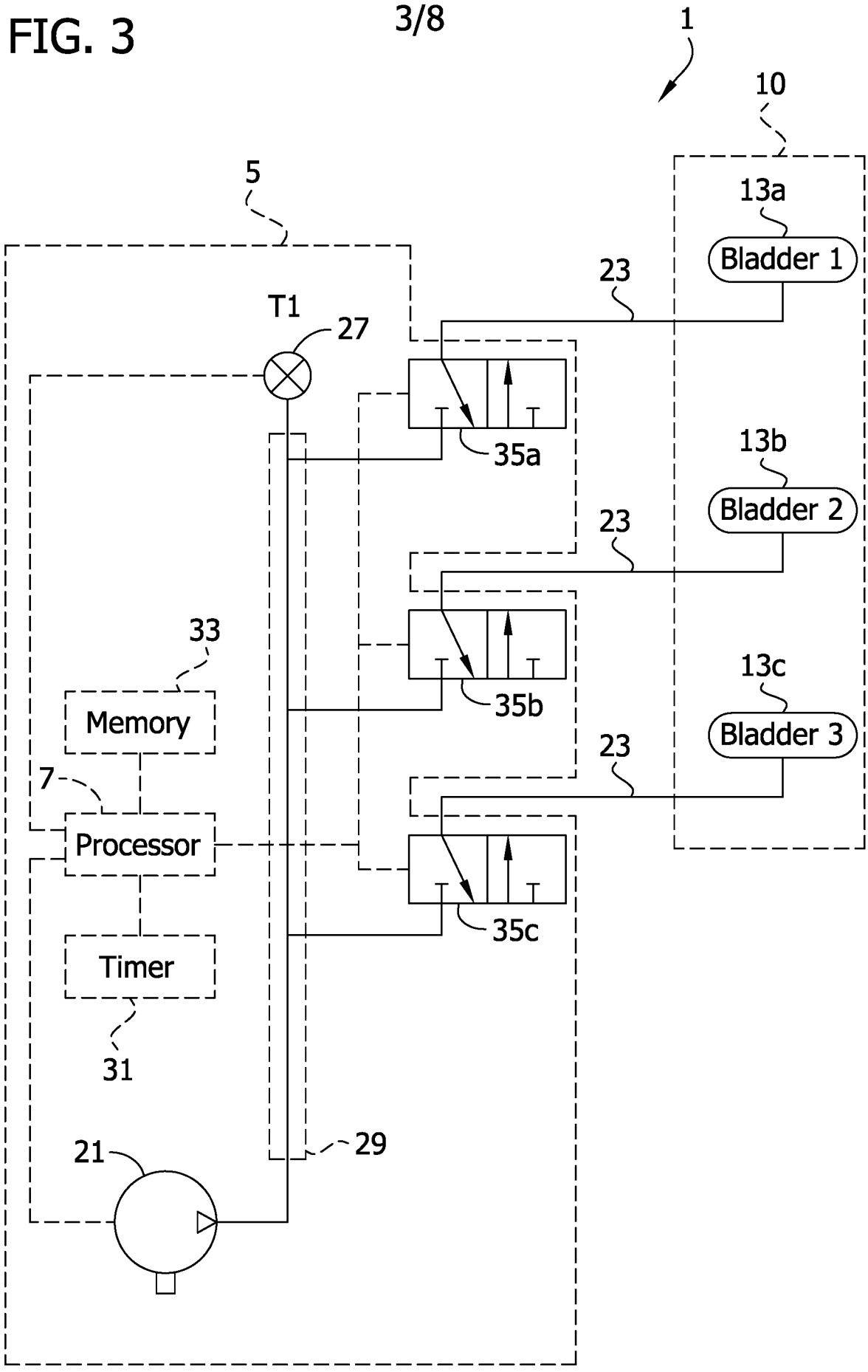
1
10
5
13a
Bladder 1
23
T1
27
35a
13b
Bladder 2
23
33
35b
13c
Bladder 3
23
Memory
7
Processor
35c
Timer
31
21
29

FIG. 4A

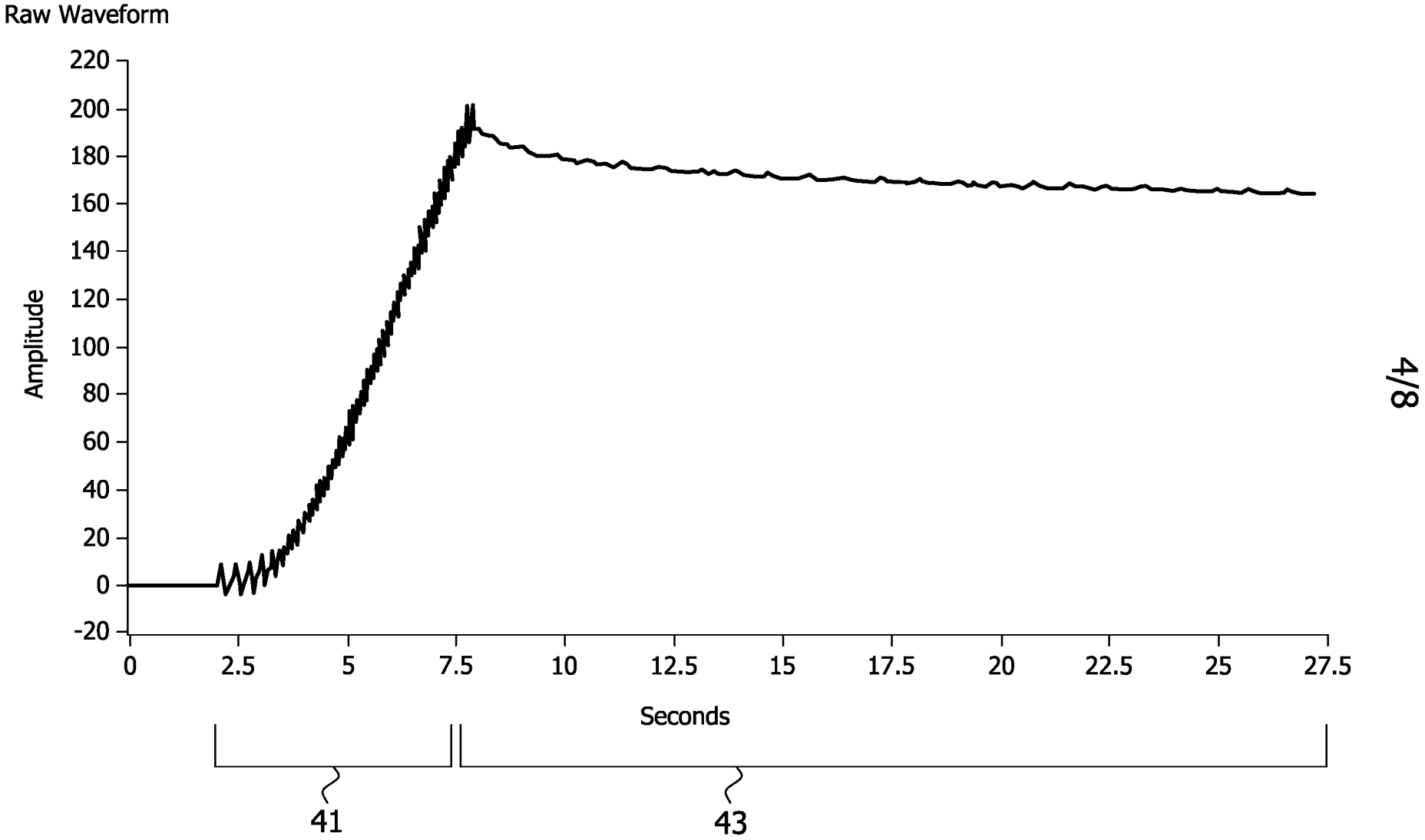
Raw Waveform
Amplitude
220
200
180
160
140
120
100
80
60
40
20
0
-20
0
2.5
5
7.5
10
12.5
15
17.5
20
22.5
25
27.5
Seconds
41
43

FIG. 4B

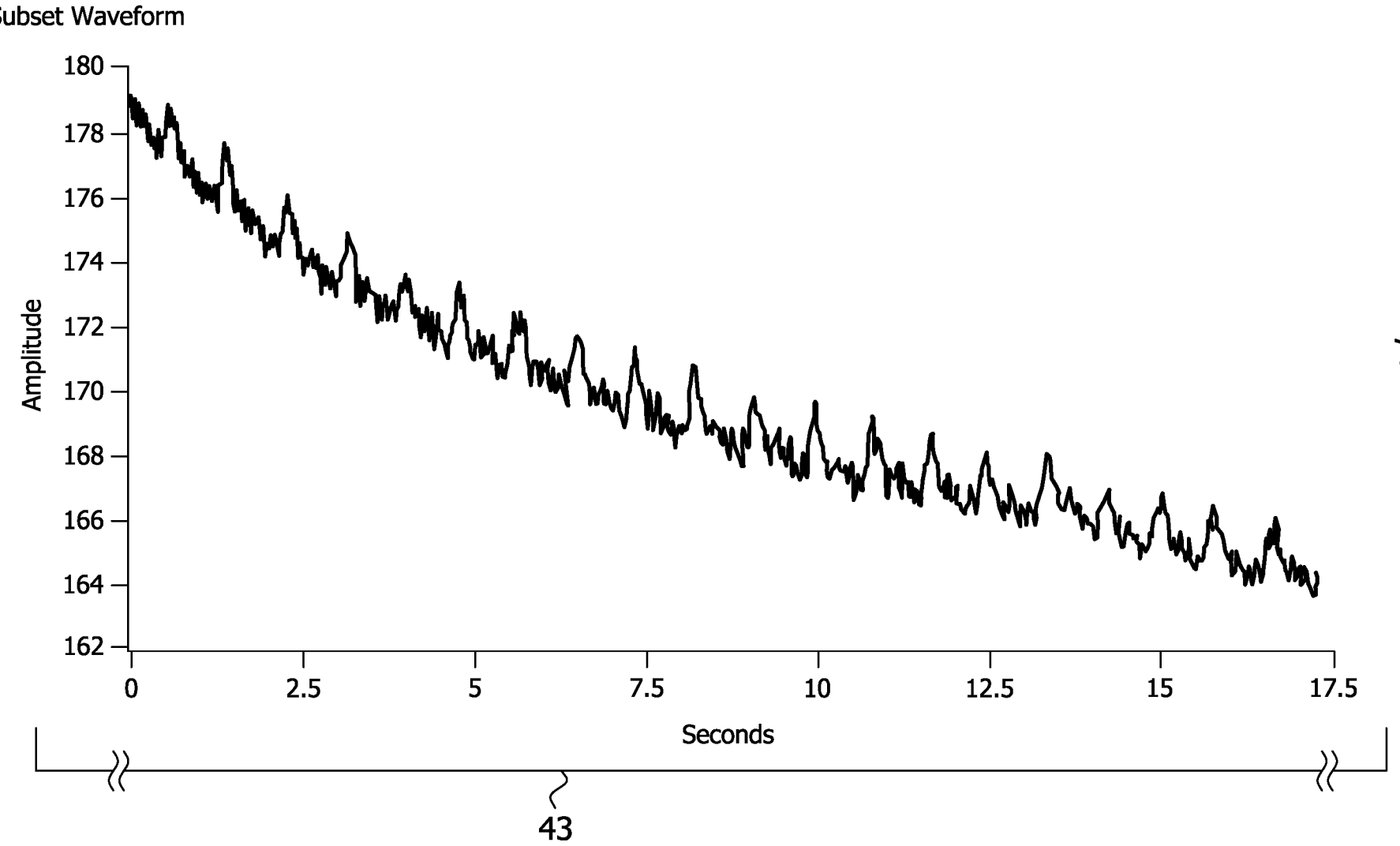
Subset Waveform
Amplitude
180
178
176
174
172
170
168
166
164
162
0
2.5
5
7.5
10
12.5
15
17.5
Seconds
43

FIG. 4C

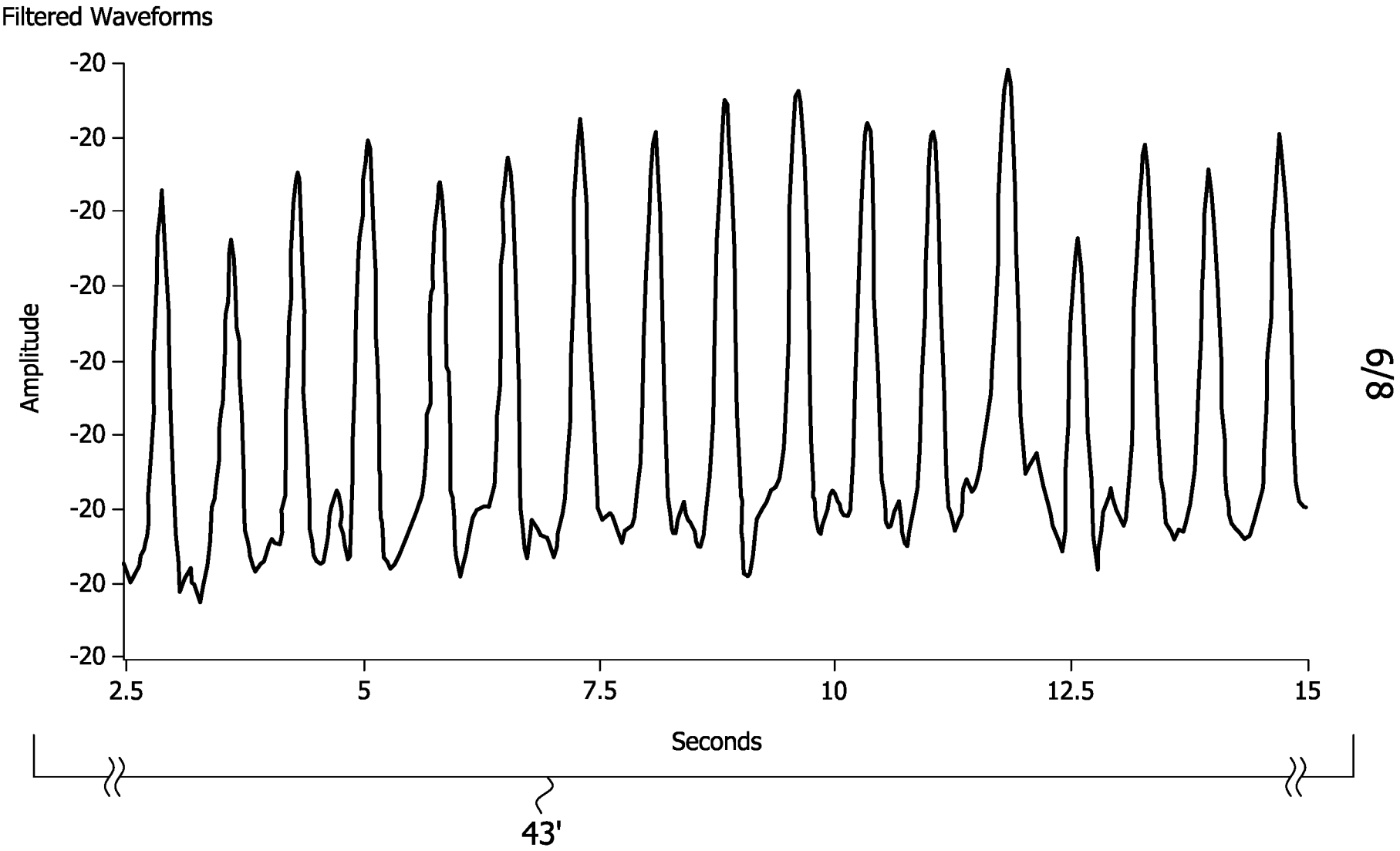
Filtered Waveforms
Amplitude
-20
-20
-20
-20
-20
-20
-20
2.5
5
7.5
10
12.5
15
Seconds
43'

FIG. 4D

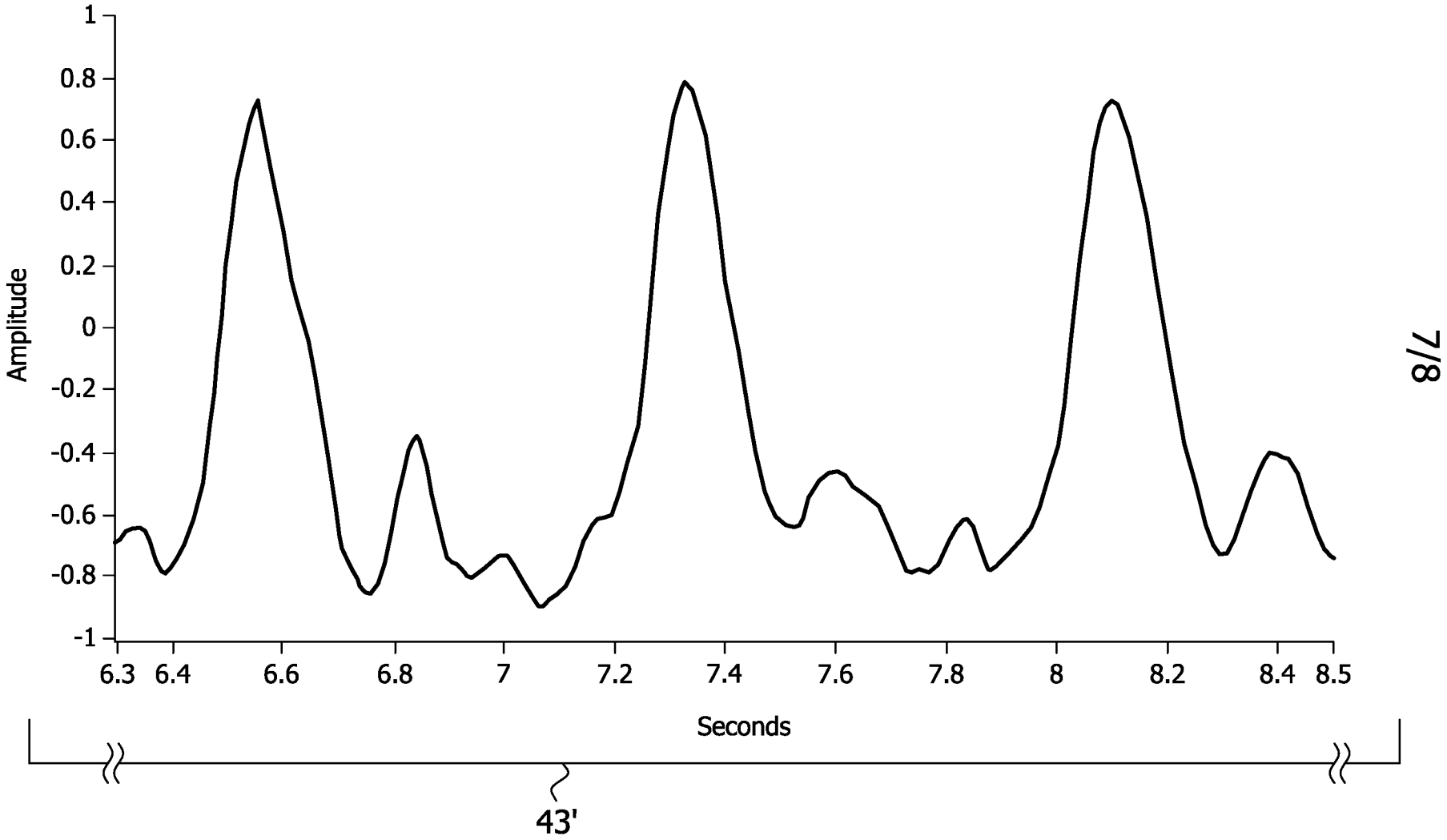
1
0.8
0.6
0.4
0.2
0
-0.2
-0.4
-0.6
-0.8
-1
Amplitude
6.3
6.4
6.6
6.8
7
7.2
7.4
7.6
7.8
8
8.2
8.4
8.5
Seconds
43'

FIG. 5

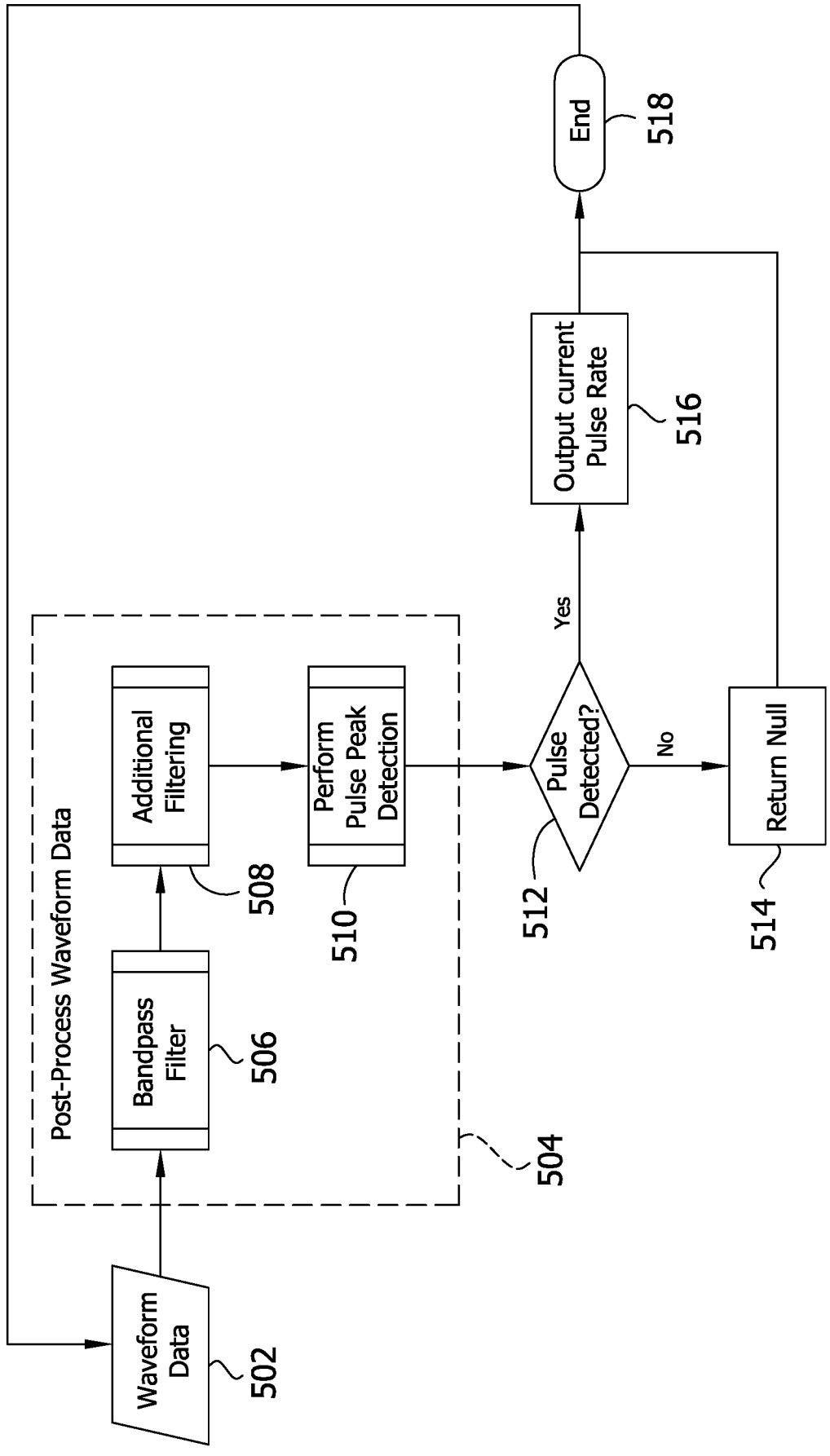
Waveform Data
502
Post-Process Waveform Data
Bandpass Filter
506
Additional Filtering
508
Perform Pulse Peak Detection
510
504
Pulse Detected?
512
Yes
No
Output current Pulse Rate
516
Return Null
514
End
518