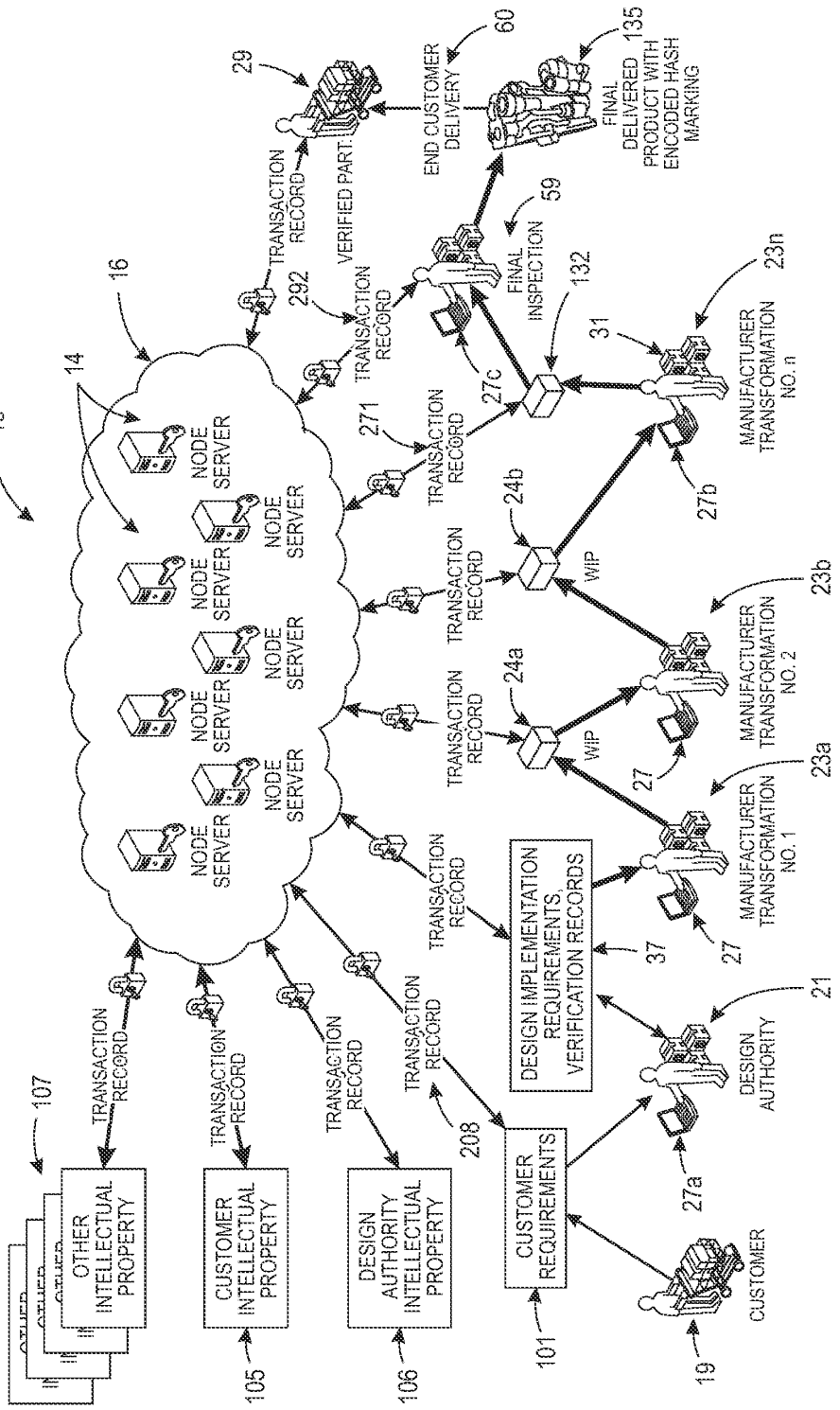
15
14
16
NODE SERVER
TRANSACTION RECORD
107
OTHER INTELLECTUAL PROPERTY
CUSTOMER INTELLECTUAL PROPERTY
105
DESIGN AUTHORITY INTELLECTUAL PROPERTY
106
CUSTOMER REQUIREMENTS
101
208
DESIGN IMPLEMENTATION REQUIREMENTS VERIFICATION RECORDS
37
DESIGN AUTHORITY
21
27a
CUSTOMER
19
MANUFACTURER TRANSFORMATION NO. 1
27
23a
WIP
24a
MANUFACTURER TRANSFORMATION NO. 2
23b
24b
27b
MANUFACTURER TRANSFORMATION NO. n
23n
31
132
FINAL INSPECTION
59
27c
271
292
VERIFIED PART
29
END CUSTOMER DELIVERY
60
FINAL DELIVERED PRODUCT WITH ENCODED HASH MARKING
135

FIG. 1

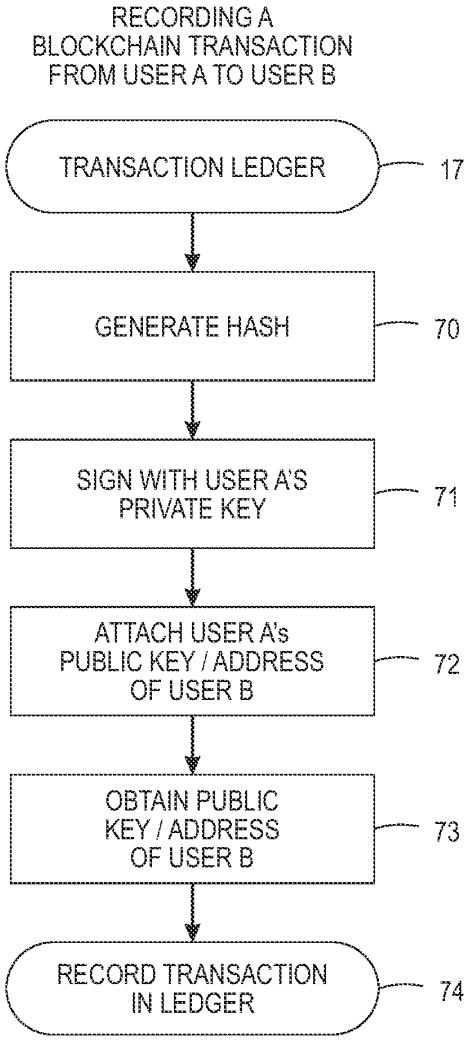
RECORDING A BLOCKCHAIN TRANSACTION FROM USER A TO USER B
TRANSACTION LEDGER
17
GENERATE HASH
70
SIGN WITH USER A'S PRIVATE KEY
71
ATTACH USER A's PUBLIC KEY / ADDRESS OF USER B
72
OBTAIN PUBLIC KEY / ADDRESS OF USER B
73
RECORD TRANSACTION IN LEDGER
74

FIG. 2

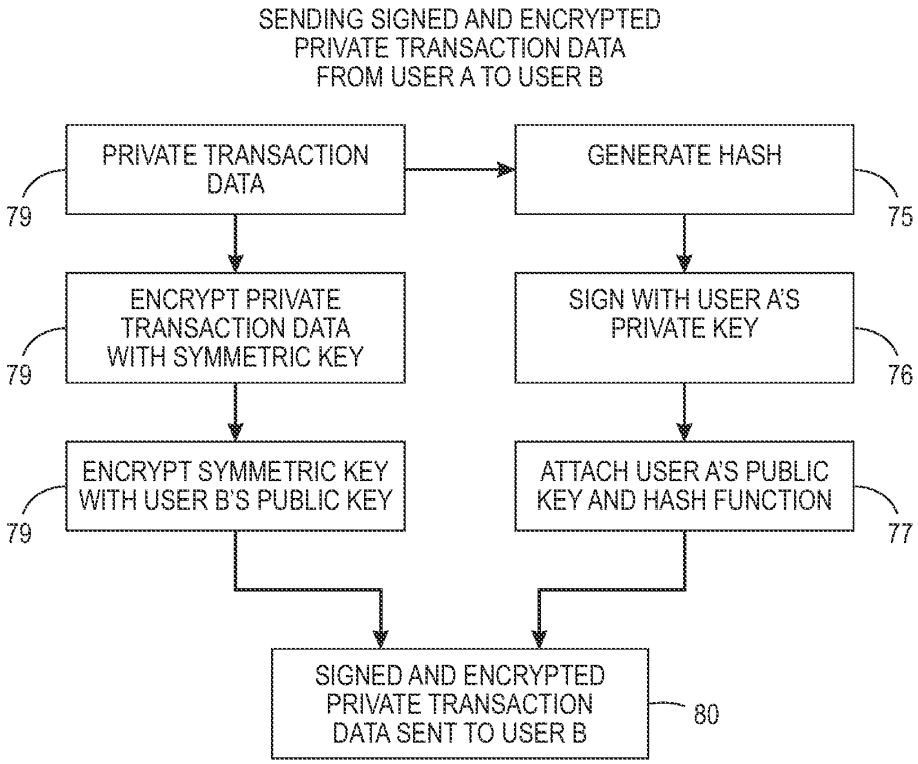
SENDING SIGNED AND ENCRYPTED PRIVATE TRANSACTION DATA FROM USER A TO USER B
PRIVATE TRANSACTION DATA
79
GENERATE HASH
75
ENCRYPT PRIVATE TRANSACTION DATA WITH SYMMETRIC KEY
79
SIGN WITH USER A'S PRIVATE KEY
76
ENCRYPT SYMMETRIC KEY WITH USER B'S PUBLIC KEY
79
ATTACH USER A'S PUBLIC KEY AND HASH FUNCTION
77
SIGNED AND ENCRYPTED PRIVATE TRANSACTION DATA SENT TO USER B
80

FIG. 3

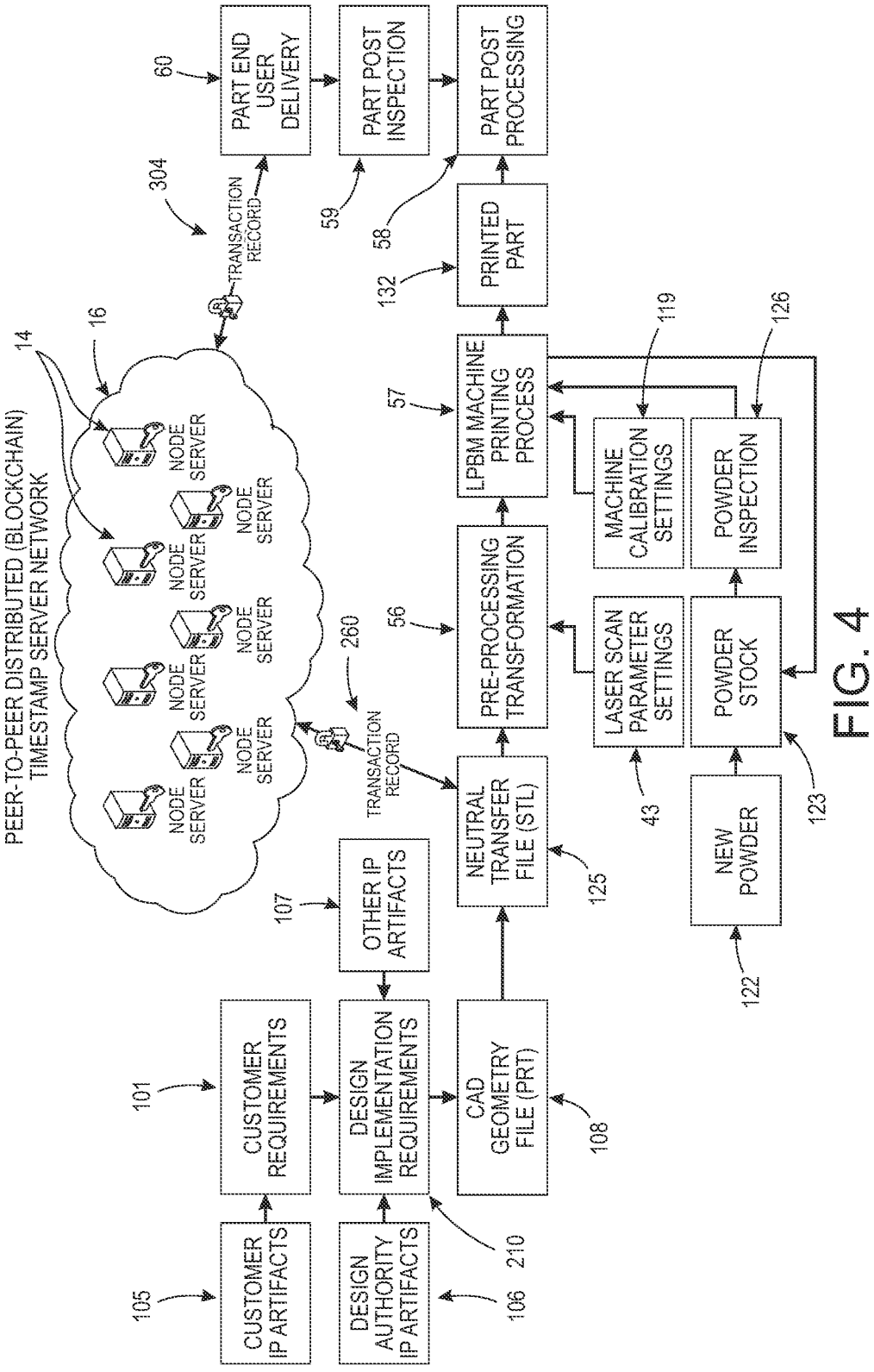
PEER-TO-PEER DISTRIBUTED (BLOCKCHAIN) TIMESTAMP SERVER NETWORK
14
16
NODE SERVER
TRANSACTION RECORD
260
304
TRANSACTION RECORD
60
PART END USER DELIVERY
59
PART POST INSPECTION
58
PART POST PROCESSING
132
PRINTED PART
57
LPBM MACHINE PRINTING PROCESS
119
MACHINE CALIBRATION SETTINGS
126
POWDER INSPECTION
56
PRE-PROCESSING TRANSFORMATION
LASER SCAN PARAMETER SETTINGS
POWDER STOCK
NEW POWDER
43
123
122
125
NEUTRAL TRANSFER FILE (STL)
107
OTHER IP ARTIFACTS
101
CUSTOMER REQUIREMENTS
DESIGN IMPLEMENTATION REQUIREMENTS
CAD GEOMETRY FILE (PRT)
108
105
CUSTOMER IP ARTIFACTS
DESIGN AUTHORITY IP ARTIFACTS
106
210

FIG. 4

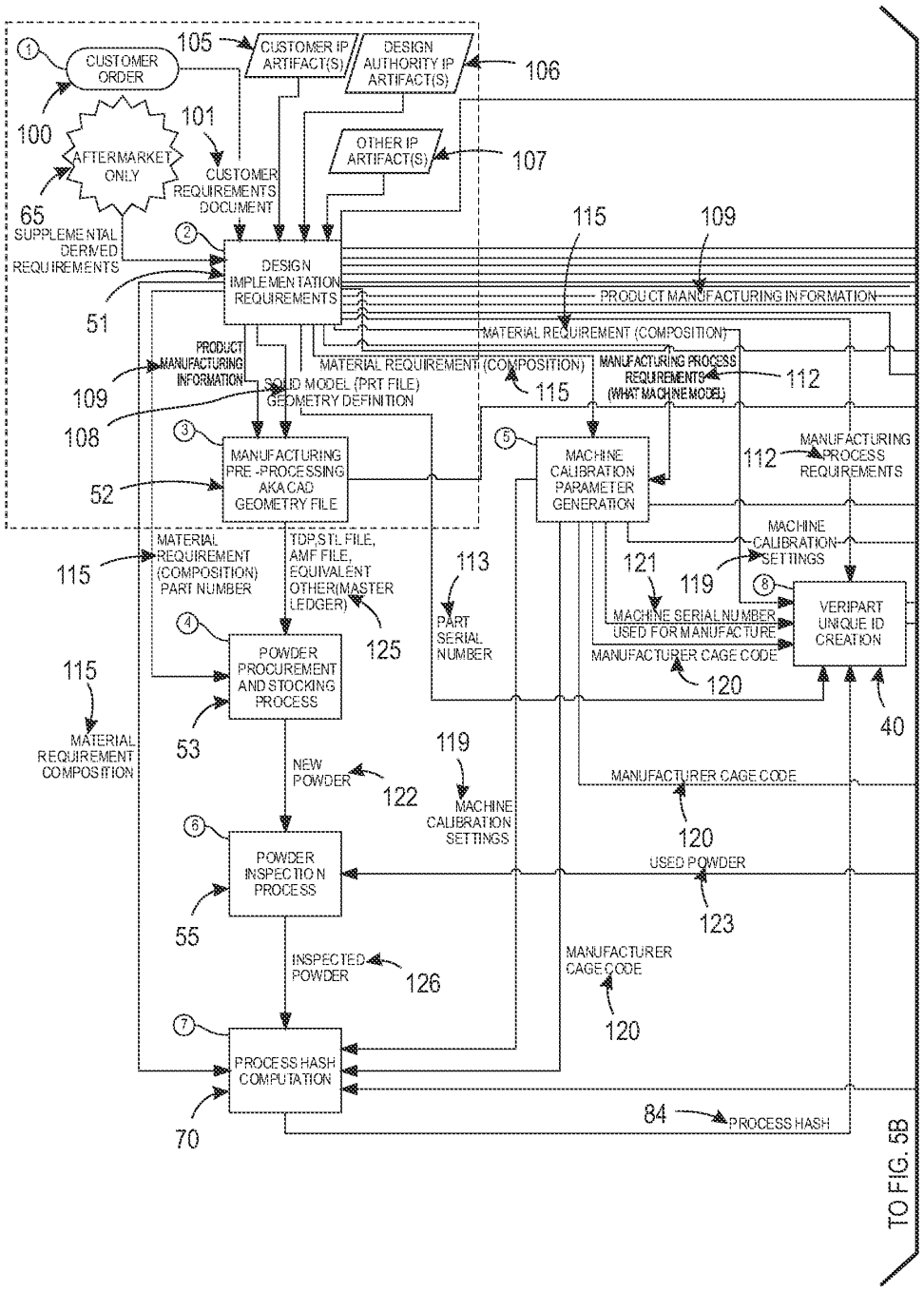
CUSTOMER ORDER
105
CUSTOMER IP ARTIFACT(S)
DESIGN AUTHORITY IP ARTIFACT(S)
106
100
101
AFTERMARKET ONLY
CUSTOMER REQUIREMENTS DOCUMENT
OTHER IP ARTIFACT(S)
107
65
SUPPLEMENTAL DERIVED REQUIREMENTS
115
109
DESIGN IMPLEMENTATION REQUIREMENTS
PRODUCT MANUFACTURING INFORMATION
51
MATERIAL REQUIREMENT (COMPOSITION)
PRODUCT MANUFACTURING INFORMATION
MATERIAL REQUIREMENT (COMPOSITION)
MANUFACTURING PROCESS REQUIREMENTS (WHAT MACHINE MODEL)
112
109
SOLID MODEL (PRT FILE) GEOMETRY DEFINITION
115
108
MANUFACTURING PRE-PROCESSING AKA CAD GEOMETRY FILE
MACHINE CALIBRATION PARAMETER GENERATION
112
MANUFACTURING PROCESS REQUIREMENTS
52
MACHINE CALIBRATION SETTINGS
115
MATERIAL REQUIREMENT (COMPOSITION) PART NUMBER
TDP,STL FILE, AMF FILE, EQUIVALENT OTHER(MASTER LEDGER)
113
121
119
8
MACHINE SERIAL NUMBER USED FOR MANUFACTURE
VERIPART UNIQUE ID CREATION
PART SERIAL NUMBER
MANUFACTURER CAGE CODE
120
125
115
POWDER PROCUREMENT AND STOCKING PROCESS
40
53
MATERIAL REQUIREMENT COMPOSITION
119
NEW POWDER
122
MACHINE CALIBRATION SETTINGS
MANUFACTURER CAGE CODE
120
POWDER INSPECTION PROCESS
USED POWDER
55
123
INSPECTED POWDER
126
MANUFACTURER CAGE CODE
120
PROCESS HASH COMPUTATION
84
PROCESS HASH
70
TO FIG. 5B

FIG. 5A

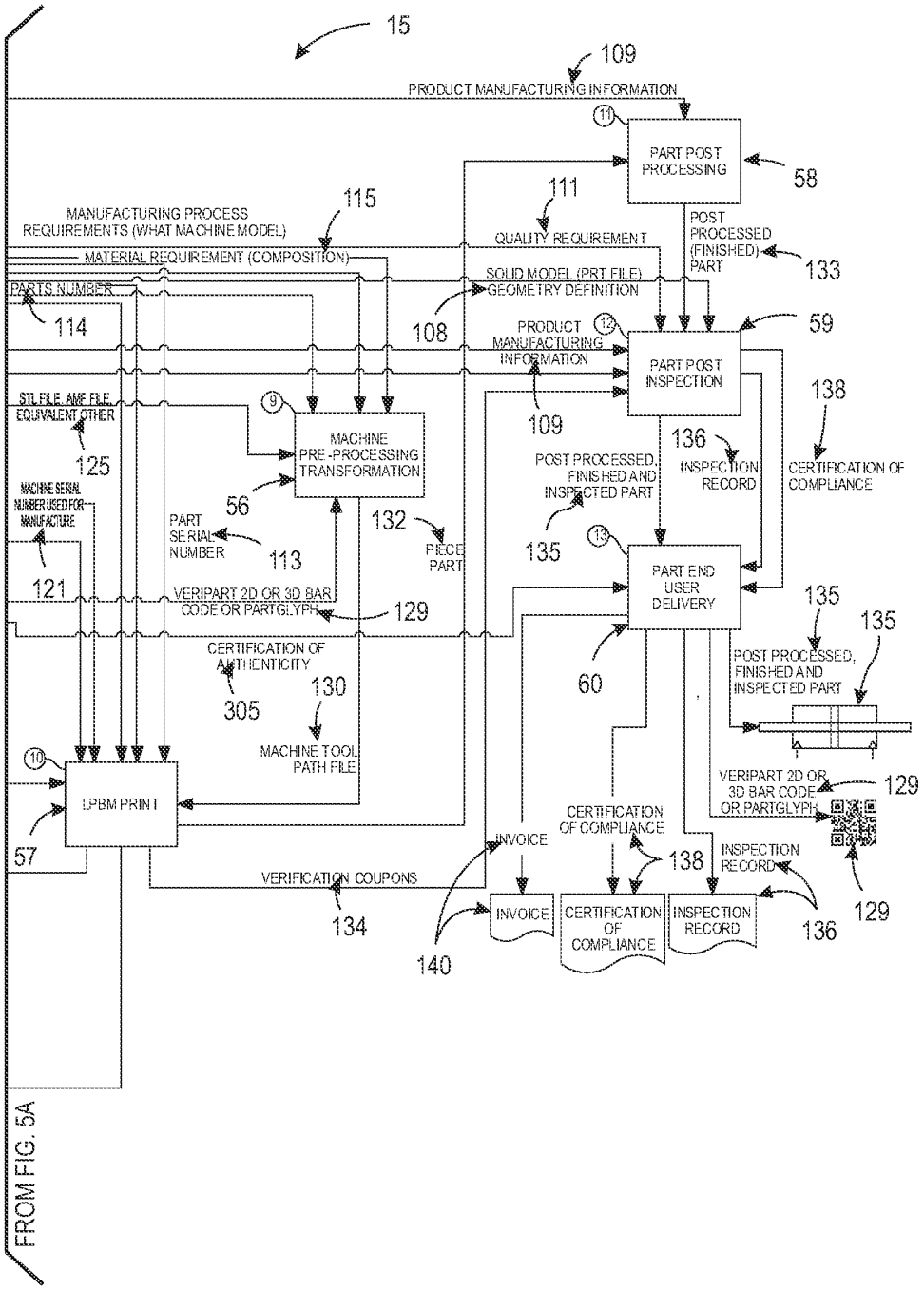
15
109
PRODUCT MANUFACTURING INFORMATION
11
PART POST PROCESSING
58
111
115
MANUFACTURING PROCESS REQUIREMENTS (WHAT MACHINE MODEL)
QUALITY REQUIREMENT
POST PROCESSED (FINISHED) PART
133
MATERIAL REQUIREMENT (COMPOSITION)
SOLID MODEL (PRT FILE) GEOMETRY DEFINITION
PARTS NUMBER
114
108
12
59
PRODUCT MANUFACTURING INFORMATION
PART POST INSPECTION
138
STL FILE AME FILE EQUIVALENT OTHER
9
MACHINE PRE-PROCESSING TRANSFORMATION
109
136
125
POST PROCESSED, FINISHED AND INSPECTED PART
INSPECTION RECORD
CERTIFICATION OF COMPLIANCE
MACHINE SERIAL NUMBER USED FOR MANUFACTURE
56
PART SERIAL NUMBER
113
132
PIECE PART
135
13
PART END USER DELIVERY
121
VERIPART 2D OR 3D BAR CODE OR PARTGLYPH
129
135
135
CERTIFICATION OF AUTHENTICITY
60
POST PROCESSED, FINISHED AND INSPECTED PART
130
305
MACHINE TOOL PATH FILE
10
LPBM PRINT
VERIPART 2D OR 3D BAR CODE OR PARTGLYPH
129
CERTIFICATION OF COMPLIANCE
INVOICE
57
138
INSPECTION RECORD
VERIFICATION COUPONS
INVOICE
CERTIFICATION OF COMPLIANCE
INSPECTION RECORD
129
134
136
140
FROM FIG. 5A

FIG. 5B

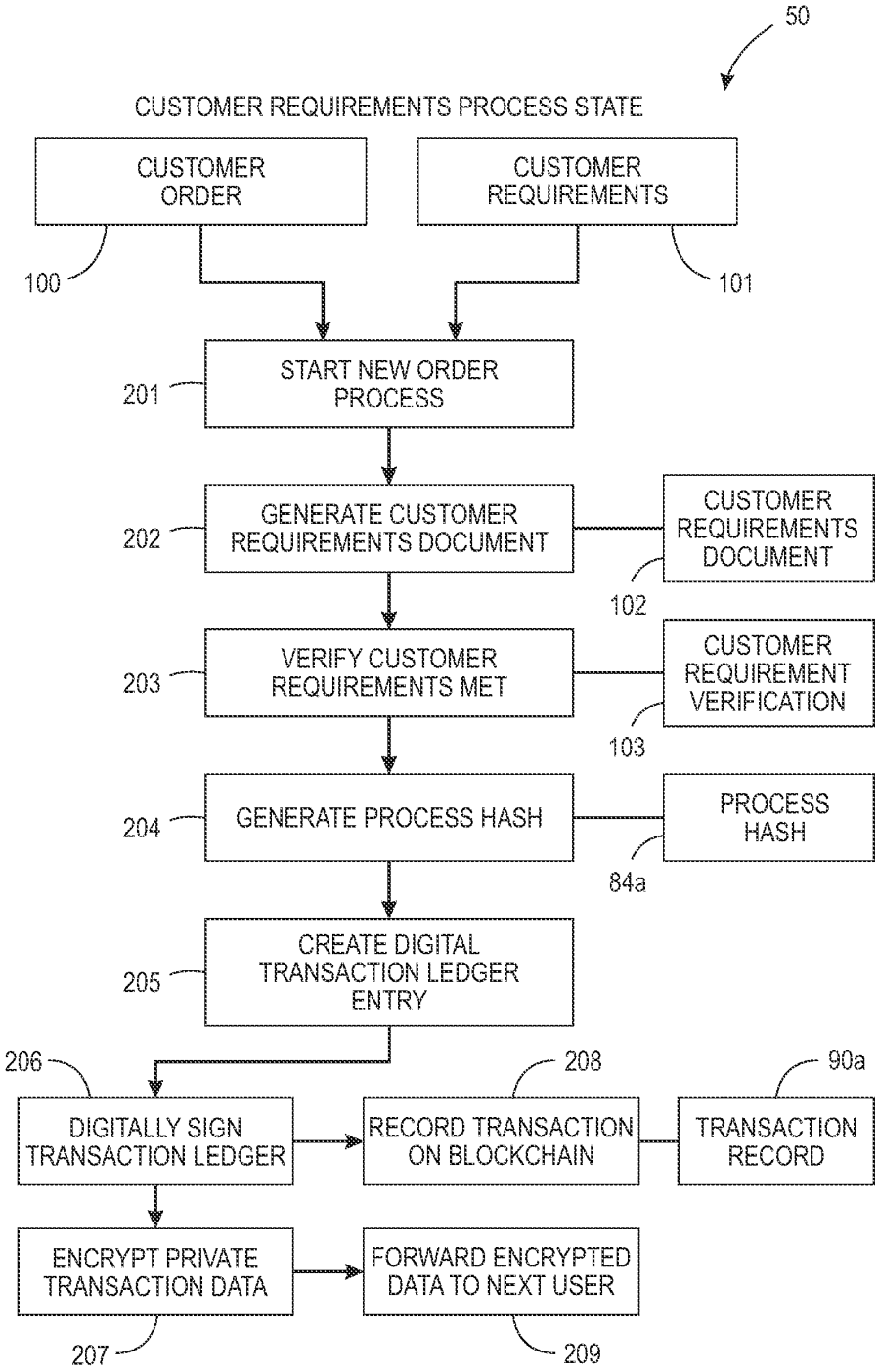
50
CUSTOMER REQUIREMENTS PROCESS STATE
CUSTOMER ORDER
CUSTOMER REQUIREMENTS
100
101
START NEW ORDER PROCESS
201
GENERATE CUSTOMER REQUIREMENTS DOCUMENT
202
CUSTOMER REQUIREMENTS DOCUMENT
102
VERIFY CUSTOMER REQUIREMENTS MET
203
CUSTOMER REQUIREMENT VERIFICATION
103
GENERATE PROCESS HASH
204
PROCESS HASH
84a
CREATE DIGITAL TRANSACTION LEDGER ENTRY
205
206
208
90a
DIGITALLY SIGN TRANSACTION LEDGER
RECORD TRANSACTION ON BLOCKCHAIN
TRANSACTION RECORD
ENCRYPT PRIVATE TRANSACTION DATA
FORWARD ENCRYPTED DATA TO NEXT USER
207
209

FIG. 6

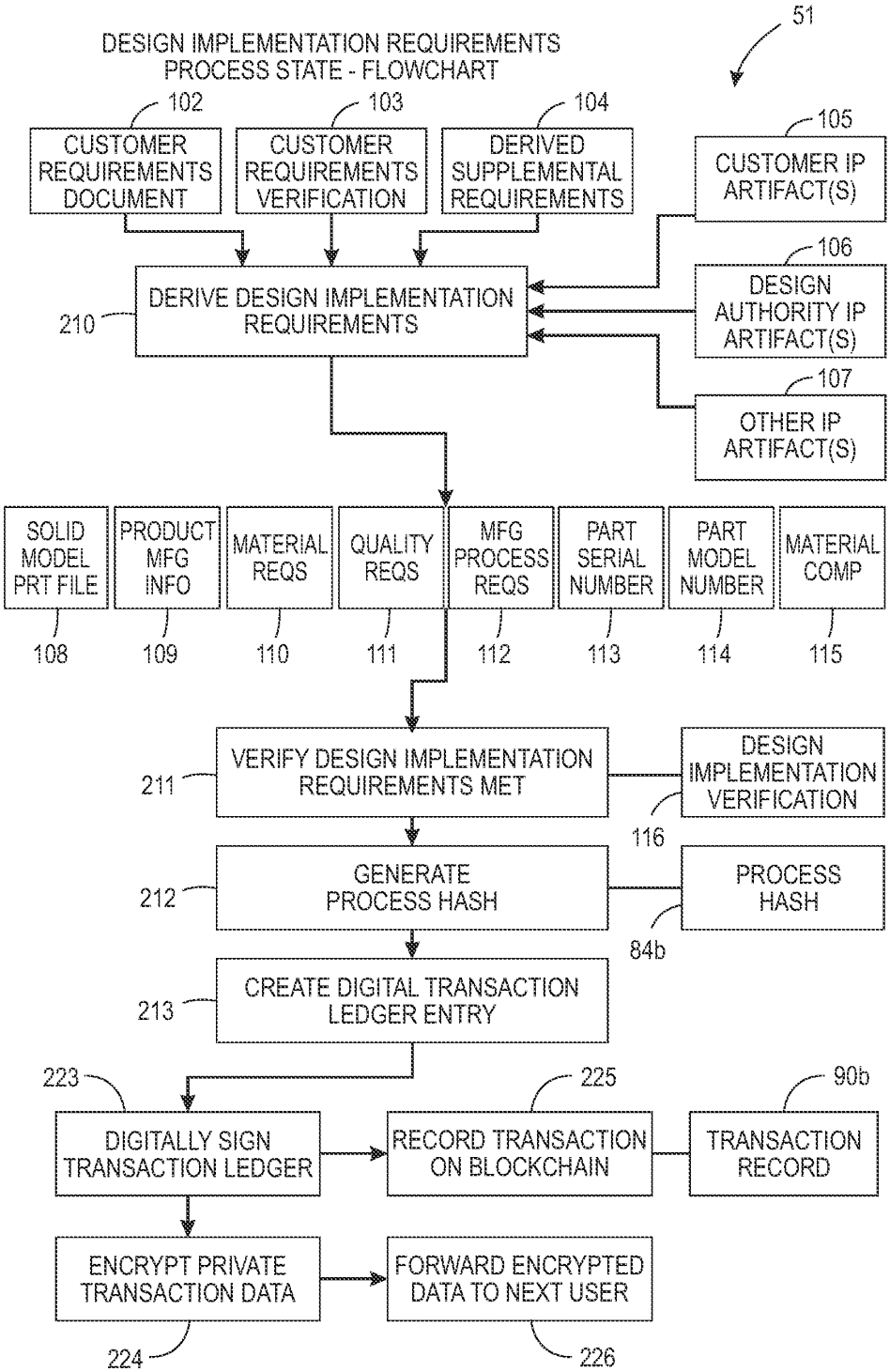
DESIGN IMPLEMENTATION REQUIREMENTS
PROCESS STATE - FLOWCHART
51
102
CUSTOMER REQUIREMENTS DOCUMENT
103
CUSTOMER REQUIREMENTS VERIFICATION
104
DERIVED SUPPLEMENTAL REQUIREMENTS
105
CUSTOMER IP ARTIFACT(S)
106
DESIGN AUTHORITY IP ARTIFACT(S)
107
OTHER IP ARTIFACT(S)
210
DERIVE DESIGN IMPLEMENTATION REQUIREMENTS
SOLID MODEL PRT FILE
PRODUCT MFG INFO
MATERIAL REQS
QUALITY REQS
MFG PROCESS REQS
PART SERIAL NUMBER
PART MODEL NUMBER
MATERIAL COMP
108
109
110
111
112
113
114
115
211
VERIFY DESIGN IMPLEMENTATION REQUIREMENTS MET
DESIGN IMPLEMENTATION VERIFICATION
116
212
GENERATE PROCESS HASH
PROCESS HASH
84b
213
CREATE DIGITAL TRANSACTION LEDGER ENTRY
223
DIGITALLY SIGN TRANSACTION LEDGER
225
RECORD TRANSACTION ON BLOCKCHAIN
90b
TRANSACTION RECORD
ENCRYPT PRIVATE TRANSACTION DATA
FORWARD ENCRYPTED DATA TO NEXT USER
224
226

FIG. 7

CUSTOMER REQUIREMENTS PROCESS STATE - I/O DATABASE

PROCESS STATE	INPUT/OUTPUT	DESCRIPTION
1	DESCRIPTION	CUSTOMER ORDER 50
1	INPUT	NONE
1	OUTPUT	CUSTOMER REQUIREMENTS DOCUMENT 102
1	OUTPUT	CUSTOMER IP ARTIFACT(S) 105
1	OUTPUT	DESIGN AUTHORITY ARTIFACT(S) 106
1	OUTPUT	OTHER IP ARTIFACT(S) 107

FIG. 8

DESIGN IMPLEMENTATION REQUIREMENTS PROCESS STATE - I/O DATABASE

PROCESS STATE	INPUT/OUTPUT	DESCRIPTION
2	DESCRIPTION	DESIGN IMPLEMENTATION REQUIREMENTS 51
2	INPUT	CUSTOMER REQUIREMENTS DOCUMENT 102
2	INPUT	CUSTOMER IP ARTIFACT(S) 105
2	INPUT	DESIGN AUTHORITY ARTIFACT(S) 106
2	INPUT	OTHER IP ARTIFACT(S) 107
2	OUTPUT	SOLID MODEL(PRT FILE) - GEOMETRY DEFINITION 108
2	OUTPUT	PRODUCT MANUFACTURING INFORMATION 109
2	OUTPUT	MATERIAL REQUIREMENT (COMPOSITION) 110
2	OUTPUT	QUALITY REQUIREMENT 111
2	OUTPUT	MANUFACTURING PROCESS REQUIREMENTS (WHAT MACHINE MODEL) 112
2	OUTPUT	PART SERIAL NUMBER 113
2	OUTPUT	MATERIAL REQUIREMENT (COMPOSITION) 115
2	OUTPUT	PART NUMBER 114

FIG. 9

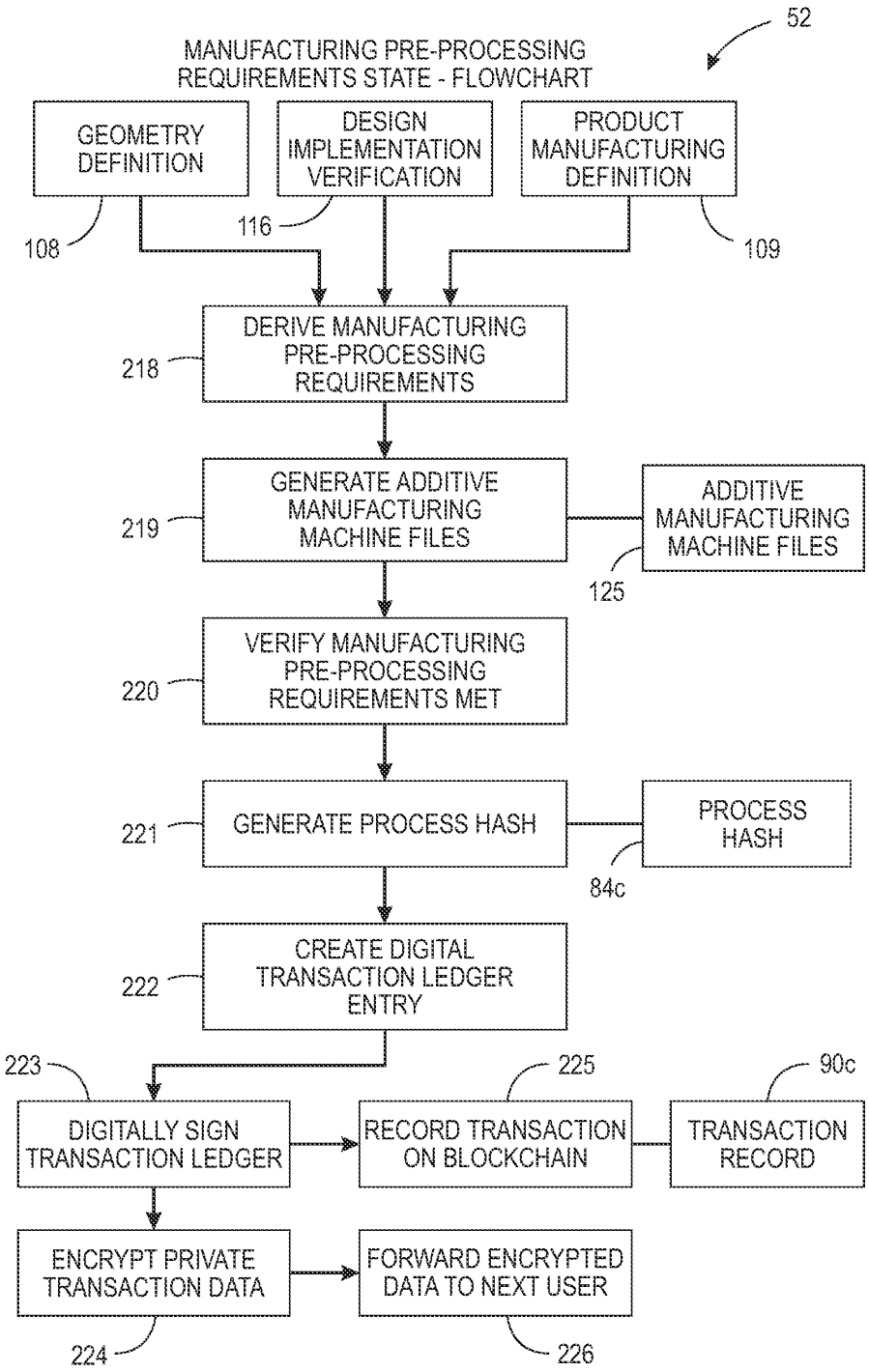
52
MANUFACTURING PRE-PROCESSING REQUIREMENTS STATE - FLOWCHART
GEOMETRY DEFINITION
DESIGN IMPLEMENTATION VERIFICATION
PRODUCT MANUFACTURING DEFINITION
108
116
109
DERIVE MANUFACTURING PRE-PROCESSING REQUIREMENTS
218
GENERATE ADDITIVE MANUFACTURING MACHINE FILES
219
ADDITIVE MANUFACTURING MACHINE FILES
125
VERIFY MANUFACTURING PRE-PROCESSING REQUIREMENTS MET
220
GENERATE PROCESS HASH
221
PROCESS HASH
84c
CREATE DIGITAL TRANSACTION LEDGER ENTRY
222
223
225
90c
DIGITALLY SIGN TRANSACTION LEDGER
RECORD TRANSACTION ON BLOCKCHAIN
TRANSACTION RECORD
ENCRYPT PRIVATE TRANSACTION DATA
FORWARD ENCRYPTED DATA TO NEXT USER
224
226

FIG. 10

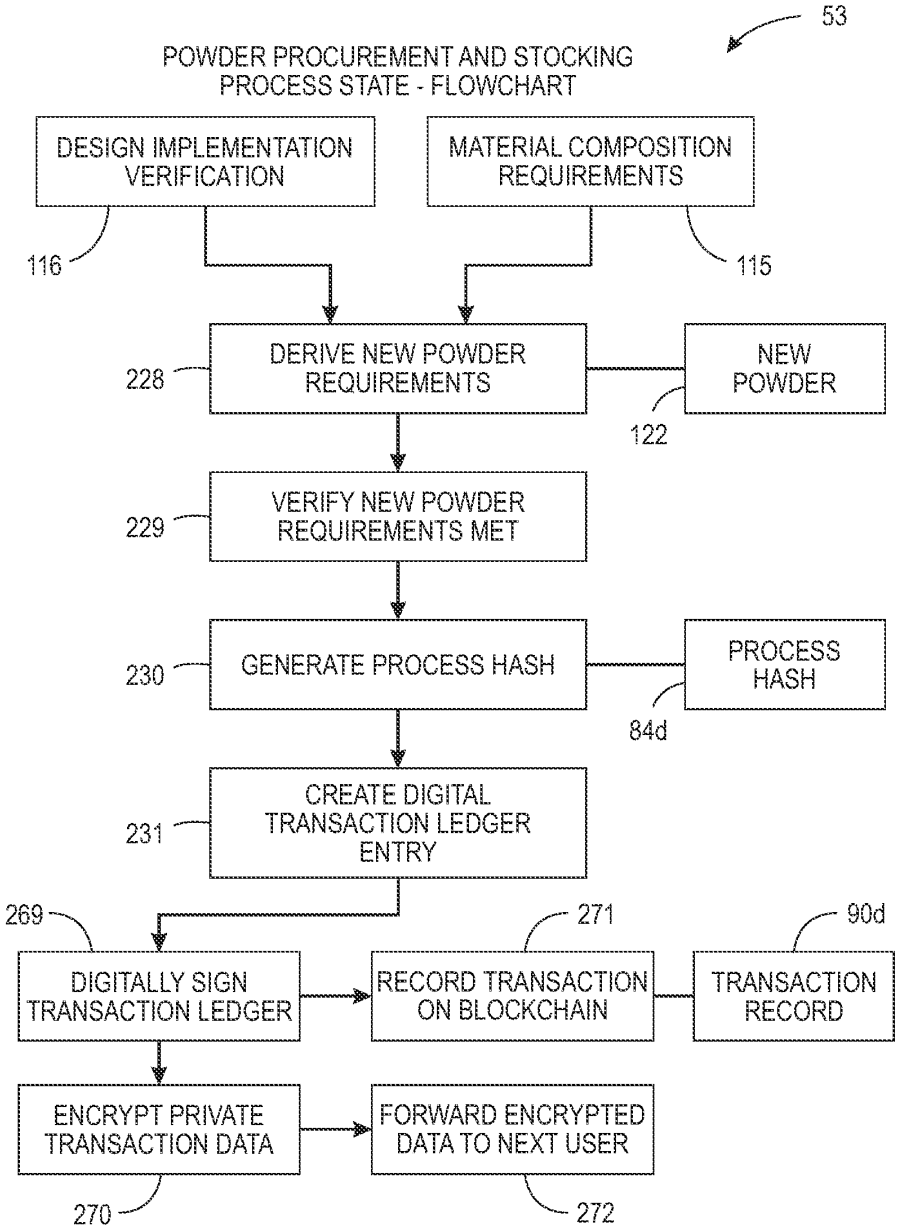
53
POWDER PROCUREMENT AND STOCKING PROCESS STATE - FLOWCHART
DESIGN IMPLEMENTATION VERIFICATION
MATERIAL COMPOSITION REQUIREMENTS
116
115
228
DERIVE NEW POWDER REQUIREMENTS
NEW POWDER
122
229
VERIFY NEW POWDER REQUIREMENTS MET
230
GENERATE PROCESS HASH
PROCESS HASH
84d
231
CREATE DIGITAL TRANSACTION LEDGER ENTRY
269
271
90d
DIGITALLY SIGN TRANSACTION LEDGER
RECORD TRANSACTION ON BLOCKCHAIN
TRANSACTION RECORD
ENCRYPT PRIVATE TRANSACTION DATA
FORWARD ENCRYPTED DATA TO NEXT USER
270
272

FIG. 11

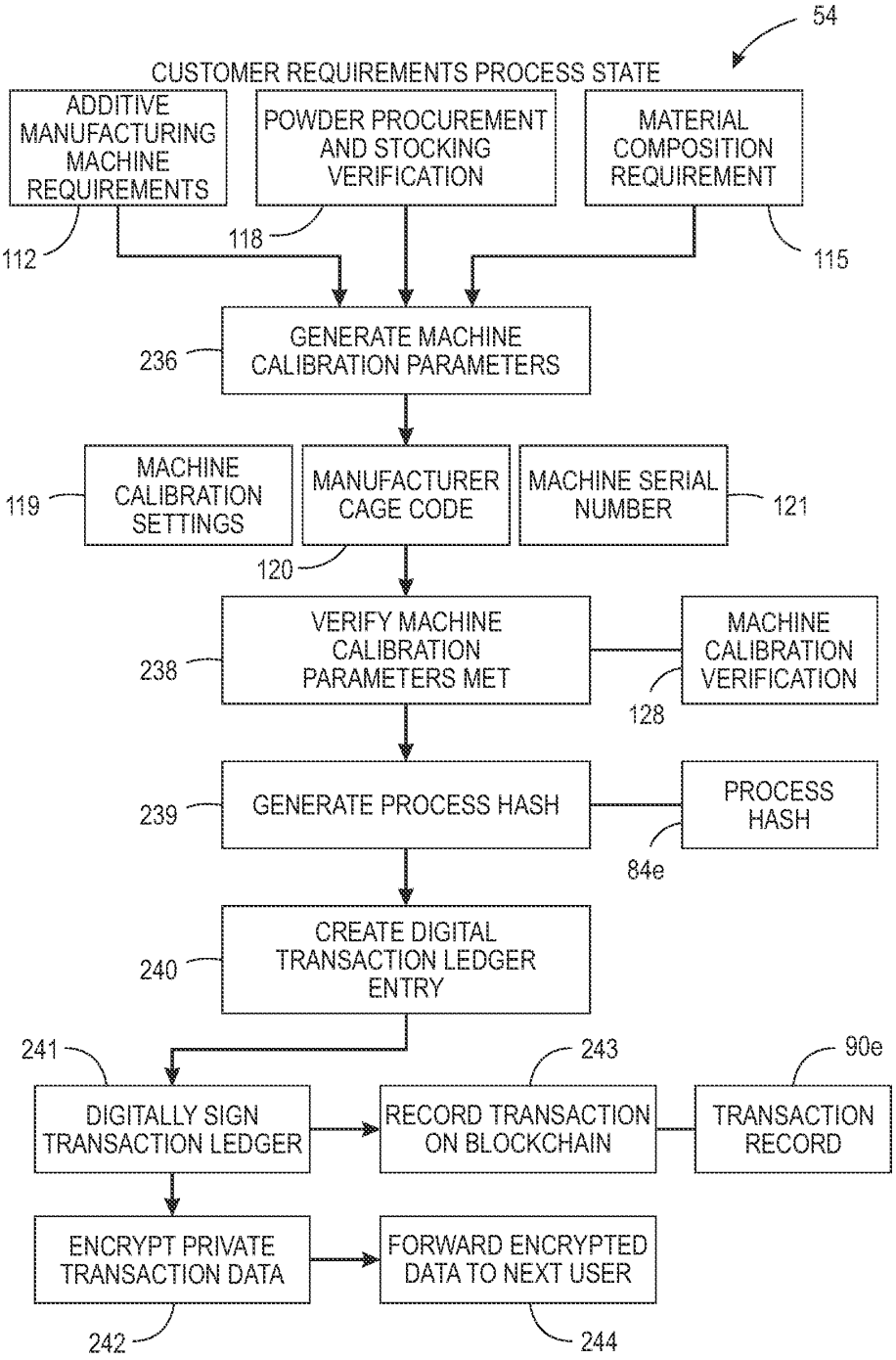
54
CUSTOMER REQUIREMENTS PROCESS STATE
ADDITIVE MANUFACTURING MACHINE REQUIREMENTS
POWDER PROCUREMENT AND STOCKING VERIFICATION
MATERIAL COMPOSITION REQUIREMENT
112
118
115
GENERATE MACHINE CALIBRATION PARAMETERS
236
MACHINE CALIBRATION SETTINGS
MANUFACTURER CAGE CODE
MACHINE SERIAL NUMBER
119
121
120
VERIFY MACHINE CALIBRATION PARAMETERS MET
238
MACHINE CALIBRATION VERIFICATION
128
GENERATE PROCESS HASH
239
PROCESS HASH
84e
CREATE DIGITAL TRANSACTION LEDGER ENTRY
240
241
243
90e
DIGITALLY SIGN TRANSACTION LEDGER
RECORD TRANSACTION ON BLOCKCHAIN
TRANSACTION RECORD
ENCRYPT PRIVATE TRANSACTION DATA
FORWARD ENCRYPTED DATA TO NEXT USER
242
244

FIG. 12

MANUFACTURING PRE-PROCESSING PROCESS STATE - I/O DATABASE

PROCESS STATE	INPUT/OUTPUT	DESCRIPTION
3	DESCRIPTION	MANUFACTURING PRE-PROCESSING (AKA CAD GEOMETRY FILE) 52
3	INPUT	SOLID MODEL (PRT FILE) - GEOMETRY DEFINITION 108
3	INPUT	PRODUCT MANUFACTURING INFORMATION 109
3	OUTPUT	STL FILE, AMF FILE, EQUIVALENT OTHER 125

FIG. 13

POWDER PROCUREMENT AND STOCKING PROCESS STATE - I/O DATABASE

PROCESS STATE	INPUT/OUTPUT	DESCRIPTION
4	DESCRIPTION	POWDER PROCUREMENT AND STOCKING PROCESS 53
4	INPUT	MATERIAL REQUIREMENT (COMPOSITION) 115
4	OUTPUT	NEW POWDER 122

FIG. 14

MACHINE CALIBRATION PARAMETER GENERATION PROCESS STATE - I/O DATABASE

PROCESS STATE	INPUT/OUTPUT	DESCRIPTION
5	DESCRIPTION	MACHINE CALIBRATION PARAMETER GENERATION 54
5	INPUT	MATERIAL REQUIREMENT (COMPOSITION) 115
5	INPUT	MANUFACTURING PROCESS REQUIREMENTS 112
5	OUTPUT	(WHAT MACHINE MODEL) MACHINE CALIBRATION SETTINGS 119
5	OUTPUT	MANUFACTURER CAGE CODE 120
	OUTPUT	MACHINE SERIAL NUMBER USED FOR MANUFACTURE 121

FIG. 15

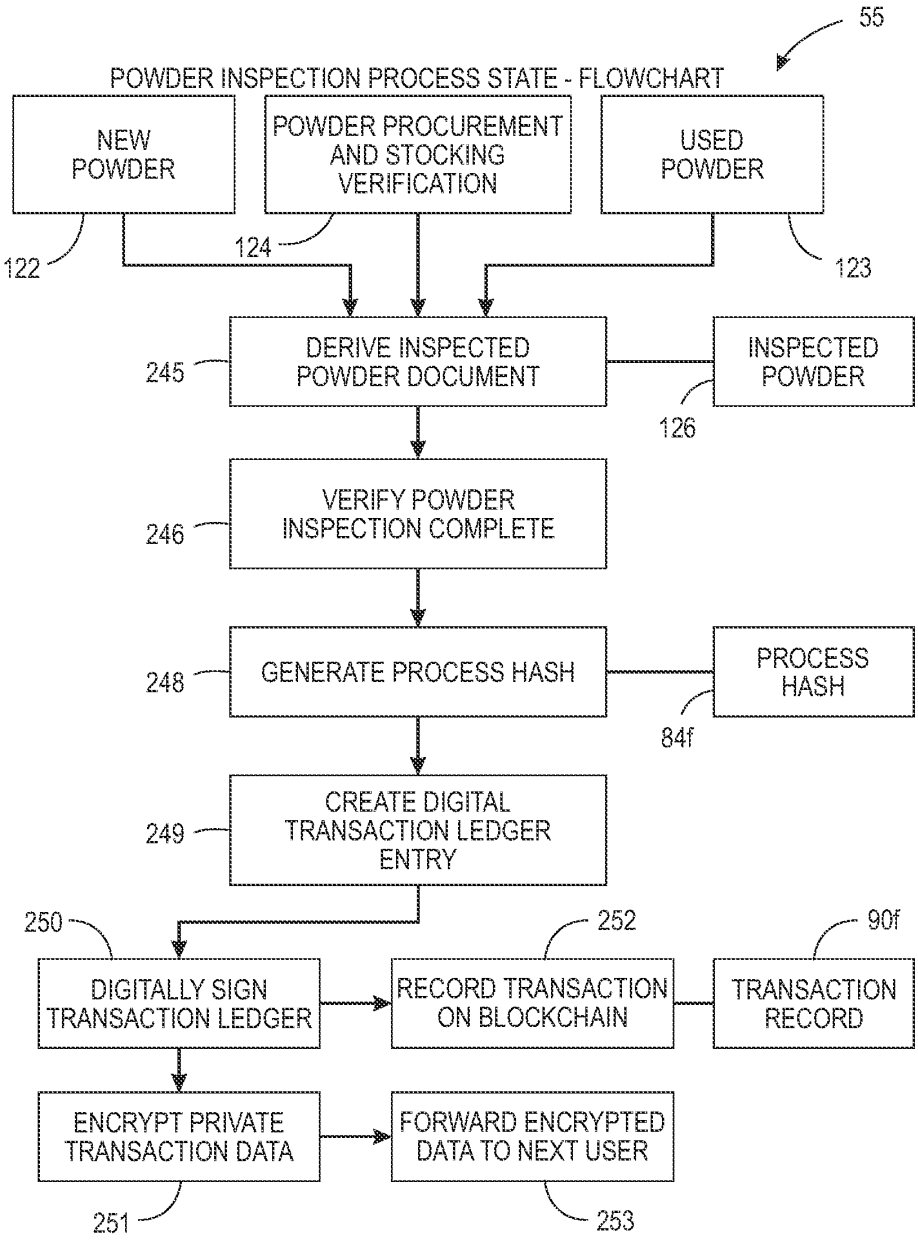
55
POWDER INSPECTION PROCESS STATE - FLOWCHART
NEW POWDER
POWDER PROCUREMENT AND STOCKING VERIFICATION
USED POWDER
122
124
123
245
DERIVE INSPECTED POWDER DOCUMENT
INSPECTED POWDER
126
246
VERIFY POWDER INSPECTION COMPLETE
248
GENERATE PROCESS HASH
PROCESS HASH
84f
249
CREATE DIGITAL TRANSACTION LEDGER ENTRY
250
252
90f
DIGITALLY SIGN TRANSACTION LEDGER
RECORD TRANSACTION ON BLOCKCHAIN
TRANSACTION RECORD
ENCRYPT PRIVATE TRANSACTION DATA
FORWARD ENCRYPTED DATA TO NEXT USER
251
253

FIG. 16

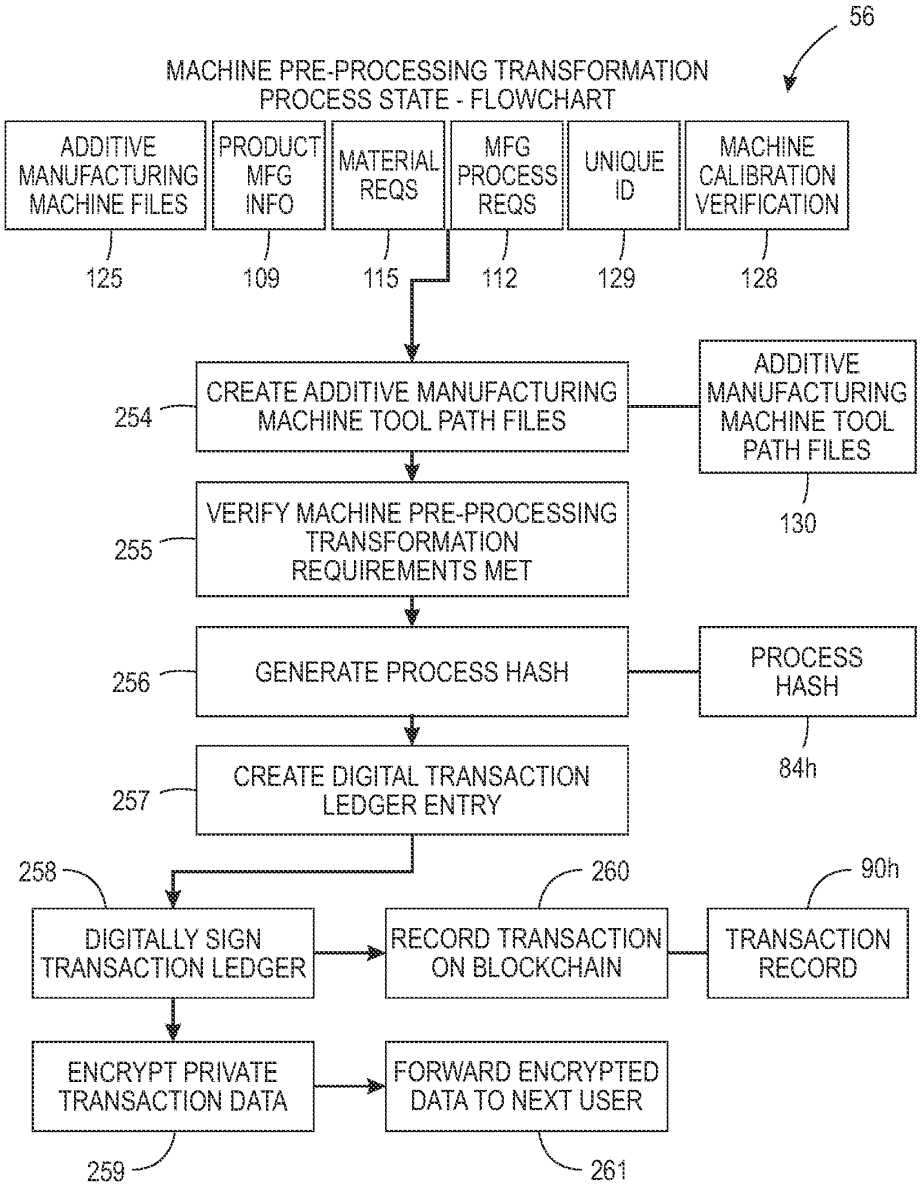
56
MACHINE PRE-PROCESSING TRANSFORMATION PROCESS STATE - FLOWCHART
ADDITIVE MANUFACTURING MACHINE FILES
PRODUCT MFG INFO
MATERIAL REQS
MFG PROCESS REQS
UNIQUE ID
MACHINE CALIBRATION VERIFICATION
125
109
115
112
129
128
254
CREATE ADDITIVE MANUFACTURING MACHINE TOOL PATH FILES
ADDITIVE MANUFACTURING MACHINE TOOL PATH FILES
130
255
VERIFY MACHINE PRE-PROCESSING TRANSFORMATION REQUIREMENTS MET
256
GENERATE PROCESS HASH
PROCESS HASH
84h
257
CREATE DIGITAL TRANSACTION LEDGER ENTRY
258
260
90h
DIGITALLY SIGN TRANSACTION LEDGER
RECORD TRANSACTION ON BLOCKCHAIN
TRANSACTION RECORD
ENCRYPT PRIVATE TRANSACTION DATA
FORWARD ENCRYPTED DATA TO NEXT USER
259
261

FIG. 17

POWDER INSPECTION PROCESS STATE - I/O DATABASE

PROCESS STATE	INPUT/OUTPUT	DESCRIPTION
6	DESCRIPTION	POWDER INSPECTION PROCESS 55
6	INPUT	NEW POWDER 122
6	INPUT	USED POWDER 123
6	OUTPUT	INSPECTED POWDER 126

FIG. 18

MACHINE PRE-PROCESSING TRANSFORMATION
PROCESS STATE - I/O DATABASE

PROCESS STATE	INPUT/OUTPUT	DESCRIPTION
9	DESCRIPTION	MACHINE PRE-PROCESSOR TRANSFORMATION 56
9	INPUT	STL FILE, AMF FILE, EQUIVALENT OTHER 125
9	INPUT	PRODUCT MANUFACTURING INFORMATION 109
9	INPUT	MATERIAL REQUIREMENT (COMPOSITION) 115
9	INPUT	MANUFACTURING PROCESS REQUIREMENTS (WHAT MACHINE MODEL) 112
9	INPUT	2D OR 3D BAR CODE OR PART GLYPH 129
9	OUTPUT	MACHINE TOOL PATH FILE 130

FIG. 19

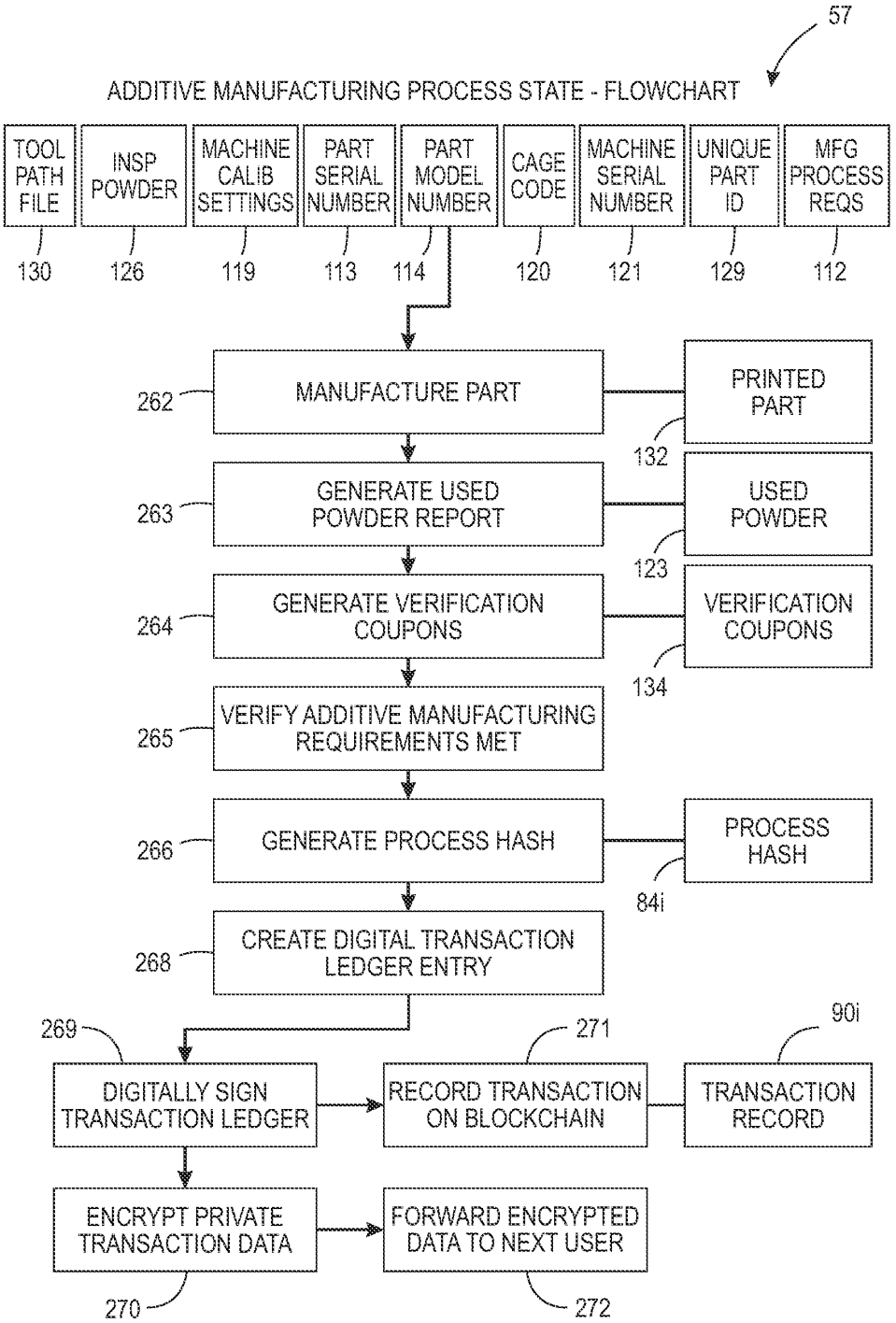
57
ADDITIVE MANUFACTURING PROCESS STATE - FLOWCHART
TOOL PATH FILE
INSP POWDER
MACHINE CALIB SETTINGS
PART SERIAL NUMBER
PART MODEL NUMBER
CAGE CODE
MACHINE SERIAL NUMBER
UNIQUE PART ID
MFG PROCESS REQS
130
126
119
113
114
120
121
129
112
262
MANUFACTURE PART
PRINTED PART
132
263
GENERATE USED POWDER REPORT
USED POWDER
123
264
GENERATE VERIFICATION COUPONS
VERIFICATION COUPONS
134
265
VERIFY ADDITIVE MANUFACTURING REQUIREMENTS MET
266
GENERATE PROCESS HASH
PROCESS HASH
84i
268
CREATE DIGITAL TRANSACTION LEDGER ENTRY
269
271
90i
DIGITALLY SIGN TRANSACTION LEDGER
RECORD TRANSACTION ON BLOCKCHAIN
TRANSACTION RECORD
ENCRYPT PRIVATE TRANSACTION DATA
FORWARD ENCRYPTED DATA TO NEXT USER
270
272

FIG. 20

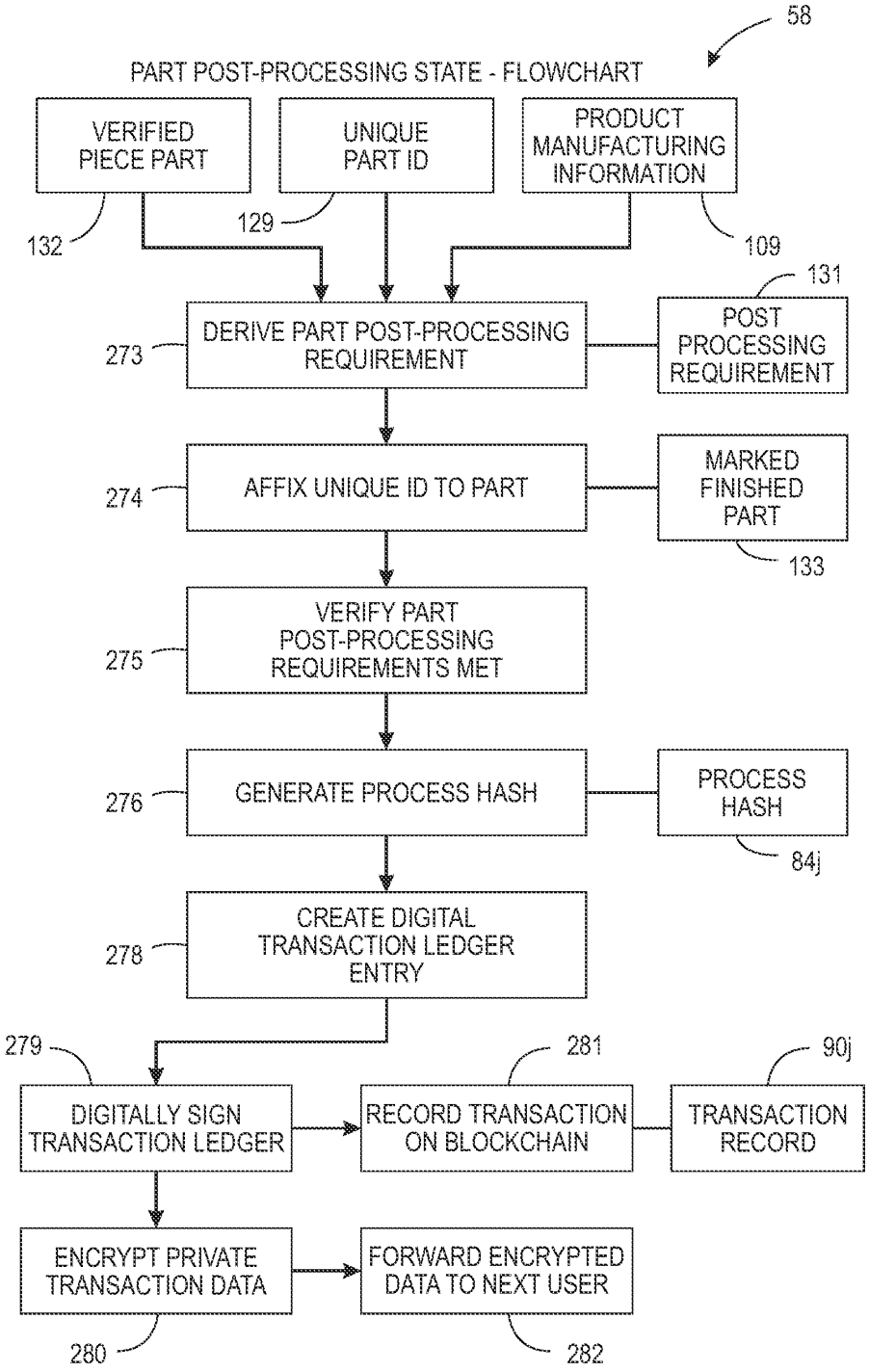
58
PART POST-PROCESSING STATE - FLOWCHART
VERIFIED PIECE PART
UNIQUE PART ID
PRODUCT MANUFACTURING INFORMATION
132
129
109
131
273
DERIVE PART POST-PROCESSING REQUIREMENT
POST PROCESSING REQUIREMENT
274
AFFIX UNIQUE ID TO PART
MARKED FINISHED PART
133
275
VERIFY PART POST-PROCESSING REQUIREMENTS MET
276
GENERATE PROCESS HASH
PROCESS HASH
84j
278
CREATE DIGITAL TRANSACTION LEDGER ENTRY
279
281
90j
DIGITALLY SIGN TRANSACTION LEDGER
RECORD TRANSACTION ON BLOCKCHAIN
TRANSACTION RECORD
ENCRYPT PRIVATE TRANSACTION DATA
FORWARD ENCRYPTED DATA TO NEXT USER
280
282

FIG. 21

ADDITIVE MANUFACTURING PROCESS STATE - I/O DATABASE

PROCESS STATE	INPUT/OUTPUT	DESCRIPTION
10	DESCRIPTION	LPBM PRINT 57
10	INPUT	MACHINE TOOL PATH FILE 130
10	INPUT	INSPECTED POWDER 126
10	INPUT	MACHINE CALIBRATION SETTINGS 119
10	INPUT	PART SERIAL NUMBER 113
10	INPUT	PART NUMBER 114
10	INPUT	MANUFACTURER CAGE CODE 120
10	INPUT	MANUFACTURING PROCESS REQUIREMENTS (WHAT MACHINE MODEL) 112
10	INPUT	MACHINE SERIAL NUMBER USED FOR MANUFACTURE 121
10	INPUT	2D OR 3D BAR CODE OR PART GLYPH 129
10	OUTPUT	PIECE PART 132
10	OUTPUT	USED POWDER 123
10	OUTPUT	VERIFICATION COUPONS 134

FIG. 22

PART POST PROCESSING PROCESS STATE - I/O DATABASE

PROCESS STATE	INPUT/OUTPUT	DESCRIPTION
11	DESCRIPTION	PART POST PROCESSING 58
11	INPUT	PIECE PART 132
11	INPUT	PRODUCT MANUFACTURING INFORMATION 109
11	OUTPUT	POST PROCESSED (FINISHED) PART 133

FIG. 23

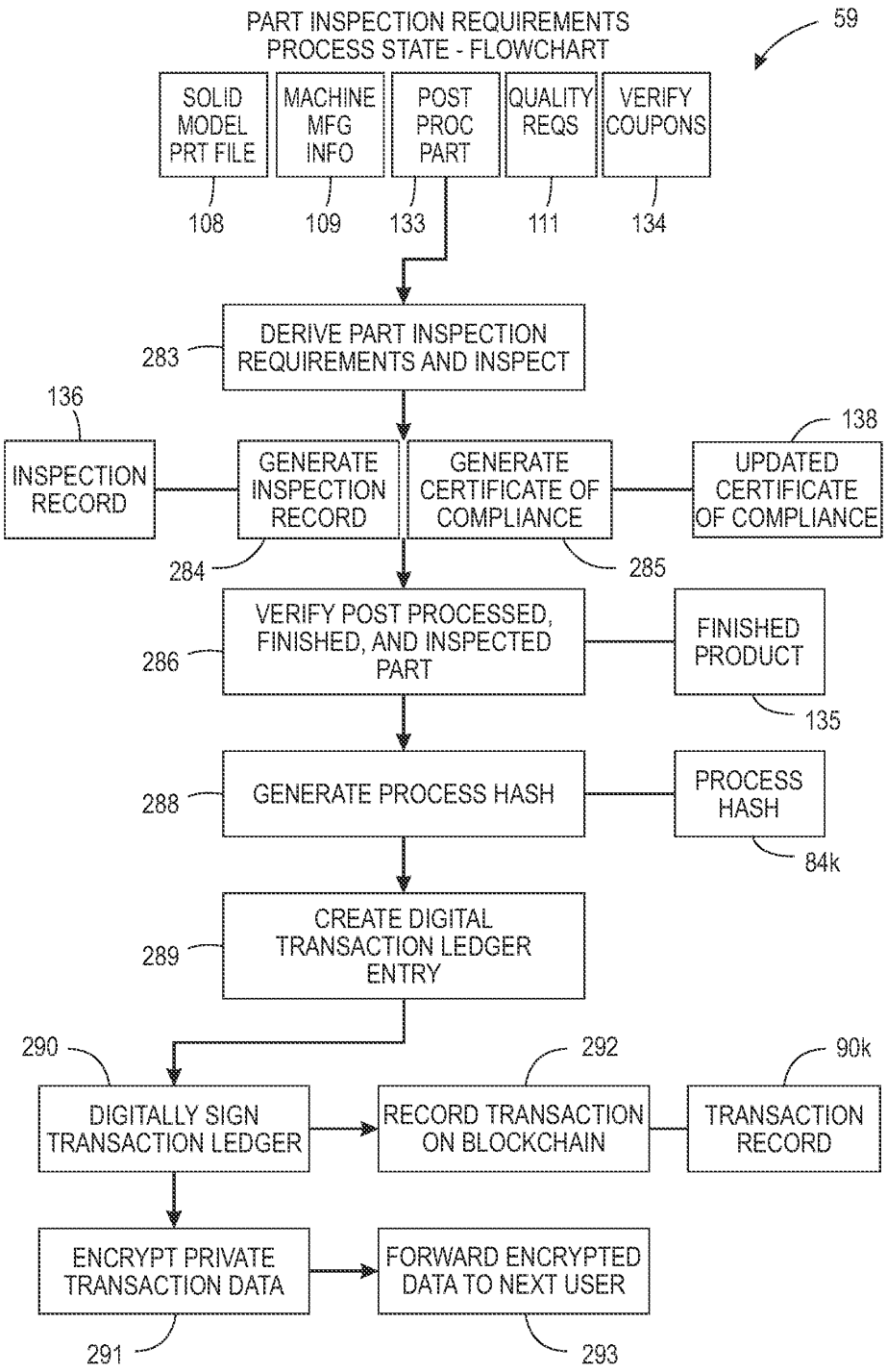
PART INSPECTION REQUIREMENTS
PROCESS STATE - FLOWCHART
59
SOLID MODEL PRT FILE
MACHINE MFG INFO
POST PROC PART
QUALITY REQS
VERIFY COUPONS
108
109
133
111
134
DERIVE PART INSPECTION REQUIREMENTS AND INSPECT
283
136
INSPECTION RECORD
GENERATE INSPECTION RECORD
GENERATE CERTIFICATE OF COMPLIANCE
138
UPDATED CERTIFICATE OF COMPLIANCE
284
285
VERIFY POST PROCESSED, FINISHED, AND INSPECTED PART
286
FINISHED PRODUCT
135
GENERATE PROCESS HASH
288
PROCESS HASH
84k
CREATE DIGITAL TRANSACTION LEDGER ENTRY
289
290
292
90k
DIGITALLY SIGN TRANSACTION LEDGER
RECORD TRANSACTION ON BLOCKCHAIN
TRANSACTION RECORD
ENCRYPT PRIVATE TRANSACTION DATA
FORWARD ENCRYPTED DATA TO NEXT USER
291
293

FIG. 24

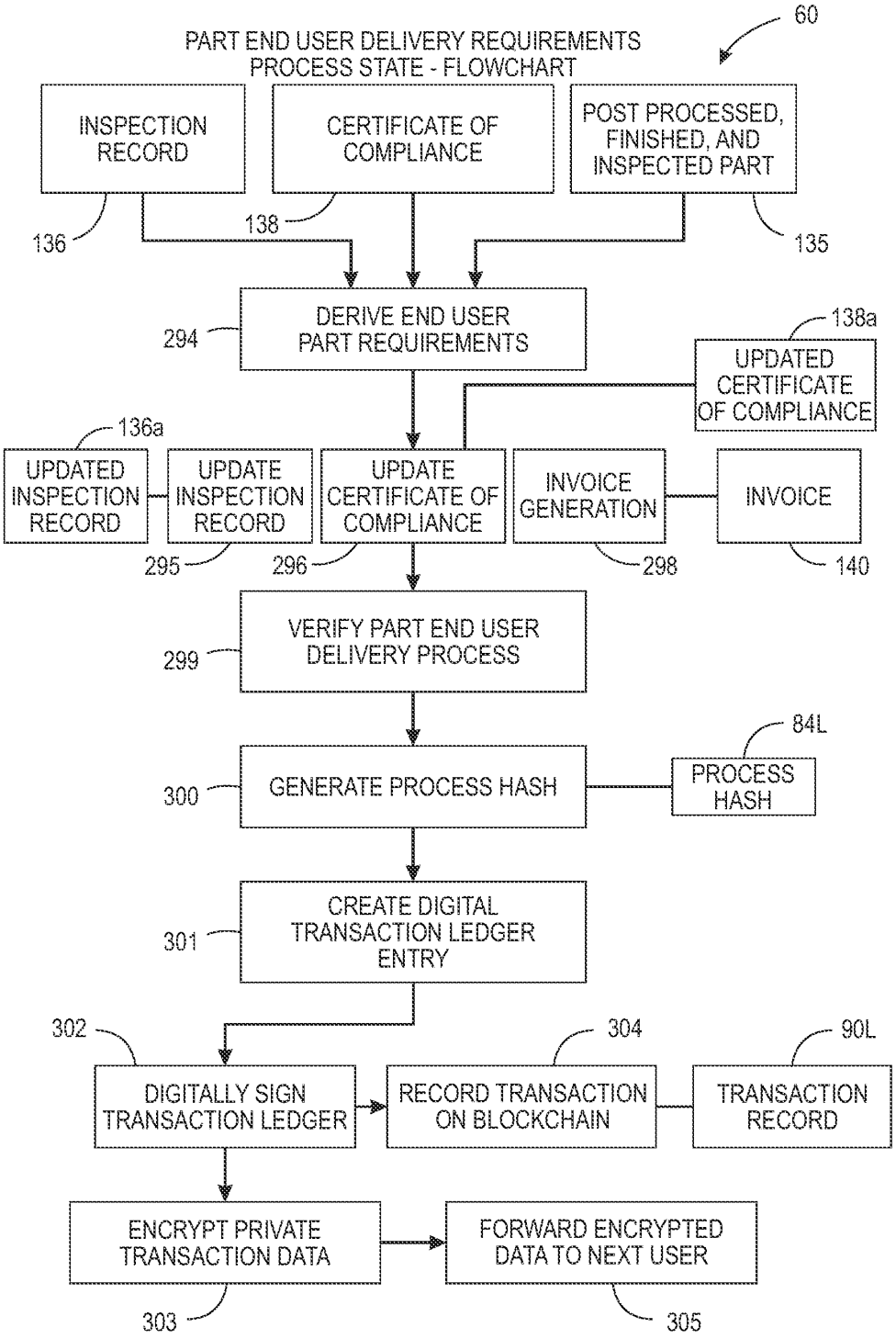
PART END USER DELIVERY REQUIREMENTS PROCESS STATE - FLOWCHART
60
INSPECTION RECORD
CERTIFICATE OF COMPLIANCE
POST PROCESSED, FINISHED, AND INSPECTED PART
136
138
135
294
DERIVE END USER PART REQUIREMENTS
138a
UPDATED CERTIFICATE OF COMPLIANCE
136a
UPDATED INSPECTION RECORD
UPDATE INSPECTION RECORD
UPDATE CERTIFICATE OF COMPLIANCE
INVOICE GENERATION
INVOICE
295
296
298
140
299
VERIFY PART END USER DELIVERY PROCESS
84L
300
GENERATE PROCESS HASH
PROCESS HASH
301
CREATE DIGITAL TRANSACTION LEDGER ENTRY
302
304
90L
DIGITALLY SIGN TRANSACTION LEDGER
RECORD TRANSACTION ON BLOCKCHAIN
TRANSACTION RECORD
ENCRYPT PRIVATE TRANSACTION DATA
FORWARD ENCRYPTED DATA TO NEXT USER
303
305

FIG. 25

PART INSPECTION PROCESS STATE - I/O DATABASE

PROCESS STATE	INPUT/OUTPUT	DESCRIPTION
12	DESCRIPTION	PART POST INSPECTION 59
12	INPUT	POST PROCESSED (FINISHED) PART 133
12	INPUT	SOLID MODEL (PRT FILE) - GEOMETRY DEFINITION 108
12	INPUT	PRODUCT MANUFACTURING INFORMATION 109
12	INPUT	QUALITY REQUIREMENT 111
12	INPUT	VERIFICATION COUPONS 134
12	OUTPUT	POST PROCESSED, FINISHED AND INSPECTED PART 135
12	OUTPUT	INSPECTION RECORD 136
12	OUTPUT	CERTIFICATION OF COMPLIANCE 138

FIG. 26

PART END USER DELIVERY PROCESS STATE - I/O DATABASE

PROCESS STATE	INPUT/OUTPUT	DESCRIPTION
13	DESCRIPTION	PART END USER DELIVERY 60
13	INPUT	POST PROCESSED, FINISHED AND INSPECTED PART 135
13	INPUT	INSPECTION RECORD 136
13	INPUT	CERTIFICATION OF COMPLIANCE 138
13	OUTPUT	POST PROCESSED, FINISHED AND INSPECTED PART 135
13	OUTPUT	INSPECTION RECORD 136a
13	OUTPUT	CERTIFICATION OF COMPLIANCE 138a
13	INPUT	CERTIFICATION OF AUTHENTICITY 139
13	OUTPUT	2D OR 3D BAR CODE OR PART GLYPH 129
13	OUTPUT	INVOICE 140

FIG. 27

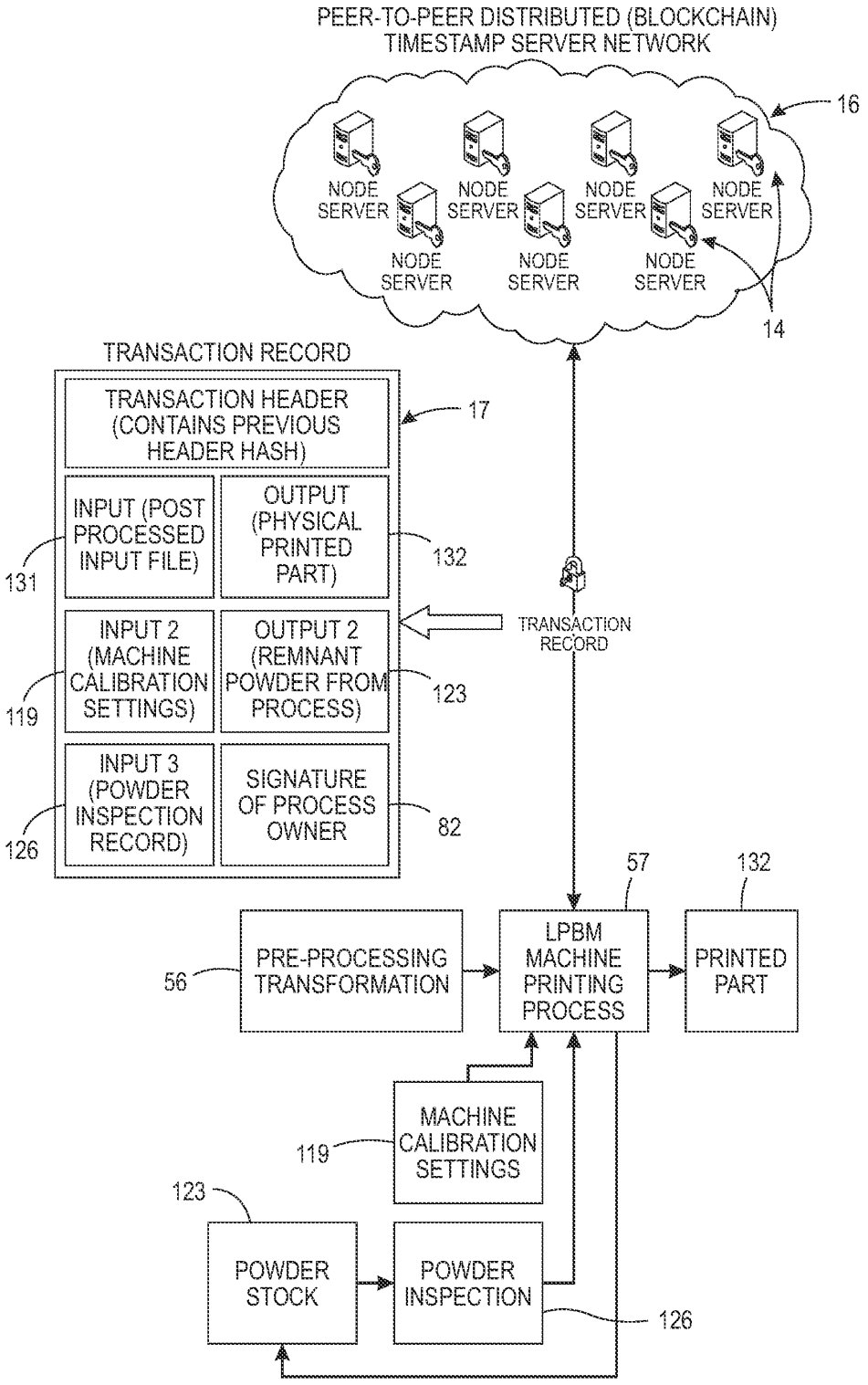
PEER-TO-PEER DISTRIBUTED (BLOCKCHAIN)
TIMESTAMP SERVER NETWORK
16
NODE SERVER
NODE SERVER
NODE SERVER
NODE SERVER
NODE SERVER
NODE SERVER
NODE SERVER
14
TRANSACTION RECORD
TRANSACTION HEADER (CONTAINS PREVIOUS HEADER HASH)
17
INPUT (POST PROCESSED INPUT FILE)
131
OUTPUT (PHYSICAL PRINTED PART)
132
INPUT 2 (MACHINE CALIBRATION SETTINGS)
119
OUTPUT 2 (REMNANT POWDER FROM PROCESS)
123
INPUT 3 (POWDER INSPECTION RECORD)
126
SIGNATURE OF PROCESS OWNER
82
TRANSACTION RECORD
57
132
56
PRE-PROCESSING TRANSFORMATION
LPBM MACHINE PRINTING PROCESS
PRINTED PART
119
MACHINE CALIBRATION SETTINGS
123
POWDER STOCK
POWDER INSPECTION
126

FIG. 28

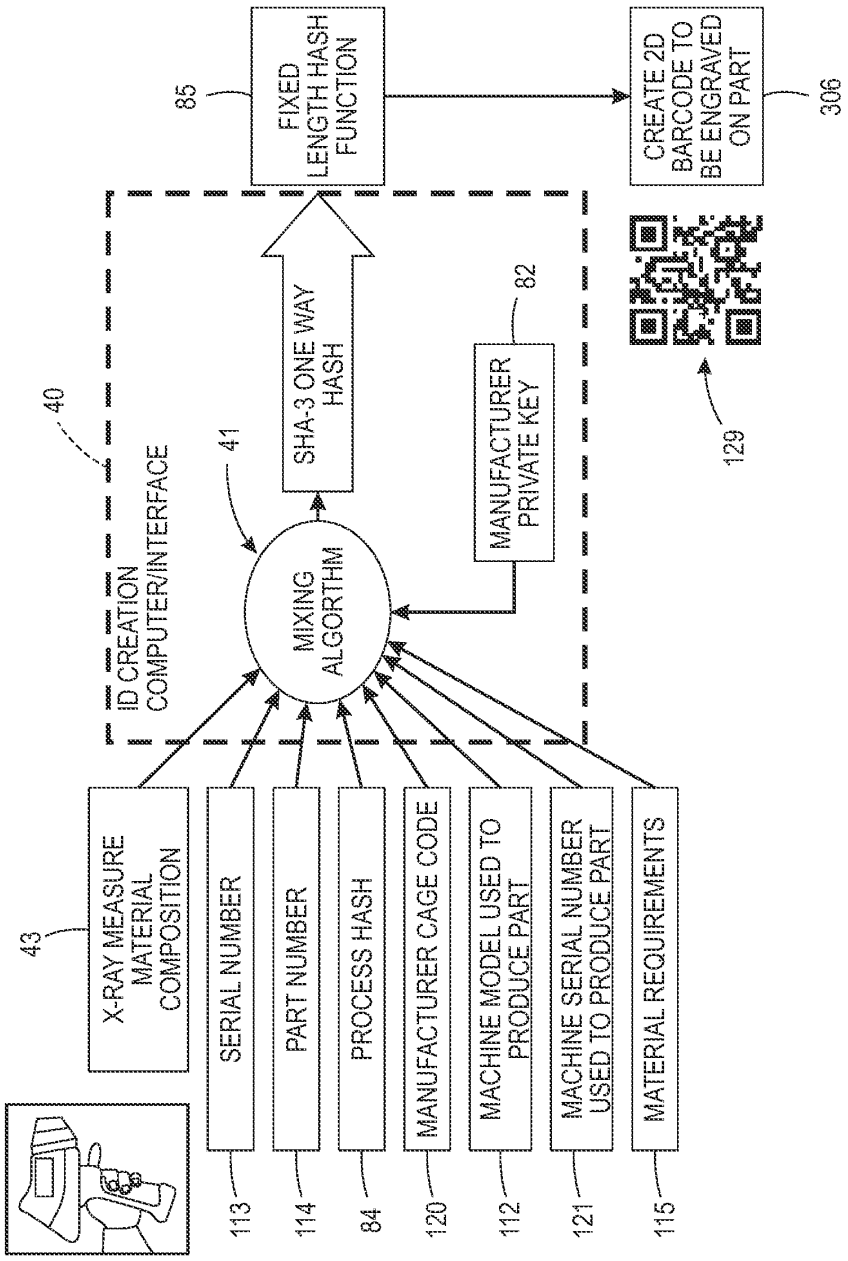
43
X-RAY MEASURE MATERIAL COMPOSITION
SERIAL NUMBER
PART NUMBER
PROCESS HASH
MANUFACTURER CAGE CODE
MACHINE MODEL USED TO PRODUCE PART
MACHINE SERIAL NUMBER USED TO PRODUCE PART
MATERIAL REQUIREMENTS
113
114
84
120
112
121
115
40
ID CREATION COMPUTER/INTERFACE
41
MIXING ALGORTHM
SHA-3 ONE WAY HASH
85
FIXED LENGTH HASH FUNCTION
82
MANUFACTURER PRIVATE KEY
129
CREATE 2D BARCODE TO BE ENGRAVED ON PART
306

FIG. 29

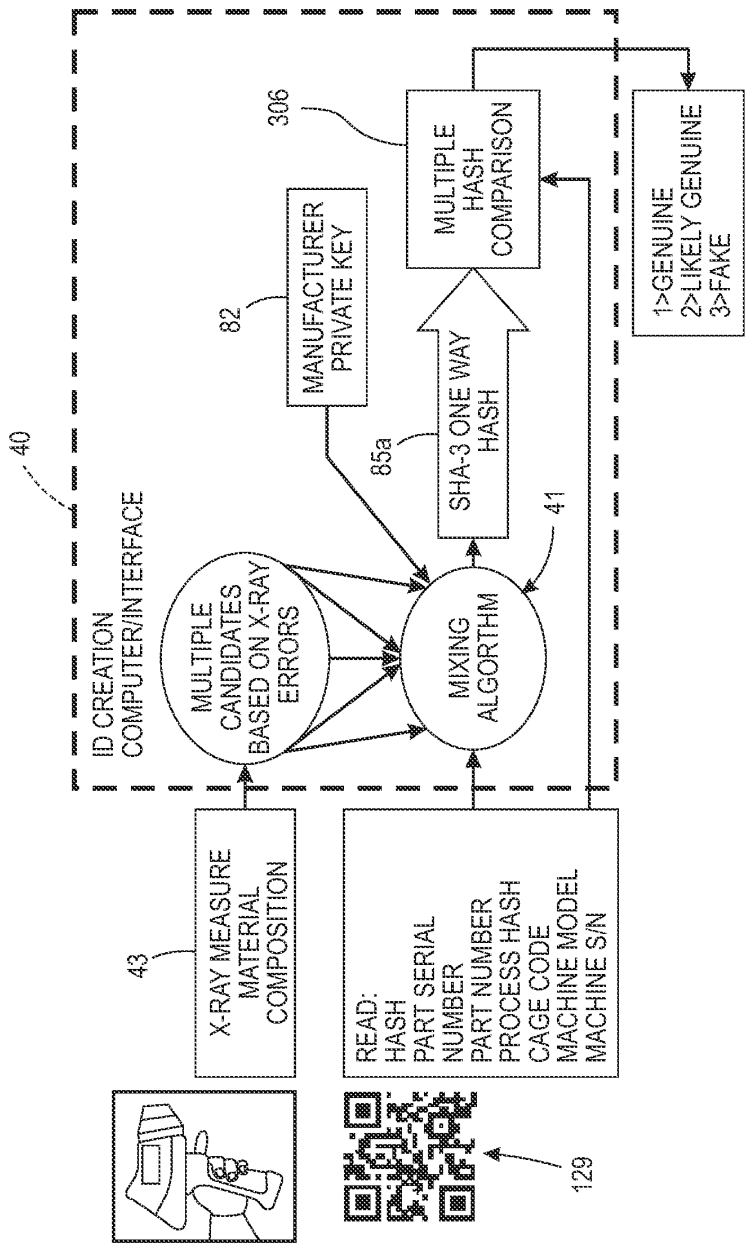
40
ID CREATION COMPUTER/INTERFACE
43
X-RAY MEASURE MATERIAL COMPOSITION
READ:
HASH
PART SERIAL NUMBER
PART NUMBER
PROCESS HASH
CAGE CODE
MACHINE MODEL
MACHINE S/N
129
MULTIPLE CANDIDATES BASED ON X-RAY ERRORS
MIXING ALGORTHM
41
82
MANUFACTURER PRIVATE KEY
85a
SHA-3 ONE WAY HASH
306
MULTIPLE HASH COMPARISON
1>GENUINE
2>LIKELY GENUINE
3>FAKE

FIG. 30

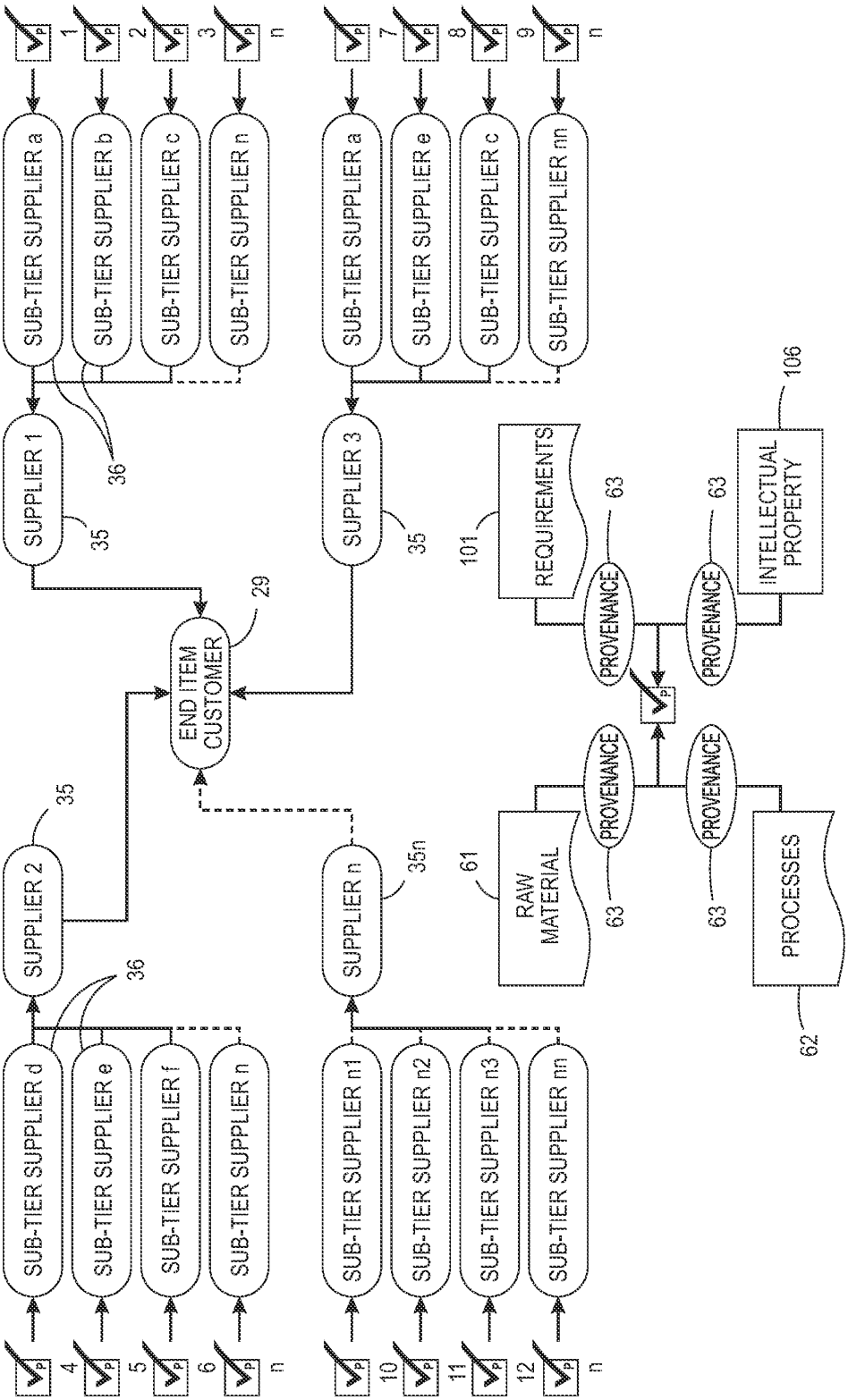
SUB-TIER SUPPLIER a
SUB-TIER SUPPLIER b
SUB-TIER SUPPLIER c
SUB-TIER SUPPLIER n
SUB-TIER SUPPLIER a
SUB-TIER SUPPLIER e
SUB-TIER SUPPLIER c
SUB-TIER SUPPLIER nn
SUPPLIER 1
SUPPLIER 3
END ITEM CUSTOMER
SUPPLIER 2
SUPPLIER n
SUB-TIER SUPPLIER d
SUB-TIER SUPPLIER e
SUB-TIER SUPPLIER f
SUB-TIER SUPPLIER n
SUB-TIER SUPPLIER n1
SUB-TIER SUPPLIER n2
SUB-TIER SUPPLIER n3
SUB-TIER SUPPLIER nn
REQUIREMENTS
PROVENANCE
INTELLECTUAL PROPERTY
RAW MATERIAL
PROCESSES
35
36
29
101
106
61
62
63

FIG. 31

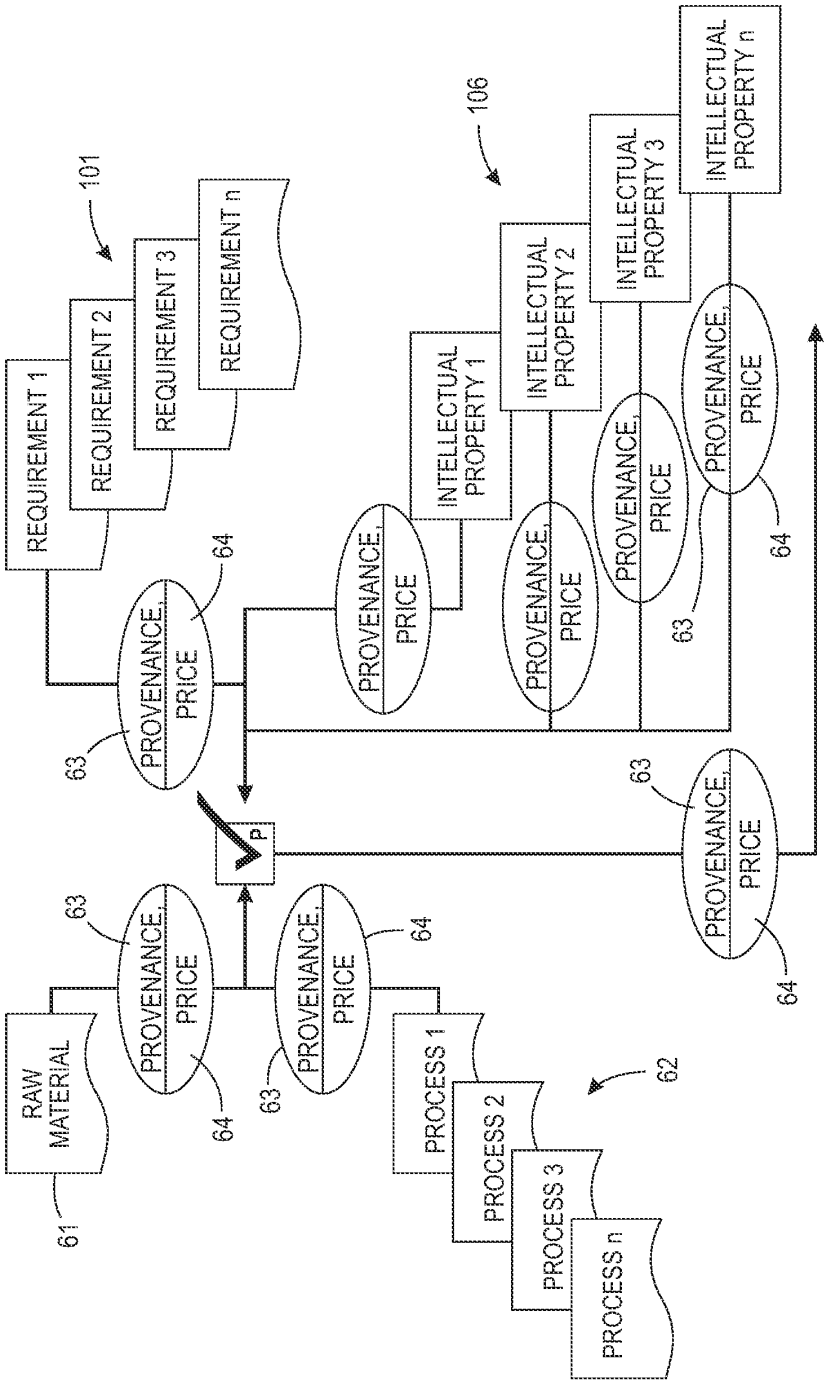
101
REQUIREMENT 1
REQUIREMENT 2
REQUIREMENT 3
REQUIREMENT n
106
INTELLECTUAL PROPERTY 1
INTELLECTUAL PROPERTY 2
INTELLECTUAL PROPERTY 3
INTELLECTUAL PROPERTY n
PROVENANCE, PRICE
63
64
P
RAW MATERIAL
61
62
PROCESS 1
PROCESS 2
PROCESS 3
PROCESS n

FIG. 32

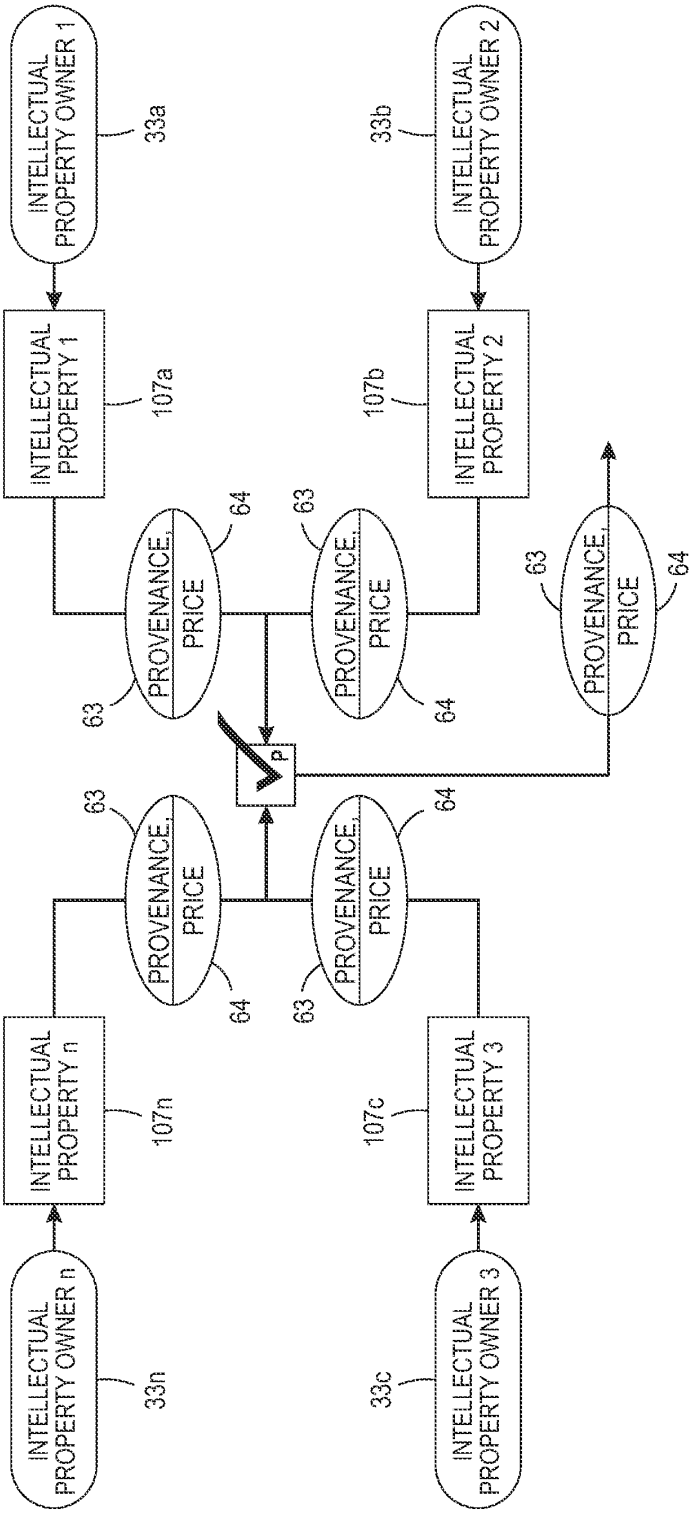
INTELLECTUAL PROPERTY OWNER 1
33a
INTELLECTUAL PROPERTY OWNER 2
33b
INTELLECTUAL PROPERTY OWNER n
33n
INTELLECTUAL PROPERTY OWNER 3
33c
INTELLECTUAL PROPERTY 1
107a
INTELLECTUAL PROPERTY 2
107b
INTELLECTUAL PROPERTY n
107n
INTELLECTUAL PROPERTY 3
107c
PROVENANCE, PRICE
63
64
P

FIG. 33

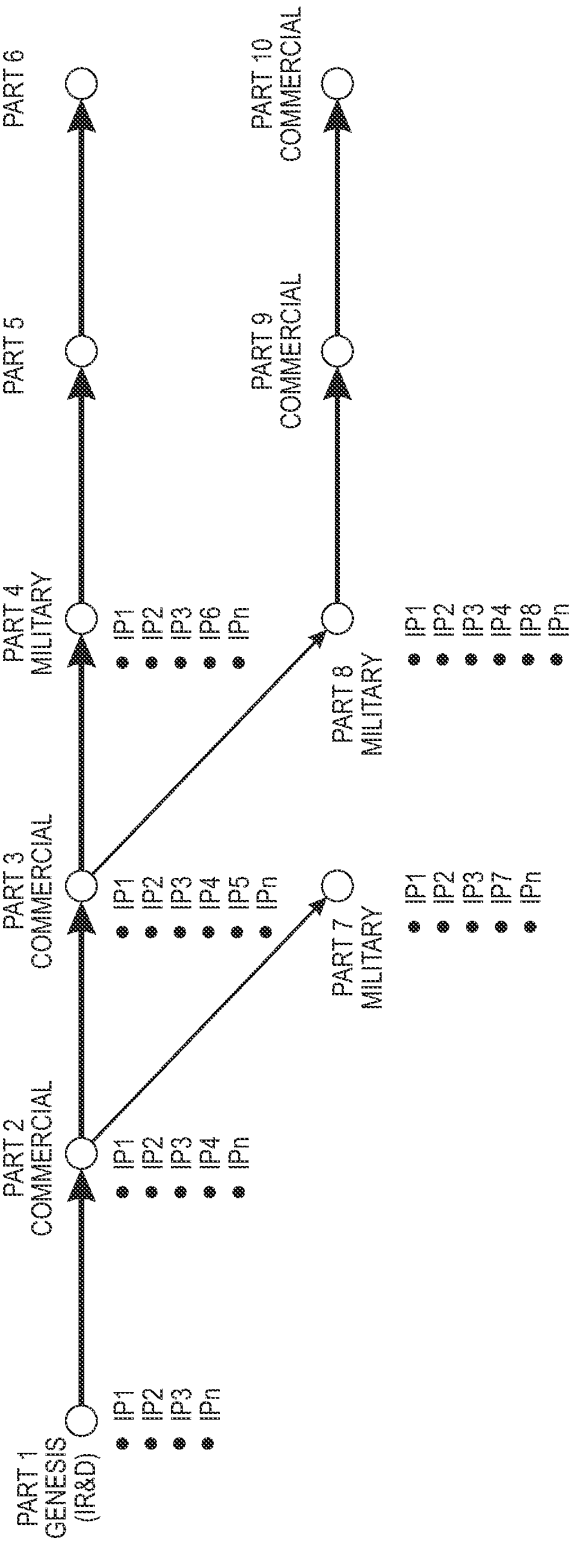
PART 1
GENESIS
(IR&D)
IP1
IP2
IP3
IPn
PART 2
COMMERCIAL
IP1
IP2
IP3
IP4
IPn
PART 3
COMMERCIAL
IP1
IP2
IP3
IP4
IP5
IPn
PART 4
MILITARY
IP1
IP2
IP3
IP6
IPn
PART 5
PART 6
PART 7
MILITARY
IP1
IP2
IP3
IP7
IPn
PART 8
MILITARY
IP1
IP2
IP3
IP4
IP8
IPn
PART 9
COMMERCIAL
PART 10
COMMERCIAL

FIG. 34

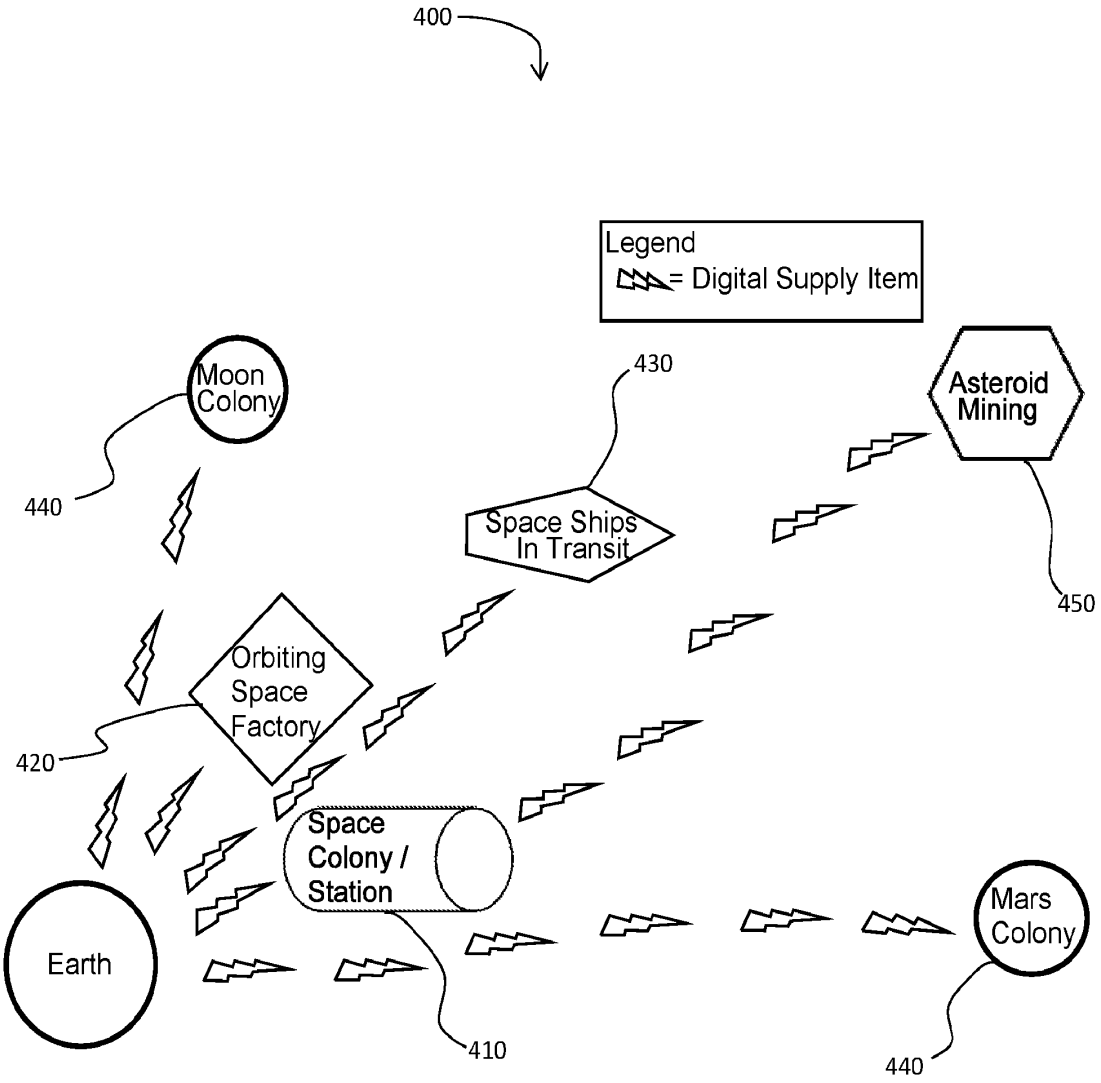
400
Legend
= Digital Supply Item
Moon Colony
440
430
Space Ships In Transit
Asteroid Mining
450
Orbiting Space Factory
420
Space Colony / Station
410
Earth
Mars Colony
440

FIG. 35

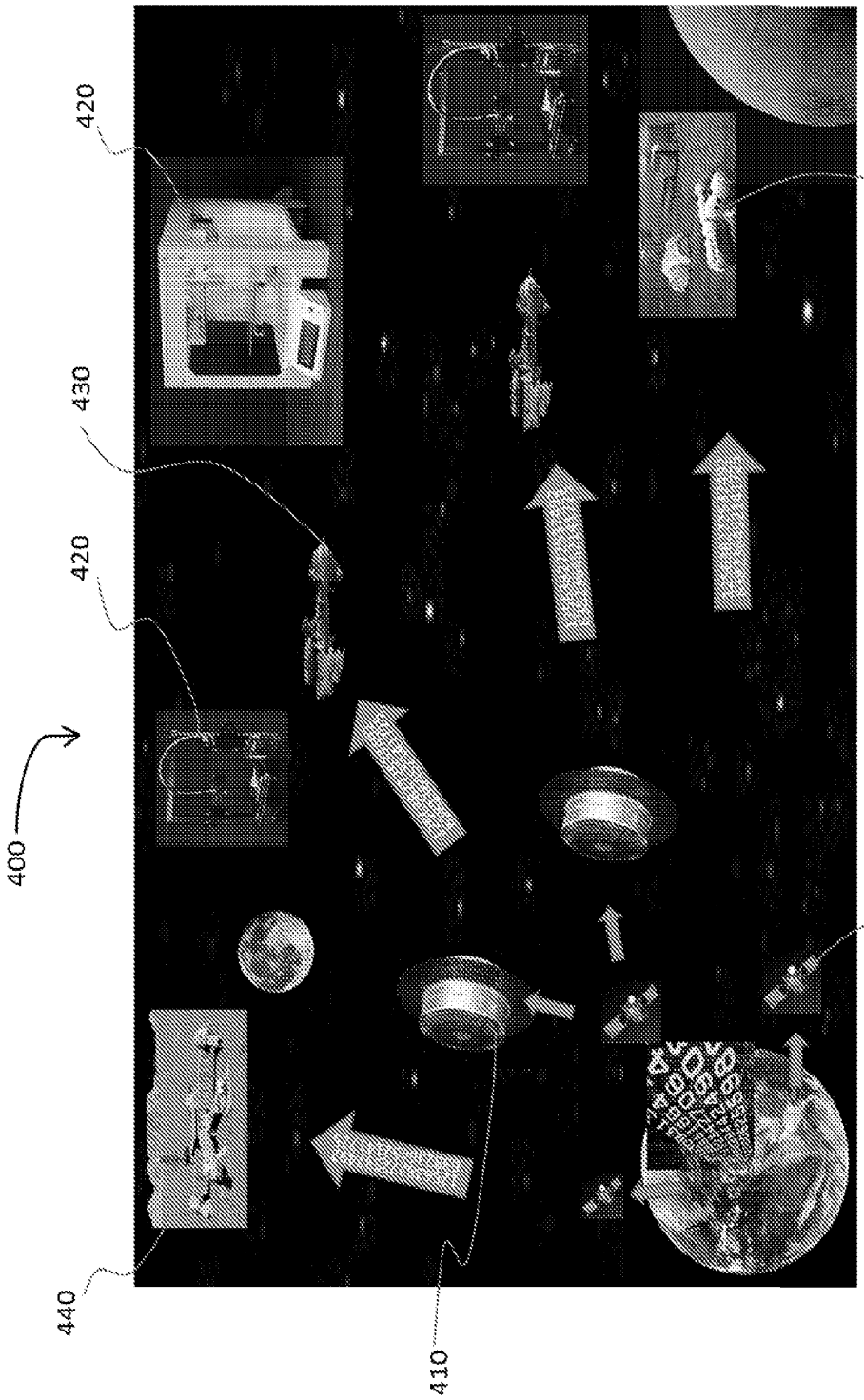

FIG. 36

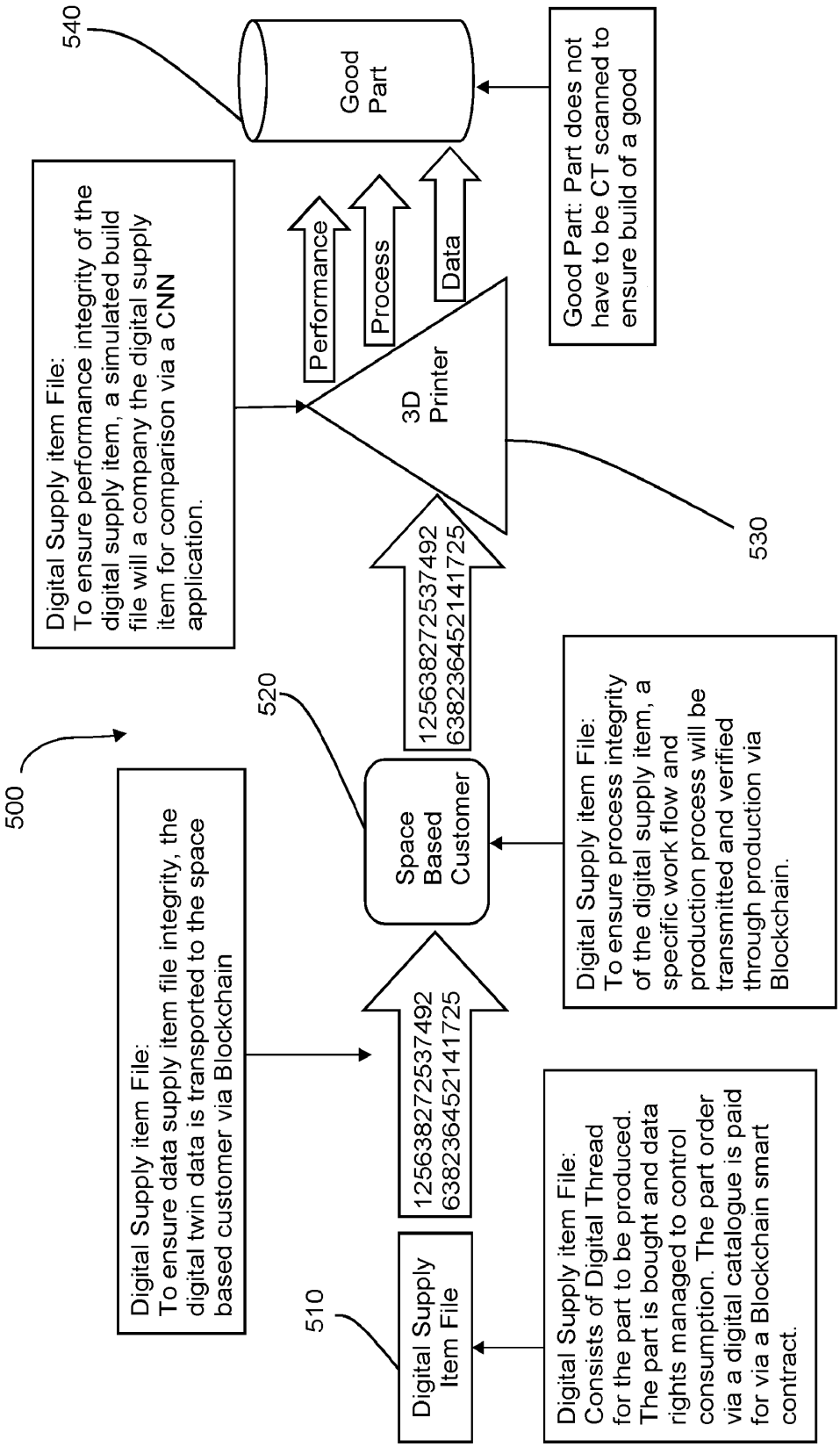
500
510
Digital Supply Item File
Digital Supply item File:
Consists of Digital Thread for the part to be produced. The part is bought and data rights managed to control consumption. The part order via a digital catalogue is paid for via a Blockchain smart contract.
Digital Supply item File:
To ensure data supply item file integrity, the digital twin data is transported to the space based customer via Blockchain
12563827253749263823645214172 5
520
Space Based Customer
Digital Supply item File:
To ensure process integrity of the digital supply item, a specific work flow and production process will be transmitted and verified through production via Blockchain.
12563827253749263823645214172 5
530
3D Printer
Performance
Process
Data
Digital Supply item File:
To ensure performance integrity of the digital supply item, a simulated build file will a company the digital supply item for comparison via a CNN application.
540
Good Part
Good Part: Part does not have to be CT scanned to ensure build of a good

FIG. 37

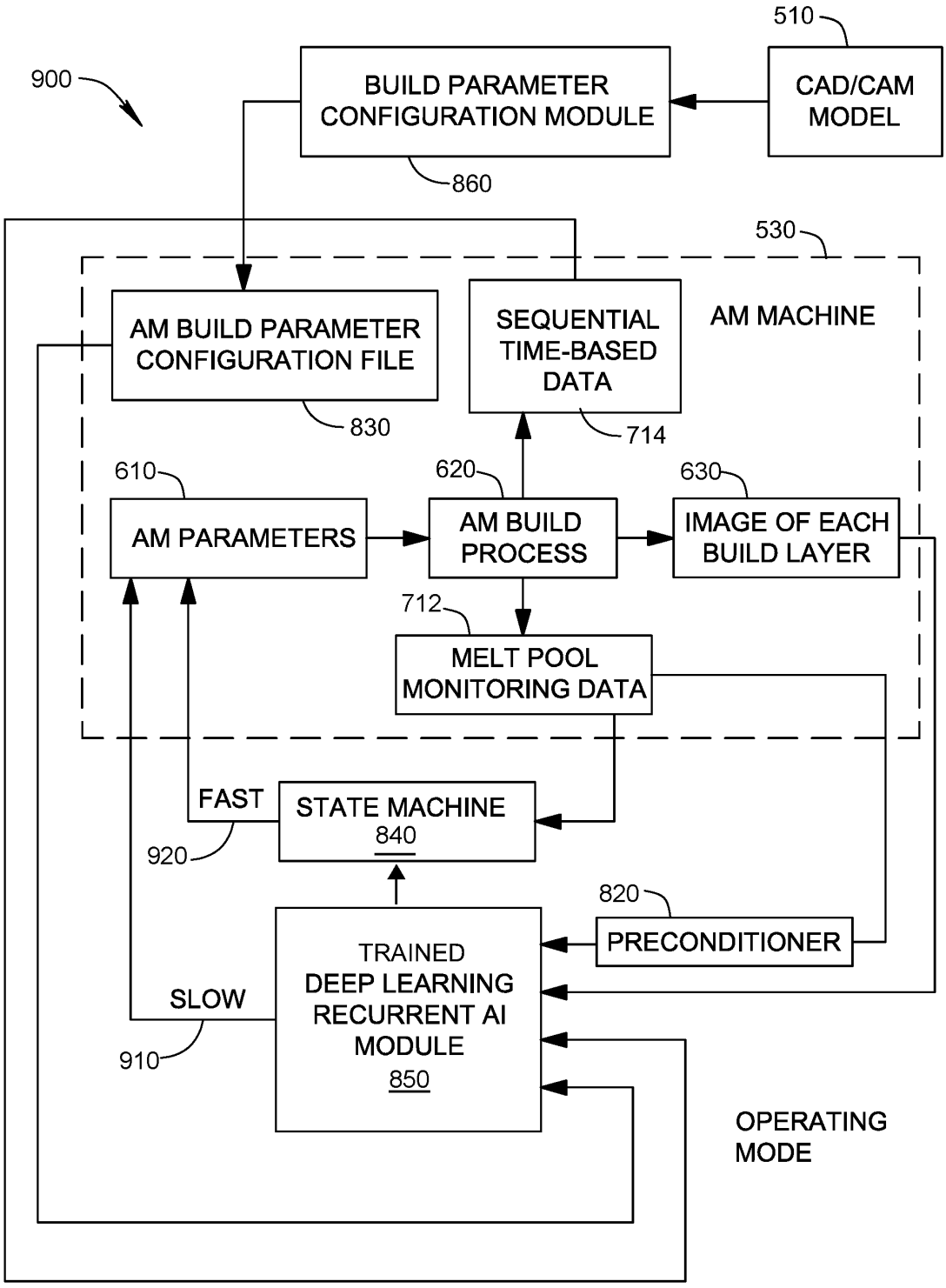
900
510
CAD/CAM MODEL
BUILD PARAMETER CONFIGURATION MODULE
860
530
AM MACHINE
AM BUILD PARAMETER CONFIGURATION FILE
830
SEQUENTIAL TIME-BASED DATA
714
610
AM PARAMETERS
620
AM BUILD PROCESS
630
IMAGE OF EACH BUILD LAYER
712
MELT POOL MONITORING DATA
FAST
920
STATE MACHINE
840
820
PRECONDITIONER
TRAINED DEEP LEARNING RECURRENT AI MODULE
850
SLOW
910
OPERATING MODE

FIG. 38

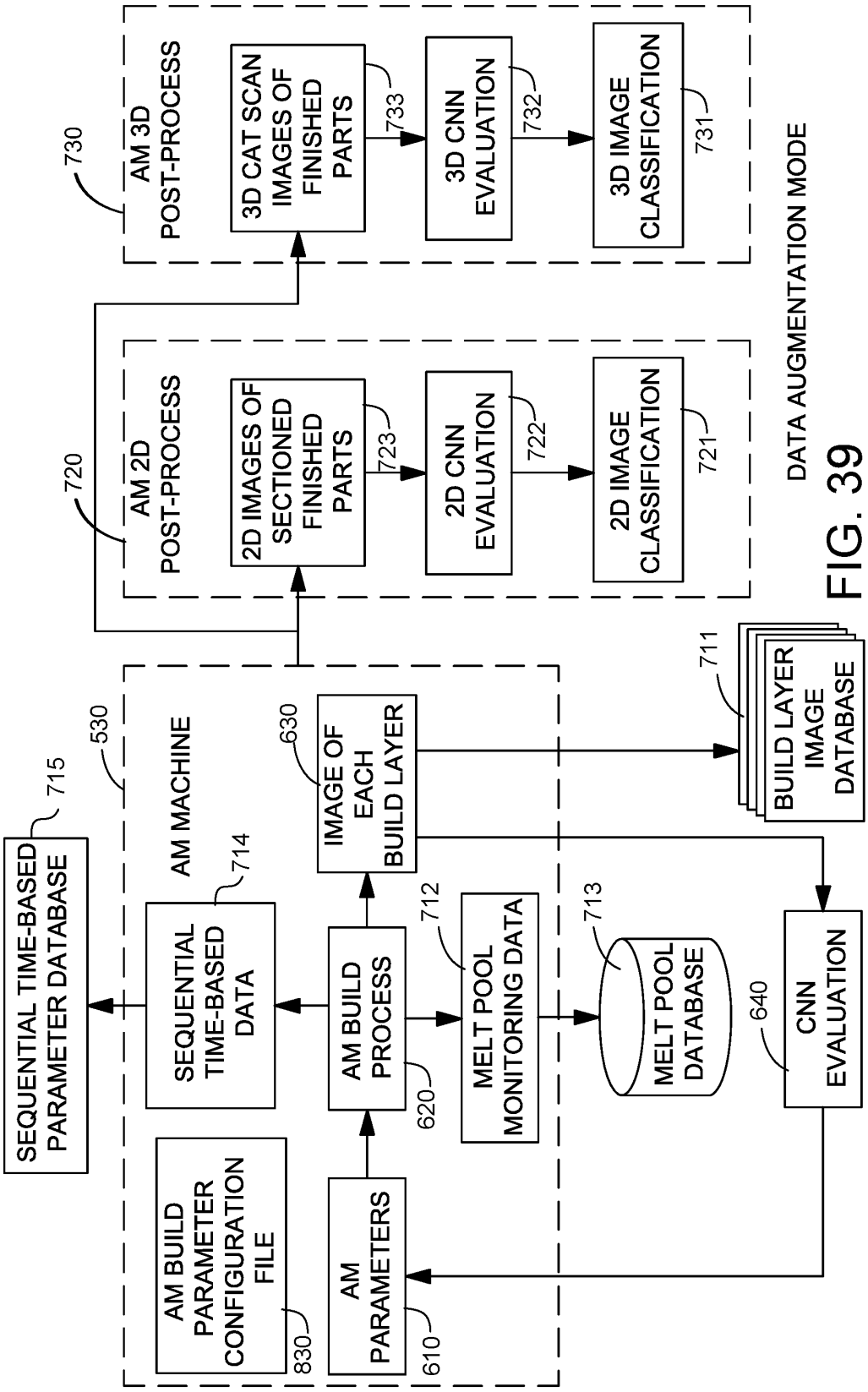
DATA AUGMENTATION MODE
730
AM 3D POST-PROCESS
3D CAT SCAN IMAGES OF FINISHED PARTS
733
3D CNN EVALUATION
732
3D IMAGE CLASSIFICATION
731
720
AM 2D POST-PROCESS
2D IMAGES OF SECTIONED FINISHED PARTS
723
2D CNN EVALUATION
722
2D IMAGE CLASSIFICATION
721
711
BUILD LAYER IMAGE DATABASE
530
AM MACHINE
630
IMAGE OF EACH BUILD LAYER
715
SEQUENTIAL TIME-BASED PARAMETER DATABASE
714
SEQUENTIAL TIME-BASED DATA
712
713
AM BUILD PROCESS
MELT POOL MONITORING DATA
MELT POOL DATABASE
640
CNN EVALUATION
620
AM BUILD PARAMETER CONFIGURATION FILE
AM PARAMETERS
830
610

FIG. 39

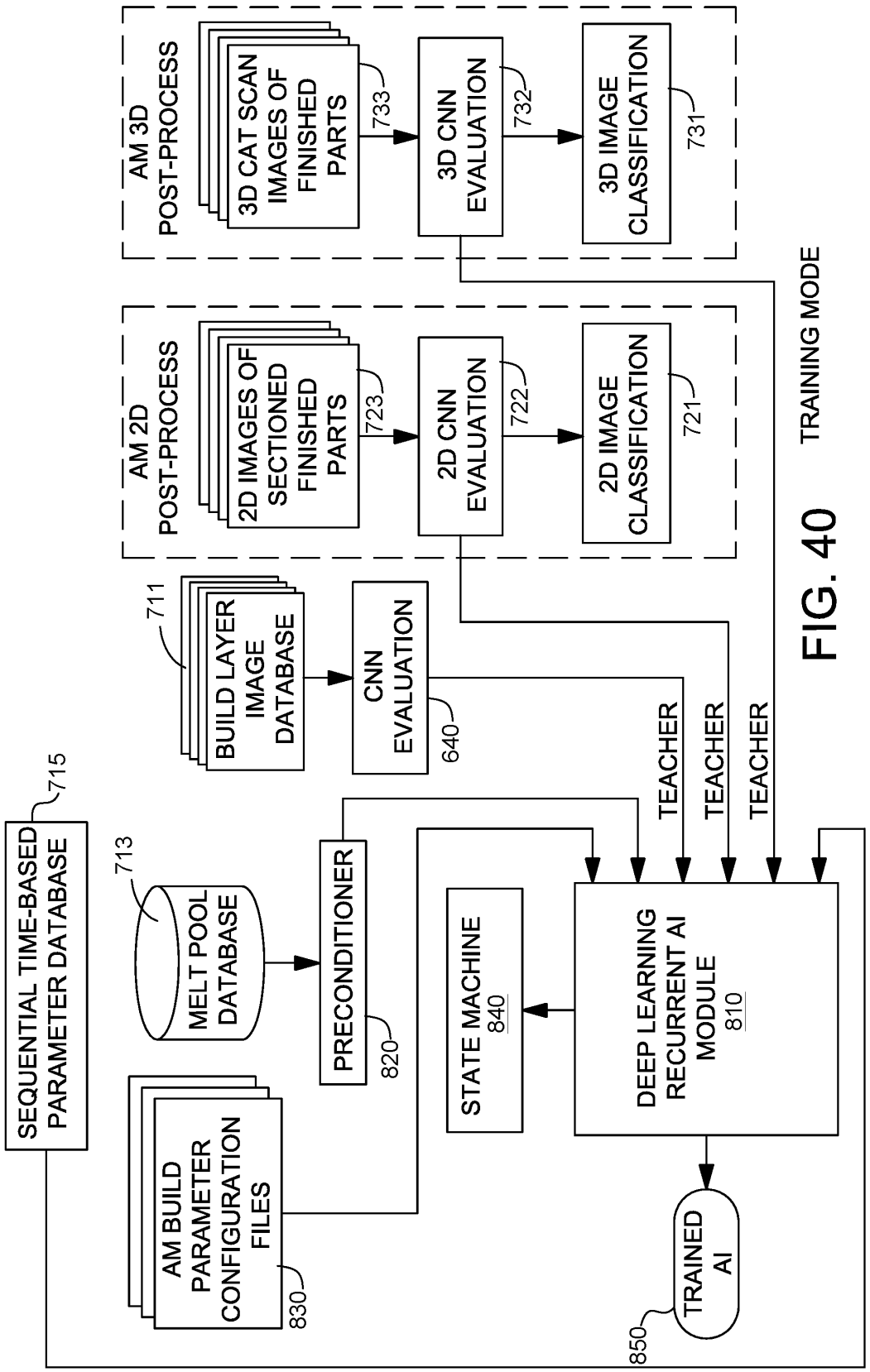
AM 3D POST-PROCESS
3D CAT SCAN IMAGES OF FINISHED PARTS
733
3D CNN EVALUATION
732
3D IMAGE CLASSIFICATION
731
AM 2D POST-PROCESS
2D IMAGES OF SECTIONED FINISHED PARTS
723
2D CNN EVALUATION
722
2D IMAGE CLASSIFICATION
721
TRAINING MODE
711
BUILD LAYER IMAGE DATABASE
CNN EVALUATION
640
TEACHER
TEACHER
TEACHER
715
SEQUENTIAL TIME-BASED PARAMETER DATABASE
713
MELT POOL DATABASE
PRECONDITIONER
820
STATE MACHINE
840
DEEP LEARNING RECURRENT AI MODULE
810
AM BUILD PARAMETER CONFIGURATION FILES
830
TRAINED AI
850

FIG. 40

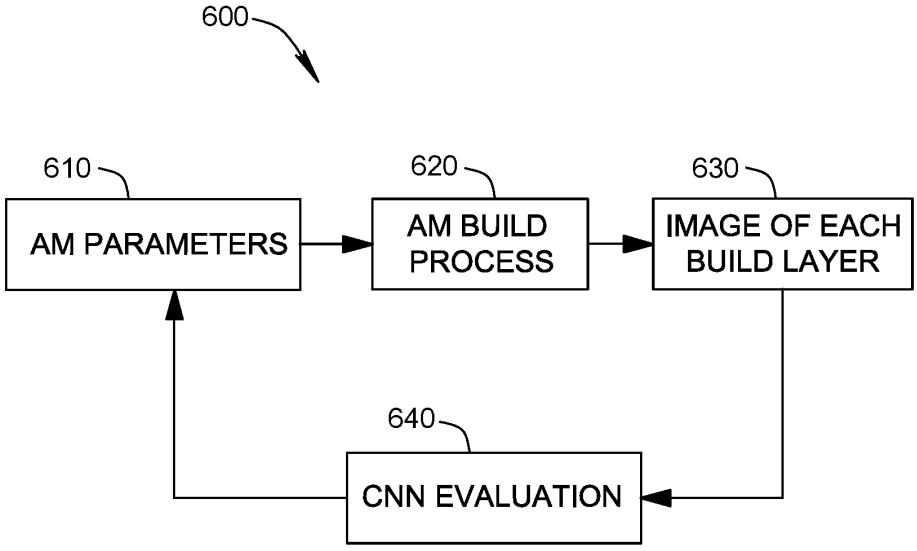
600
610
AM PARAMETERS
620
AM BUILD PROCESS
630
IMAGE OF EACH BUILD LAYER
640
CNN EVALUATION

FIG. 41

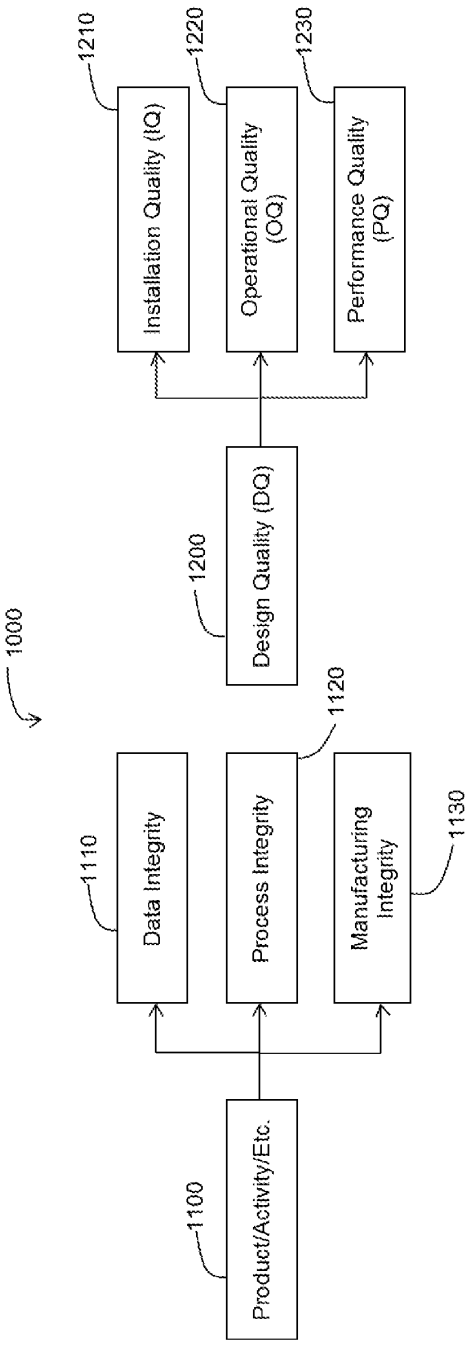
1000
1100
Product/Activity/Etc.
1110
Data Integrity
1120
Process Integrity
1130
Manufacturing Integrity
1200
Design Quality (DQ)
1210
Installation Quality (IQ)
1220
Operational Quality (OQ)
1230
Performance Quality (PQ)

FIG. 42

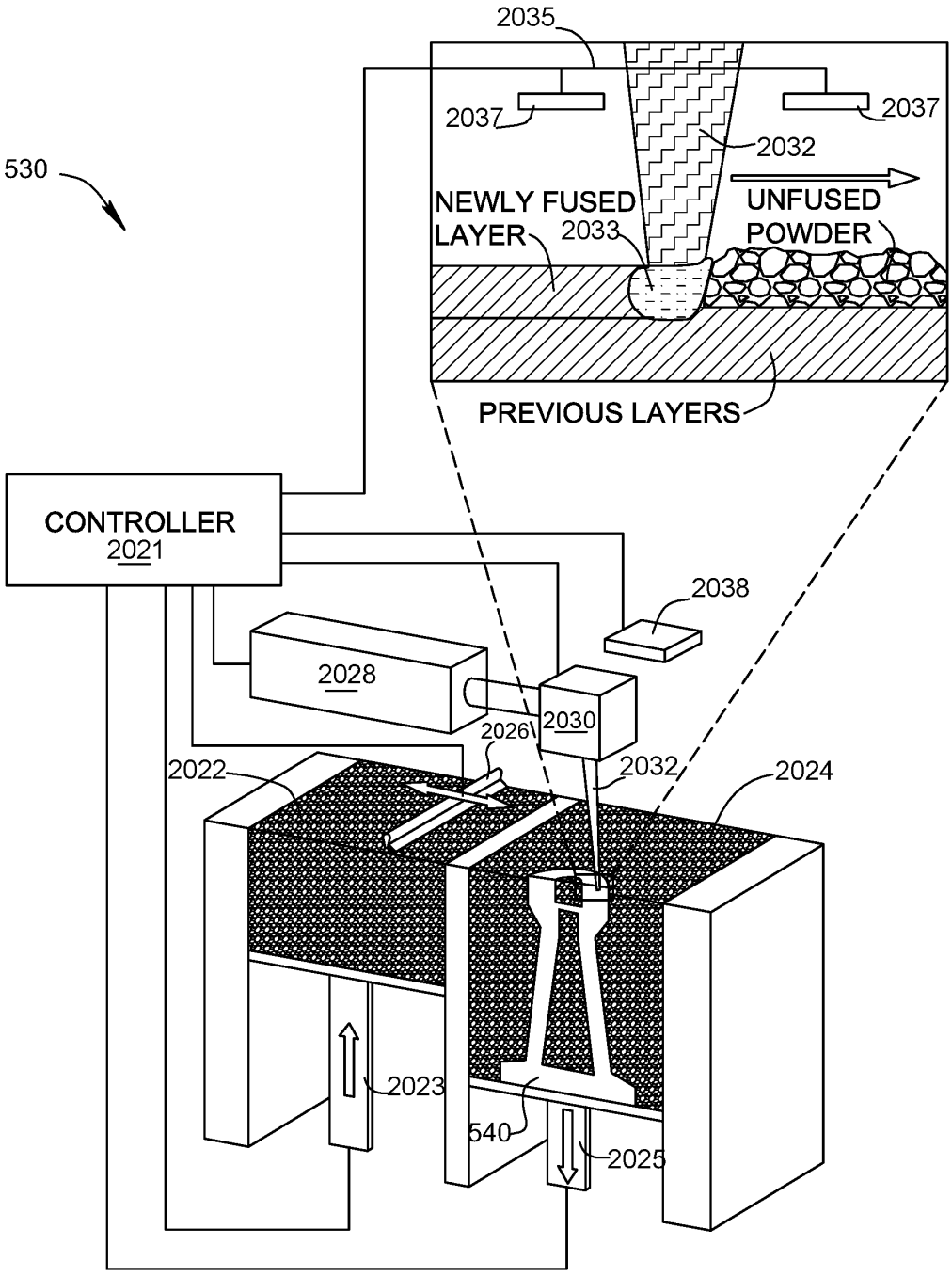
2035
2037
2037
2032
530
NEWLY FUSED LAYER
2033
UNFUSED POWDER
PREVIOUS LAYERS
CONTROLLER
2021
2038
2028
2030
2026
2022
2032
2024
2023
540
2025

FIG. 43

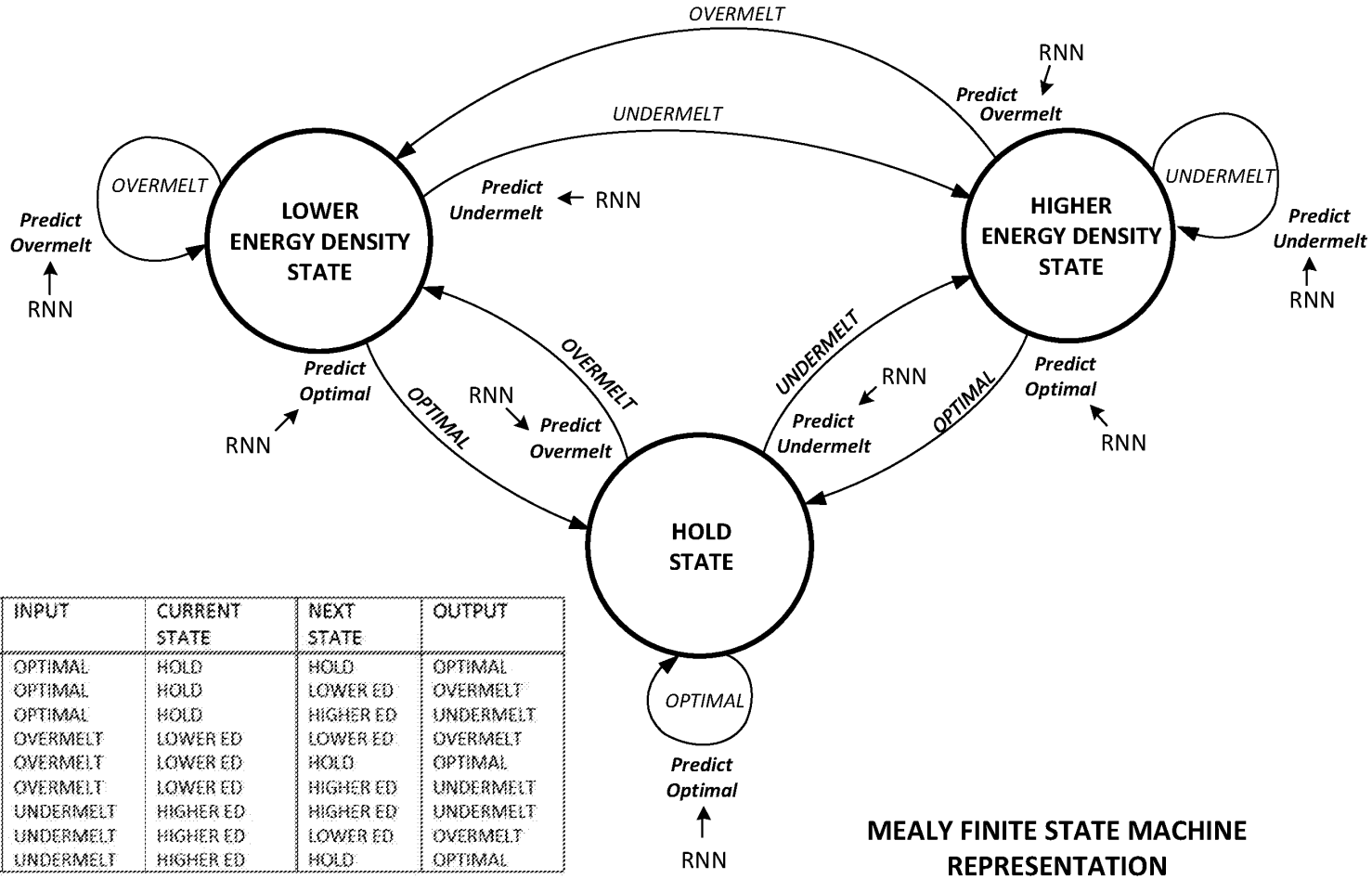

RNN PREDICTION	INPUT	CURRENT STATE	NEXT STATE	OUTPUT
Optimal	OPTIMAL	HOLD	HOLD	OPTIMAL
Overmelt	OPTIMAL	HOLD	LOWER ED	OVERMELT
Undermelt	OPTIMAL	HOLD	HIGHER ED	UNDERMELT
Overmelt	OVERMELT	LOWER ED	LOWER ED	OVERMELT
Optimal	OVERMELT	LOWER ED	HOLD	OPTIMAL
Undermelt	OVERMELT	LOWER ED	HIGHER ED	UNDERMELT
Undermelt	UNDERMELT	HIGHER ED	HIGHER ED	UNDERMELT
Overmelt	UNDERMELT	HIGHER ED	LOWER ED	OVERMELT
Optimal	UNDERMELT	HIGHER ED	HOLD	OPTIMAL

MEALY FINITE STATE MACHINE REPRESENTATION

FIG. 44