(12) INTERNATIONAL APPLICATION PUBLISHED UNDER THE PATENT COOPERATION TREATY (PCT)

(19) World Intellectual Property Organization
International Bureau

(43) International Publication Date
28 August 2025 (28.08.2025)

WIPO | PCT

(10) International Publication Number
WO 2025/178566 A1

(51) International Patent Classification:
F28F 9/22 (2006.01) *H05K 7/20* (2006.01)
F28D 9/00 (2006.01)

(21) International Application Number:
PCT/SG2025/050118

(22) International Filing Date:
20 February 2025 (20.02.2025)

(25) Filing Language: English

(26) Publication Language: English

(30) Priority Data:
10202400492U 23 February 2024 (23.02.2024) SG

(71) Applicant: **AGENCY FOR SCIENCE, TECHNOLOGY AND RESEARCH** [SG/SG]; 1 Fusionopolis Way, #20-10, Connexis North, Singapore 138632 (SG).

(72) Inventors: **WAN, Stephen Yee Ming**; c/o Institute of High Performance Computing, 1 Fusionopolis Way, #16-16 Connexis (South Tower), Singapore 138632 (SG). **LE, Quang Tuyen**; c/o Institute of High Performance Computing, 1 Fusionopolis Way, #16-16 Connexis (South Tower), Singapore 138632 (SG). **TRAN, Si Bui Quang**; c/o Institute of High Performance Computing, 1 Fusionopolis Way, #16-16 Connexis (South Tower), Singapore 138632 (SG).

(74) Agent: **CSASIA IP PTE. LTD**; 47 Scotts Road, #13-03, Goldbell Towers, Singapore 228233 (SG).

(81) Designated States *(unless otherwise indicated, for every kind of national protection available)*: AE, AG, AL, AM, AO, AT, AU, AZ, BA, BB, BG, BH, BN, BR, BW, BY, BZ, CA, CH, CL, CN, CO, CR, CU, CV, CZ, DE, DJ, DK, DM, DO, DZ, EC, EE, EG, ES, FI, GB, GD, GE, GH, GM, GT, HN, HR, HU, ID, IL, IN, IQ, IR, IS, IT, JM, JO, JP, KE, KG, KH, KN, KP, KR, KW, KZ, LA, LC, LK, LR, LS, LU, LY, MA, MD, MG, MK, MN, MU, MW, MX, MY, MZ, NA, NG, NI, NO, NZ, OM, PA, PE, PG, PH, PL, PT, QA, RO, RS, RU, RW, SA, SC, SD, SE, SG, SK, SL, ST, SV, SY, TH, TJ, TM, TN, TR, TT, TZ, UA, UG, US, UY, UZ, VC, VN, WS, ZA, ZM, ZW.

(84) Designated States *(unless otherwise indicated, for every kind of regional protection available)*: ARIPO (BW, CV, GH, GM, KE, LR, LS, MW, MZ, NA, RW, SC, SD, SL, ST, SZ, TZ, UG, ZM, ZW), Eurasian (AM, AZ, BY, KG, KZ,

(54) Title: DEVICE FOR AIR-COOLING OF MOTORS

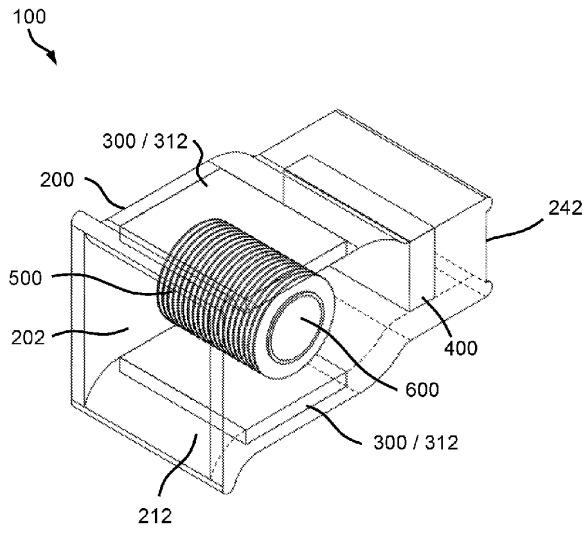

FIG. 1

(57) Abstract: A device includes a finned cooling structure and a shroud. The shroud defines a primary inlet, an outlet, and a channel extending along a longitudinal axis from the primary inlet to the outlet. The finned cooling structure is disposed in the channel between the primary inlet and the outlet. The shroud defines a plurality of secondary openings proximal to the finned cooling structure.

[Continued on next page]

WO 2025/178566 A1

RU, TJ, TM), European (AL, AT, BE, BG, CH, CY, CZ, DE, DK, EE, ES, FI, FR, GB, GR, HR, HU, IE, IS, IT, LT, LU, LV, MC, ME, MK, MT, NL, NO, PL, PT, RO, RS, SE, SI, SK, SM, TR), OAPI (BF, BJ, CF, CG, CI, CM, GA, GN, GQ, GW, KM, ML, MR, NE, SN, TD, TG).

Declarations under Rule 4.17:

— *of inventorship (Rule 4.17(iv))*

Published:

— *with international search report (Art. 21(3))*

— *in black and white; the international application as filed contained color or greyscale and is available for download from PATENTSCOPE*