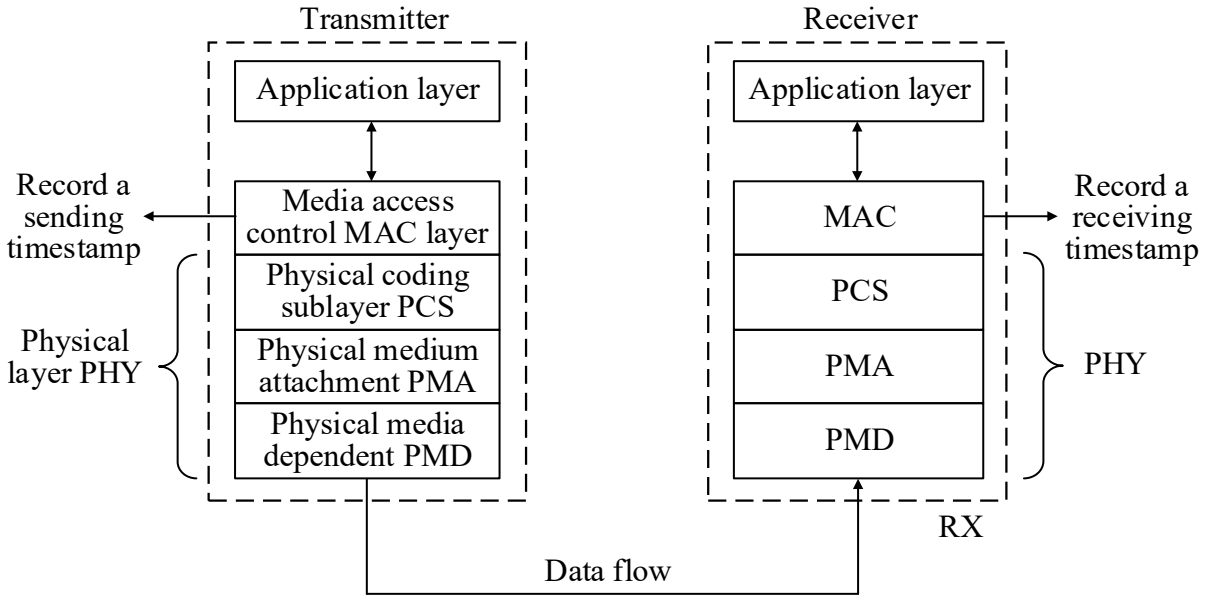
Transmitter
Receiver
Application layer
Application layer
Record a sending timestamp
Media access control MAC layer
MAC
Record a receiving timestamp
Physical coding sublayer PCS
PCS
Physical layer PHY
Physical medium attachment PMA
PMA
PHY
Physical media dependent PMD
PMD
RX
Data flow

FIG. 1a

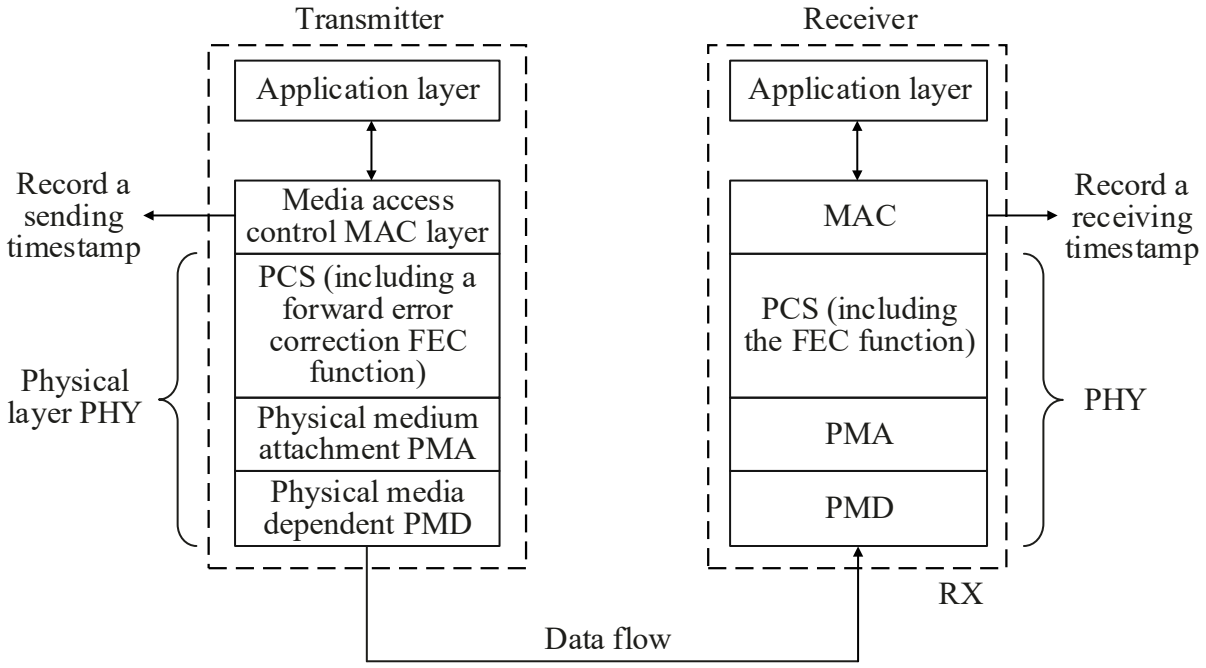
Transmitter
Receiver
Application layer
Application layer
Record a sending timestamp
Media access control MAC layer
MAC
Record a receiving timestamp
PCS (including a forward error correction FEC function)
PCS (including the FEC function)
Physical layer PHY
Physical medium attachment PMA
PMA
PHY
Physical media dependent PMD
PMD
RX
Data flow

FIG. 1b

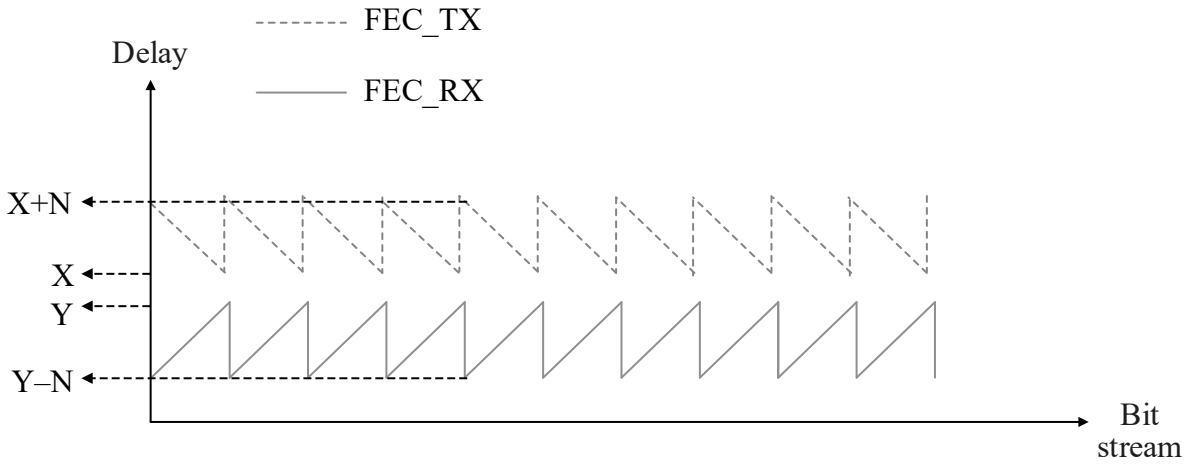
FEC_TX
FEC_RX
Delay
X+N
X
Y
Y–N
Bit stream

FIG. 1c

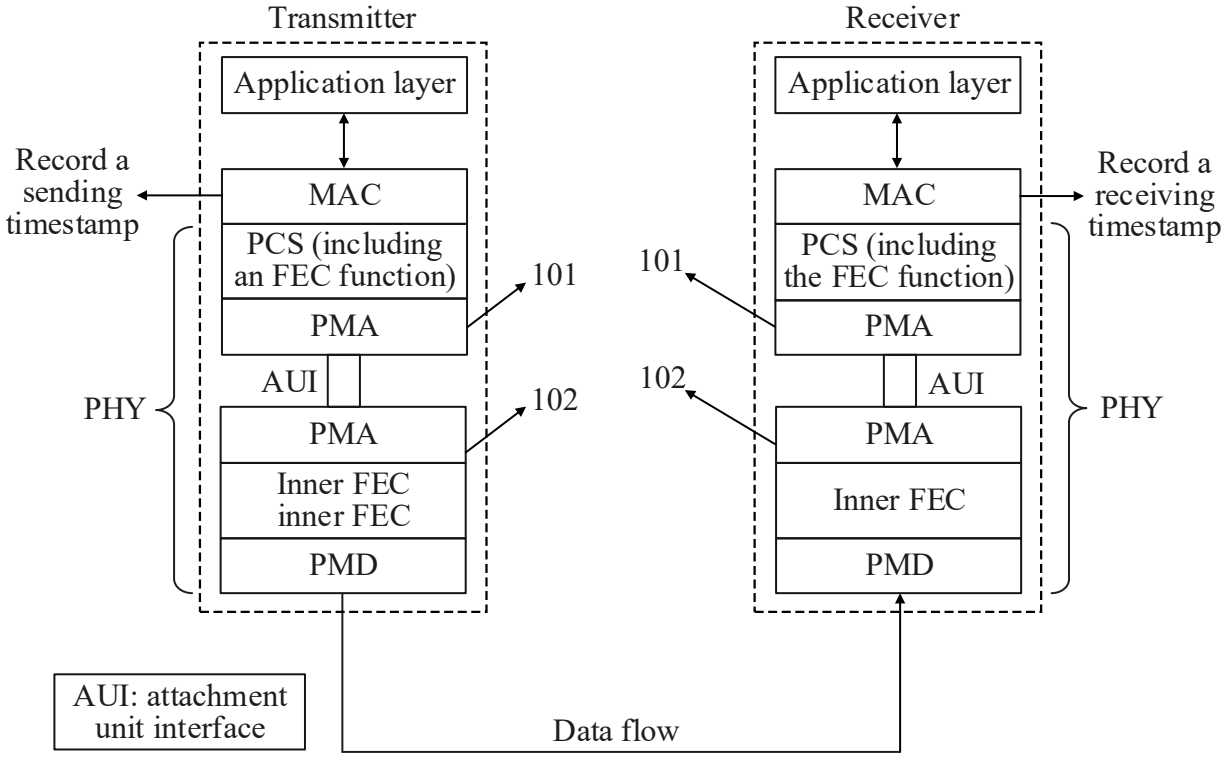
Transmitter
Receiver
Application layer
Application layer
Record a sending timestamp
MAC
PCS (including an FEC function)
PMA
AUI
PMA
Inner FEC inner FEC
PMD
101
102
PHY
MAC
PCS (including the FEC function)
PMA
AUI
PMA
Inner FEC
PMD
Record a receiving timestamp
101
102
PHY
AUI: attachment unit interface
Data flow

FIG. 1d

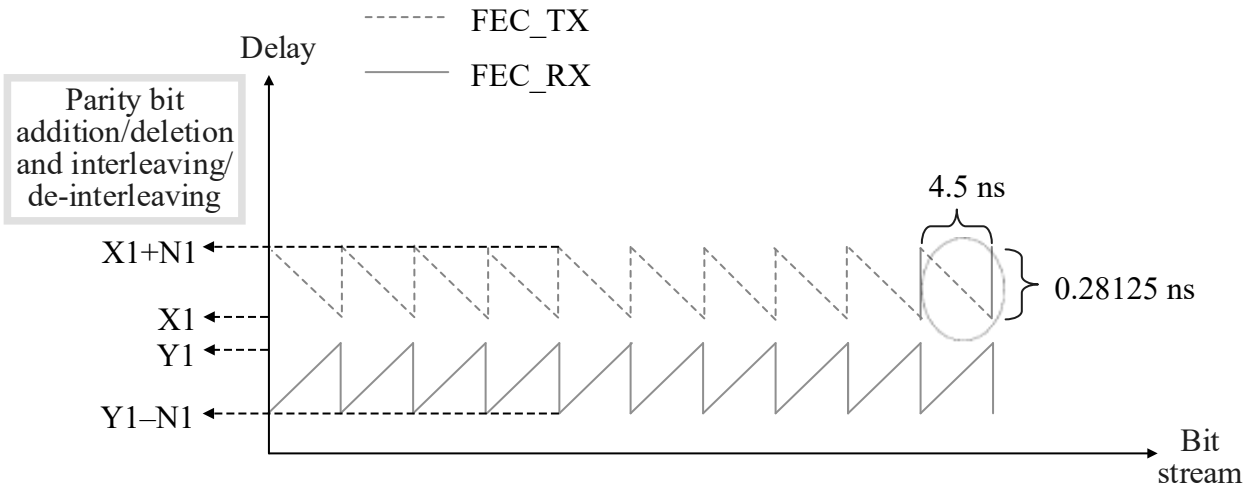

FIG. 1e

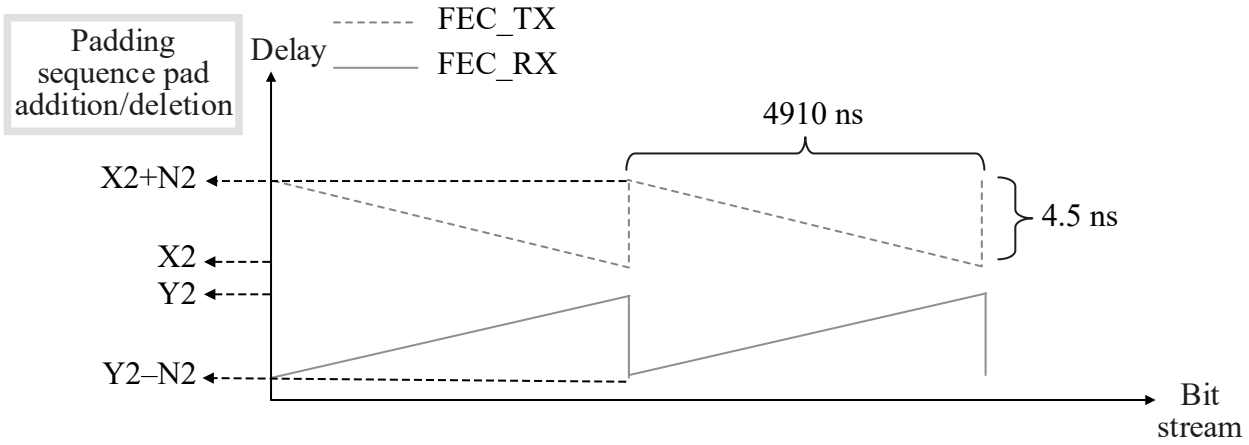

FIG. 1f

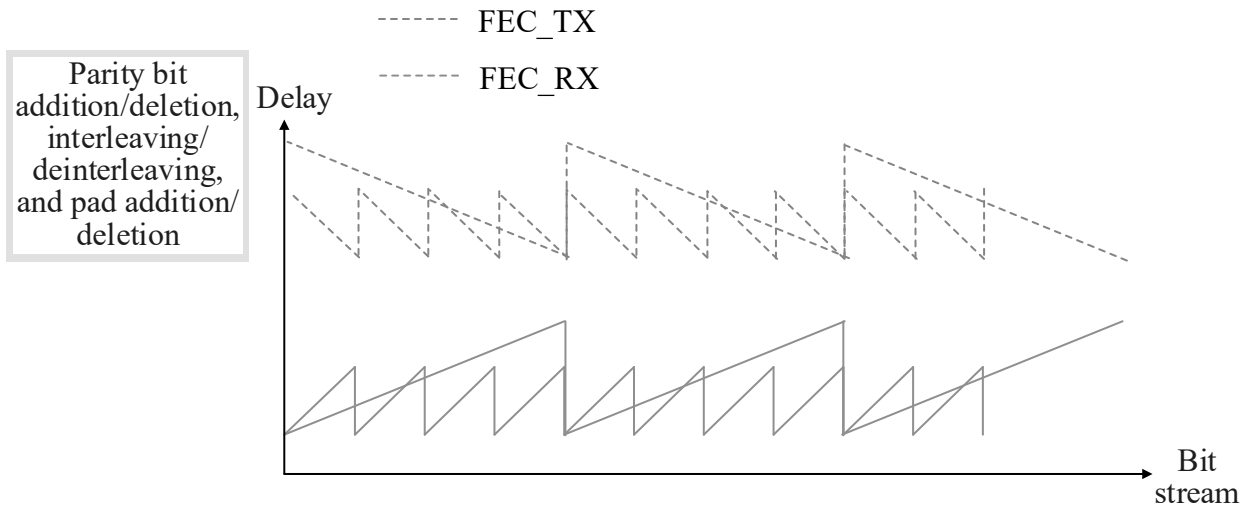

FIG. 1g

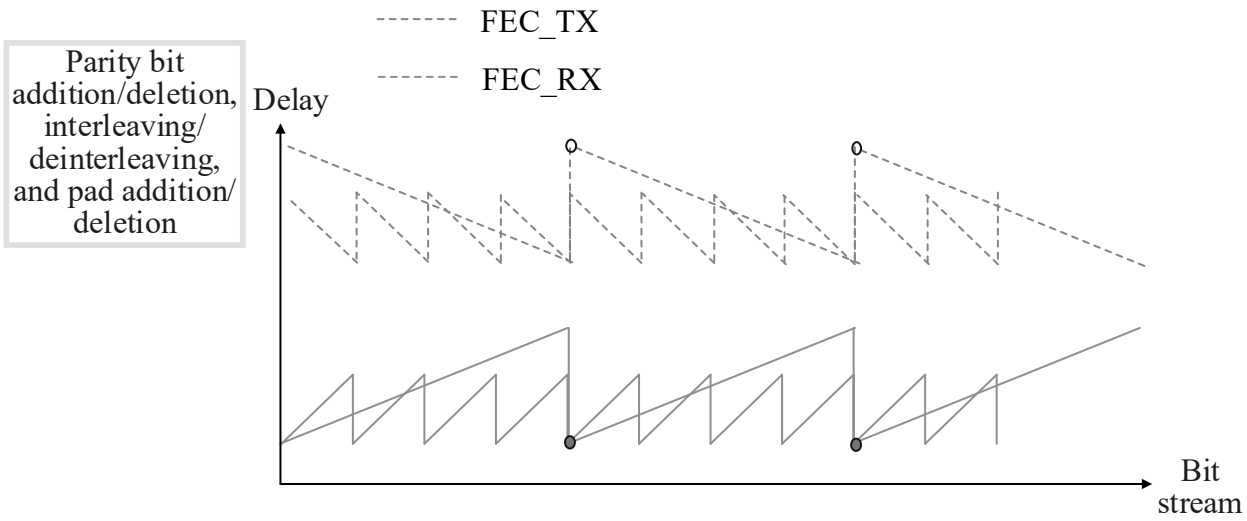
FEC_TX
FEC_RX
Parity bit addition/deletion, interleaving/ deinterleaving, and pad addition/ deletion
Delay
Bit stream

FIG. 1h

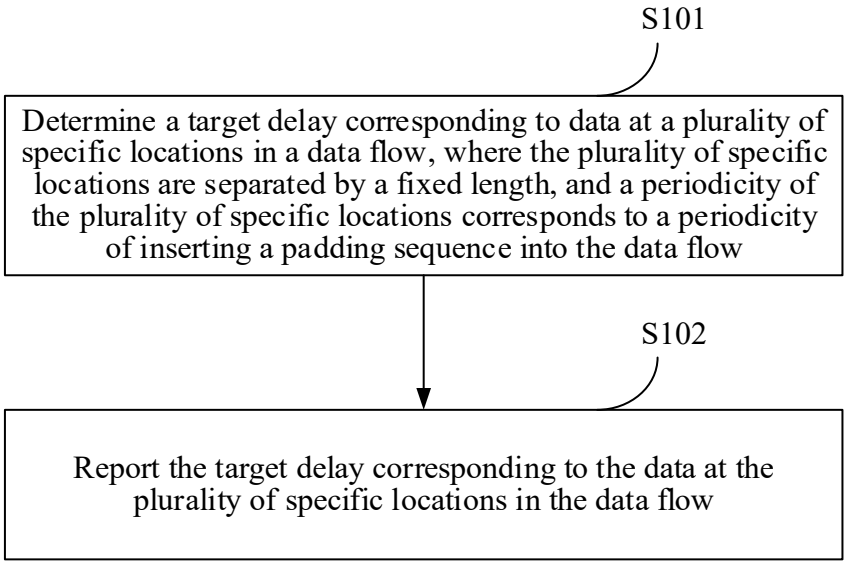
S101
Determine a target delay corresponding to data at a plurality of specific locations in a data flow, where the plurality of specific locations are separated by a fixed length, and a periodicity of the plurality of specific locations corresponds to a periodicity of inserting a padding sequence into the data flow
S102
Report the target delay corresponding to the data at the plurality of specific locations in the data flow

FIG. 2

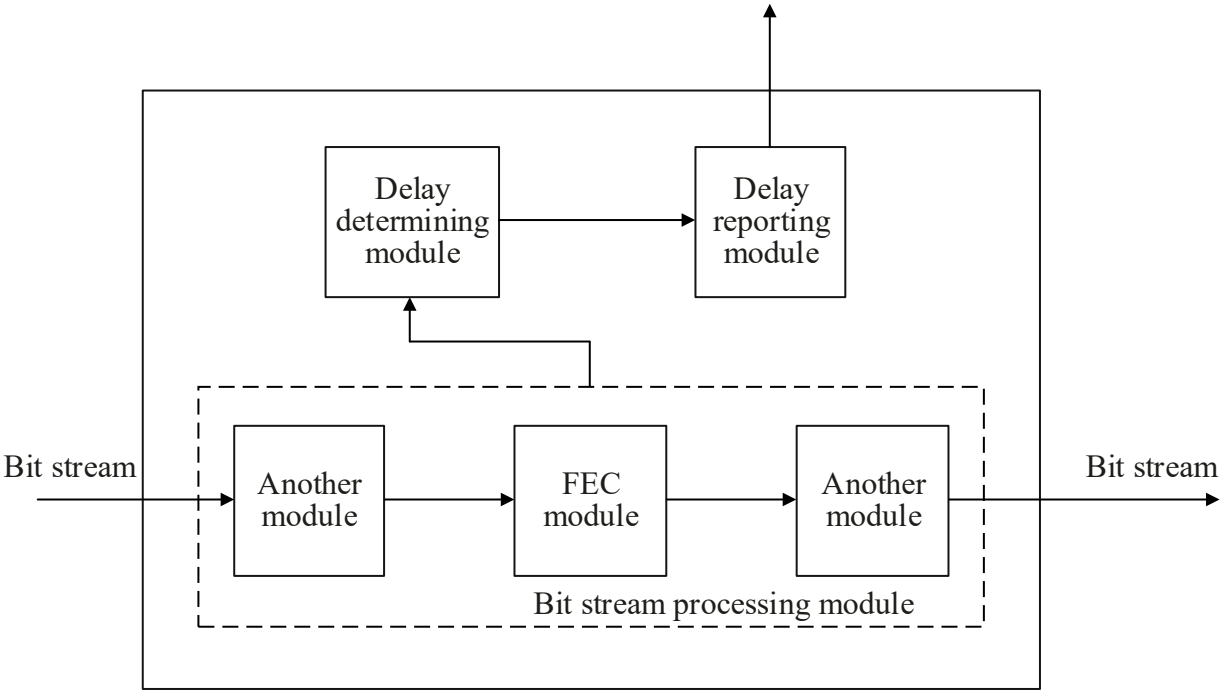
Delay determining module
Delay reporting module
Bit stream
Another module
FEC module
Another module
Bit stream
Bit stream processing module

FIG. 3

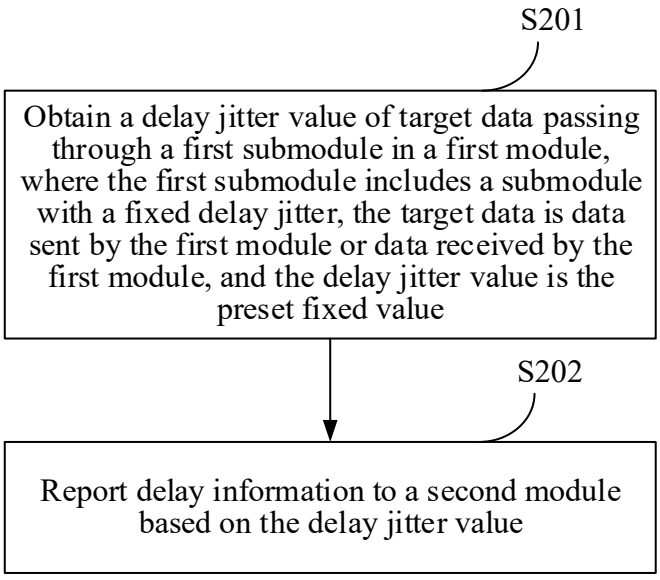
S201
Obtain a delay jitter value of target data passing through a first submodule in a first module, where the first submodule includes a submodule with a fixed delay jitter, the target data is data sent by the first module or data received by the first module, and the delay jitter value is the preset fixed value
S202
Report delay information to a second module based on the delay jitter value

FIG. 4

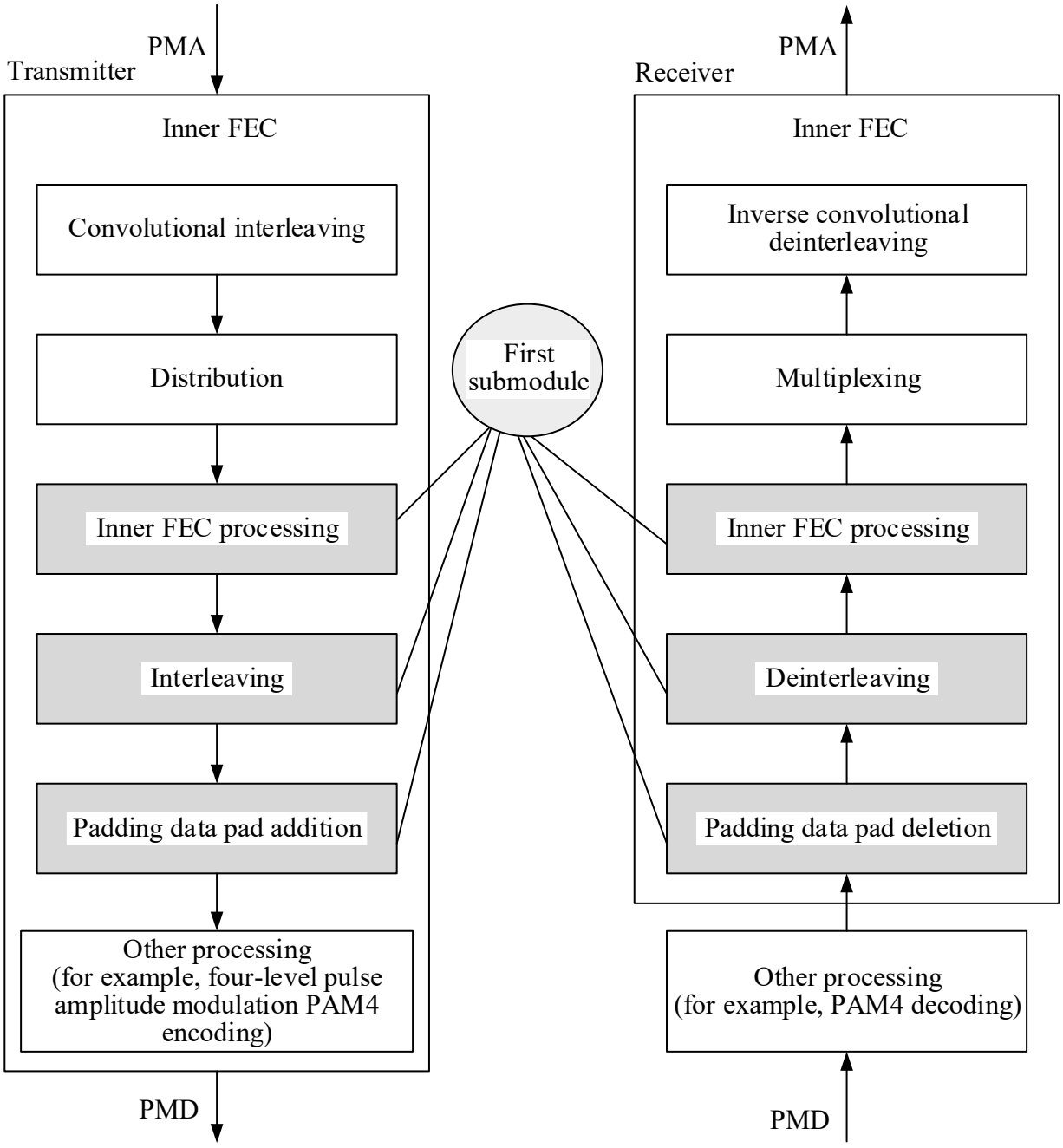
Transmitter
PMA
Inner FEC
Convolutional interleaving
Distribution
Inner FEC processing
Interleaving
Padding data pad addition
Other processing
(for example, four-level pulse amplitude modulation PAM4 encoding)
PMD
First submodule
Receiver
PMA
Inner FEC
Inverse convolutional deinterleaving
Multiplexing
Inner FEC processing
Deinterleaving
Padding data pad deletion
Other processing
(for example, PAM4 decoding)
PMD

FIG. 5

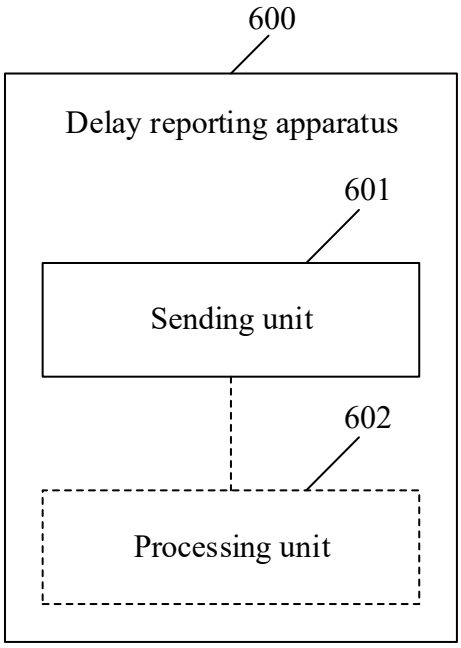
600
Delay reporting apparatus
601
Sending unit
602
Processing unit

FIG. 6

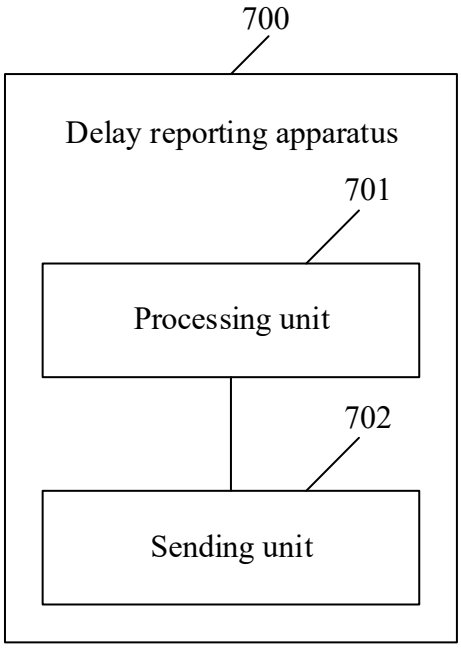
700
Delay reporting apparatus
701
Processing unit
702
Sending unit

FIG. 7

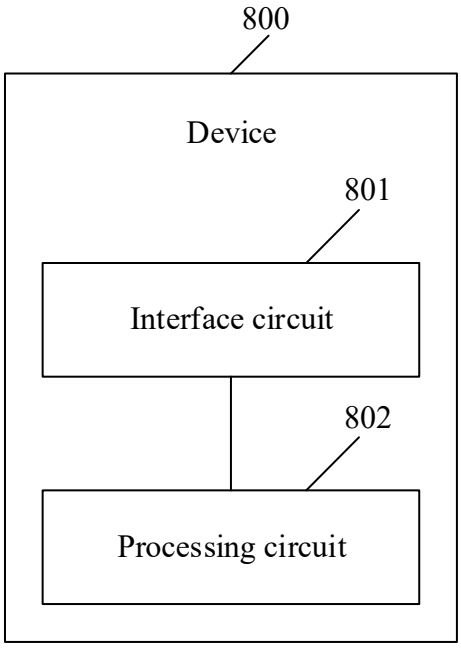
800
Device
801
Interface circuit
802
Processing circuit

FIG. 8

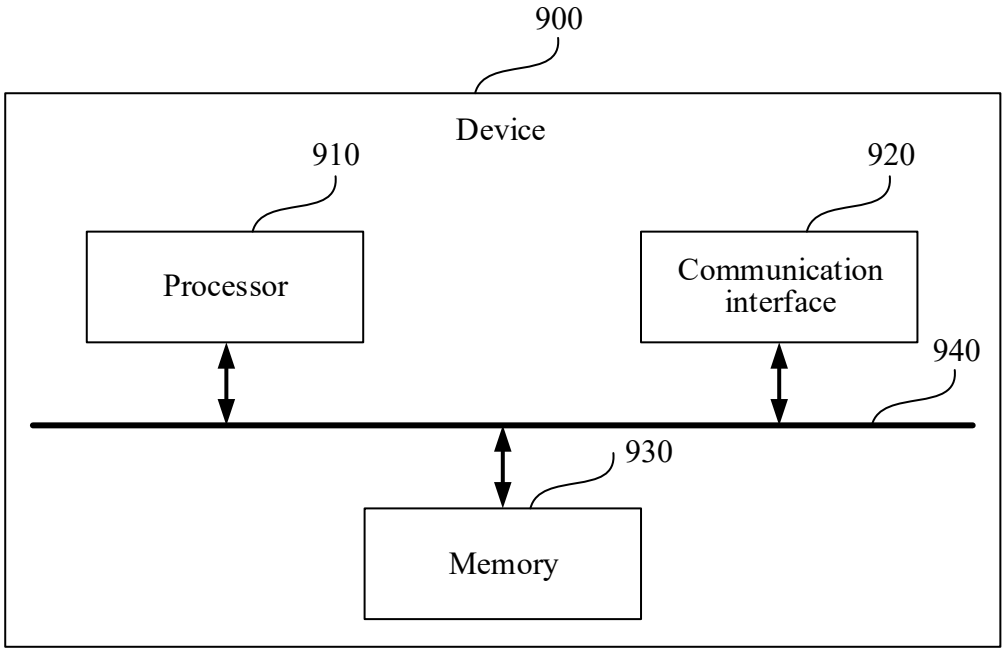
900
Device
910
Processor
920
Communication interface
940
930
Memory

FIG. 9

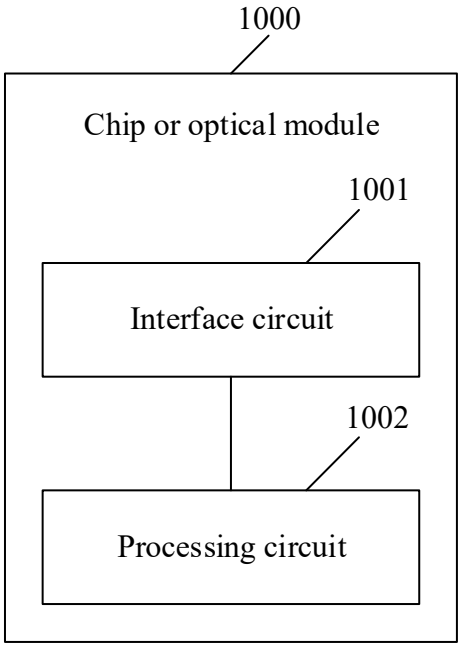
1000
Chip or optical module
1001
Interface circuit
1002
Processing circuit

FIG. 10