(12) INTERNATIONAL APPLICATION PUBLISHED UNDER THE PATENT COOPERATION TREATY (PCT)

(19) World Intellectual Property Organization
International Bureau

(43) International Publication Date
12 August 2010 (12.08.2010)

PCT

(10) International Publication Number
WO 2010/091224 A1

(51) International Patent Classification:
A62B 35/00 (2006.01)

(21) International Application Number:
PCT/US2010/023281

(22) International Filing Date:
5 February 2010 (05.02.2010)

(25) Filing Language: English

(26) Publication Language: English

(30) Priority Data:
12/367,853 9 February 2009 (09.02.2009) US

(71) Applicant *(for all designated States except US)*: **D B INDUSTRIES, INC.** [US/US]; 3833 Sala Way, Red Wing, MN 55066-5005 (US).

(72) Inventors; and
(75) Inventors/Applicants *(for US only)*: **JOHNSON, Andrew, P.** [US/US]; 300 E. 4th Street, Apt. 202, St. Paul, MN (US). **GOUDREAU, Paul, M.** [US/US]; 2285 Stewart Avenue, Apt 2416, St. Paul, MN 55116 (US).

(74) Agent: **MAU, Michael, L.**; IPLM Group, P.A., Post Office Box 18455, Minneapolis, MN 55418 (US).

(81) Designated States *(unless otherwise indicated, for every kind of national protection available)*: AE, AG, AL, AM, AO, AT, AU, AZ, BA, BB, BG, BH, BR, BW, BY, BZ, CA, CH, CL, CN, CO, CR, CU, CZ, DE, DK, DM, DO, DZ, EC, EE, EG, ES, FI, GB, GD, GE, GH, GM, GT, HN, HR, HU, ID, IL, IN, IS, JP, KE, KG, KM, KN, KP, KR, KZ, LA, LC, LK, LR, LS, LT, LU, LY, MA, MD, ME, MG, MK, MN, MW, MX, MY, MZ, NA, NG, NI, NO, NZ, OM, PE, PG, PH, PL, PT, RO, RS, RU, SC, SD, SE, SG, SK, SL, SM, ST, SV, SY, TH, TJ, TM, TN, TR, TT, TZ, UA, UG, US, UZ, VC, VN, ZA, ZM, ZW.

(84) Designated States *(unless otherwise indicated, for every kind of regional protection available)*: ARIPO (BW, GH, GM, KE, LS, MW, MZ, NA, SD, SL, SZ, TZ, UG, ZM, ZW), Eurasian (AM, AZ, BY, KG, KZ, MD, RU, TJ, TM), European (AT, BE, BG, CH, CY, CZ, DE, DK, EE, ES, FI, FR, GB, GR, HR, HU, IE, IS, IT, LT, LU, LV, MC, MK, MT, NL, NO, PL, PT, RO, SE, SI, SK, SM,

[Continued on next page]

(54) Title: HARNESS WEBBING PROTECTION SYSTEM

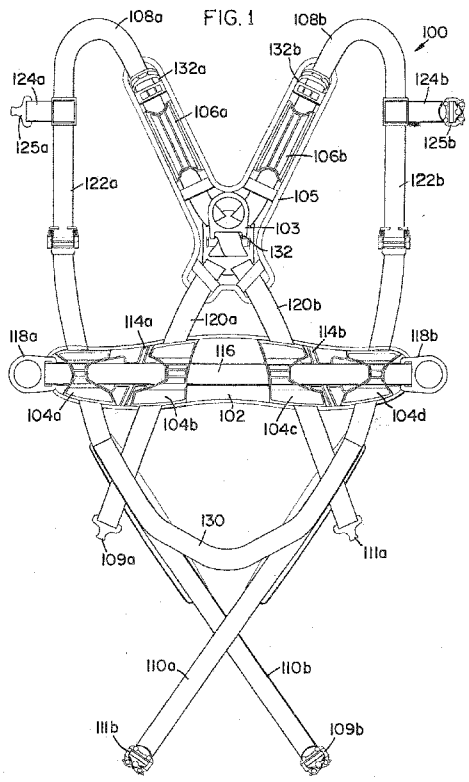

(57) Abstract: A webbing protection system is provided. The webbing protection system includes at least one pad portion and at least one protective member. The at least one pad portion has a first pad surface and a second pad surface. The first pad surface of each pad portion is configured to engage a portion of a body of a user. The second pad surface of each pad portion has at least one pad channel guide. Each protective member has at least one raised portion. Each protective member is coupled to an associated pad portion such that the raised portion of the protective member is aligned with an associated pad channel guide of the associated pad portion to provide a first guide path for the first webbing. Each protective member provides wear and abrasion protection for the first webbing proximate the guide path.

WO 2010/091224 A1

TR), OAPI (BF, BJ, CF, CG, CI, CM, GA, GN, GQ, GW, ML, MR, NE, SN, TD, TG).

Published:

— *with international search report (Art. 21(3))*

— *before the expiration of the time limit for amending the claims and to be republished in the event of receipt of amendments (Rule 48.2(h))*