CLAIMS

We claim:

~~1. A pharmaceutical composition comprising an anticancer drug encapsulated within a comb polymer, said comb polymer consisting essentially of the following structure:~~

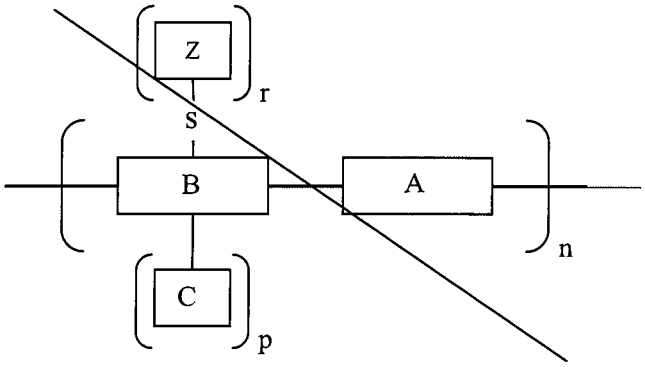

~~comprising a backbone formed of alternating branch-point moieties B and hydrophilic, water-soluble polymer blocks A; and having hydrophobic side chains C and targeting moieties Z attached to the branch-point moieties, wherein:~~

~~each hydrophobic side chain C is independently selected from the group consisting of C_6-C_{30} linear or branched hydrocarbons optionally substituted with one or more hydrophilic substituents; C_6-C_{30} cyclic or polycyclic hydrocarbons optionally substituted with one or more hydrophilic substituents; and hydrophobic amino acids, peptides and polymers;~~

~~each targeting moiety Z is independently a ligand having specific binding affinity for the surface of cancer cells;~~

~~s is a bond or a spacer moiety;~~

~~the value of n ranges from 1 to about 100;~~

~~the average value of p ranges from greater than one to four; and~~

~~the average value of r ranges from 0 to 8.~~

~~2. The composition of claim 1, wherein n ranges from 2 to about 100.~~

~~3. The composition of claim 1, wherein at least one~~
~~the group consisting of receptor-specific ligands, antibo~~
~~growth factors.~~

~~4. The composition of claim 2, wherein at least one~~
~~the group consisting of receptor-specific ligands, antibo~~
~~growth factors.~~

~~5. The composition of claim 3, wherein said ligand~~
~~consisting of epidermal growth factor, vascular endothel~~
~~growth factor, folic acid, methotrexate, pteroic acid, estr~~
~~mannose-6-phosphate, and antibodies and antibody frag~~

~~irinotecan, imatinib, sunitinib, sorafenib, axitinib, pazopanib, etoposide, methotrexate, methopterin, dichloromethotrexate, 5-fluorouracil, 6-mercaptopurine, staurosporine, cytarabine, melphalan, leurosine, actinomycin, daunorubicin, epirubicin, idarubicin, mitomycin D, mitomycin A, carminomycin, aminopterin, tallysomycin, podophyllotoxin, cisplatinum, carboplatinum, vinblastine, vincristine, vindesin, retinoic acid, and tamoxifen.~~

~~9. The composition of any one of claims 1-8, wherein the polymer block A is selected from the group consisting of poly(ethylene glycol), poly(propylene glycol), and copolymers thereof.~~

~~10. The composition of claim 9, wherein the polymer block A has an average length of between 4 and 700 monomer units.~~

~~11~~1. ~~The composition of claim 1, wherein the polymer has the structure~~A pharmaceutical composition comprising an anticancer drug encapsulated within a comb polymer, said comb polymer consisting essentially of the following structure:

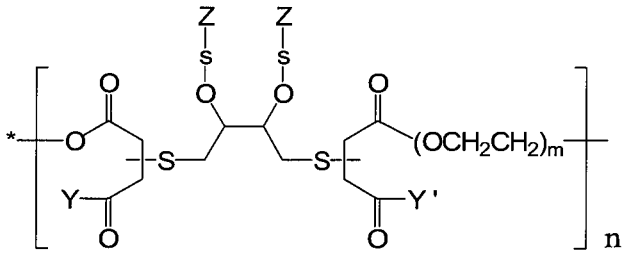

wherein:

each targeting moiety Z is independently a ligand having specific binding affinity for the surface of cancer cells;

s is a bond or a spacer moiety;

the value of n ranges from 1 to about 100;

m is 4-700~~,~~; and

Y and Y' each have a logP value greater than about 1.4, and are independently selected from the group consisting of R, OR, COOR, SR, NHR, NRR', ONHR, NHOR, $NRNH_2$, NHNHR, NRNHR', and NHNRR', wherein R and R' are independently selected from the group consisting of C_6-C_{30} branched or linear hydrocarbons optionally substituted with one or more hydrophilic substituents, C_6-C_{30} cyclic or polycyclic hydrocarbons optionally substituted with one or more hydrophilic substituents, and hydrophobic amino acids, peptides and polymers, with the proviso that the anticancer drug is not camptothecin or doxorubicin.

~~12~~2. ~~The composition of claim 1, wherein the polymer has the structure~~A pharmaceutical composition comprising an anticancer drug encapsulated within a comb polymer, said comb polymer consisting essentially of the following structure:

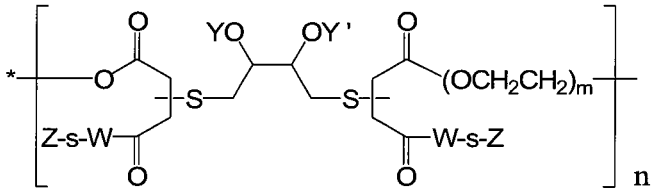

wherein:

each targeting moiety Z is independently a ligand having specific binding affinity for the surface of cancer cells;

s is a bond or a spacer moiety;

the value of n ranges from 1 to about 100;

m is 4-700,

W is O or NH, and

Y and Y' each have a logP value greater than about 1.4, and are independently selected from the group consisting of R, COR, COOR, CONHR, CONRR', CONHOR, $CONRNH_2$, CONHNHR, CONRNHR', and CONHNRR', wherein R and R' are independently selected from the group consisting of C_6-C_{30} branched or linear hydrocarbons optionally substituted with one or more hydrophilic substituents, C_6-C_{30} cyclic or polycyclic hydrocarbons optionally substituted with

one or more hydrophilic substituents, and hydrophobic amino acids, peptides and polymers.

~~13~~3. ~~The composition of claim 1, wherein the polymer has the structure~~A pharmaceutical composition comprising an anticancer drug encapsulated within a comb polymer, said comb polymer consisting essentially of the following structure:

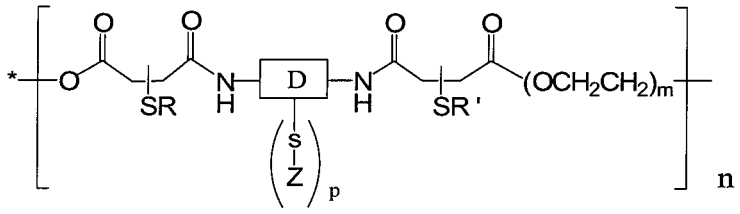

wherein:

each targeting moiety Z is independently a ligand having specific binding affinity for the surface of cancer cells;

s is a bond or a spacer moiety;

the value of n ranges from 1 to about 100;

the moiety D is derived from a diamine ~~having the general structure~~

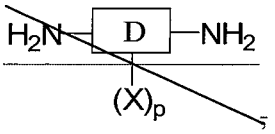

~~wherein each X is independently a reactive functional group,~~ selected from the group consisting of 1,3-diaminopropane, $H_2N(CH_2)_3NH(CH_2)_3NH_2$, 1,4-diaminobutane, 2-(O-BOC)-1,3-diamino-2-propanol, N',N"-di(BOC)spermine, N'-BOC spermidine, N',N",N"'-tri(BOC) pentaethylene hexamine, agmatine, lysine t-butyl ester, 1,6-diaminohexane, 1,4-phenylenediamine, 1,3-phenylenediamine, and 1,4-diaminobutane-2,3-diol acetonide;

p is 0-4; ~~and~~

m is 4-700; and ~~wherein~~

R and R' each have a logP value greater than about 1.4, and are independently selected from the group consisting of C_6-C_{30} branched or linear hydrocarbons optionally substituted with one or more hydrophilic substituents, C_6-C_{30} cyclic or

polycyclic hydrocarbons optionally substituted with one or more hydrophilic substituents, and hydrophobic amino acids, peptides and polymers.

~~144~~. ~~The composition of claim 1, wherein the polymer has the structure~~A pharmaceutical composition comprising an anticancer drug encapsulated within a comb polymer, said comb polymer consisting essentially of the following structure:

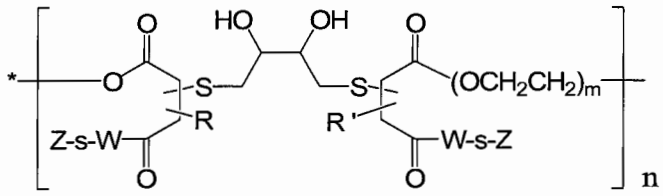

Wherein:

each targeting moiety Z is independently a ligand having specific binding affinity for the surface of cancer cells;

s is a bond or a spacer moiety;

the value of n ranges from 1 to about 100;

m is 4-700;

W is O or NH_2; and

R and R' each have a logP value greater than about 1.4, and are independently selected from the group consisting of C_6-C_{30} branched or linear hydrocarbons optionally substituted with one or more hydrophilic substituents, C_6-C_{30} cyclic or polycyclic hydrocarbons optionally substituted with one or more hydrophilic substituents, and hydrophobic amino acids, peptides and polymers.

~~155~~. ~~The composition of claim 1, wherein the polymer has the structure~~A pharmaceutical composition comprising an anticancer drug encapsulated within a comb polymer, said comb polymer consisting essentially of the following structure:

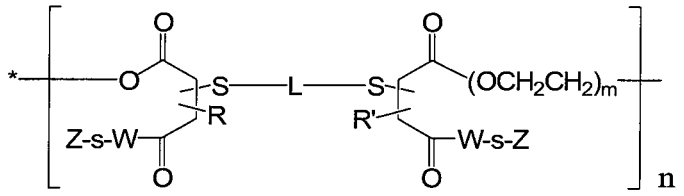

wherein:

each targeting moiety Z is independently a ligand having specific binding affinity for the surface of cancer cells;

s is a bond or a spacer moiety;

the value of n ranges from 1 to about 100;

m is 4-700,

L is phenylene,

C_2-C_6 alkylene, or benzenedimethylene,

W is O or NH, and

R and R' each have a logP value greater than about 1.4, and are independently selected from the group consisting of C_6-C_{30} branched or linear hydrocarbons optionally substituted with one or more hydrophilic substituents, C_6-C_{30} cyclic or polycyclic hydrocarbons optionally substituted with one or more hydrophilic substituents, and hydrophobic amino acids, peptides and polymers.

~~16. A pharmaceutical composition comprising one or more pharmaceutically acceptable carriers or excipients, and an anticancer drug encapsulated within a comb polymer, said comb polymer consisting essentially of the following structure:~~

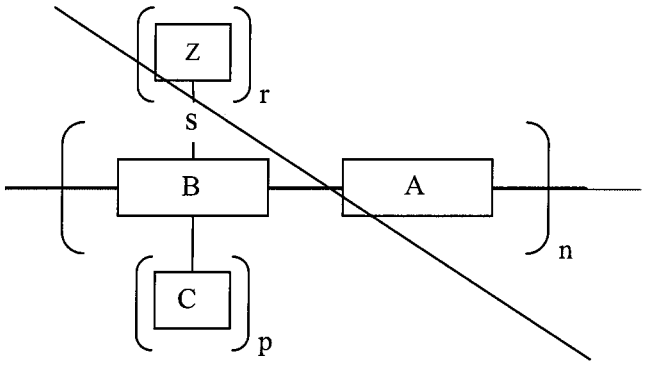

~~comprising a backbone formed of alternating branch-point moieties B and hydrophilic, water-soluble polymer blocks A; and having hydrophobic side chains C and targeting moieties Z attached to the branch-point moieties, wherein:~~

~~each hydrophobic side chain C is independently selected from the group consisting of C_6-C_{30} linear or branched hydrocarbons optionally substituted with one or more hydrophilic substituents; C_6-C_{30} cyclic or polycyclic hydrocarbons optionally substituted with one or more hydrophilic substituents; and hydrophobic amino acids, peptides and polymers;~~

~~each targeting moiety Z is independently a ligand having specific binding affinity for the surface of cancer cells;~~

~~s is a bond or a spacer moiety;~~

~~the value of n ranges from 1 to about 100;~~

~~the average value of p ranges from greater than one to four; and~~

~~the average value of r ranges from 0 to 8.~~

~~176~~176. Use of a pharmaceutical composition according to any one of claims 1-~~165~~165 in the manufacture of a medicament for treating cancer.