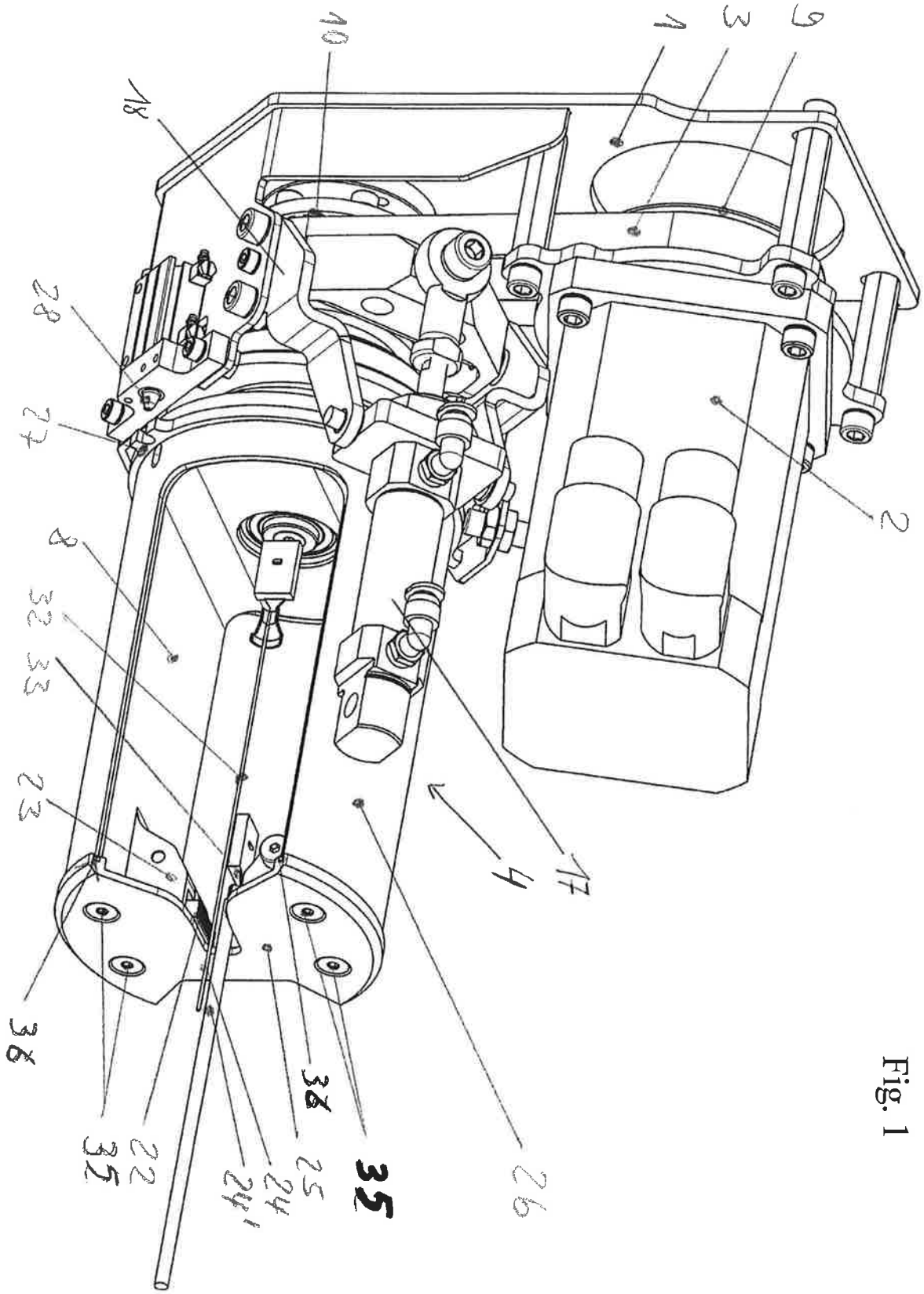

Fig. 1

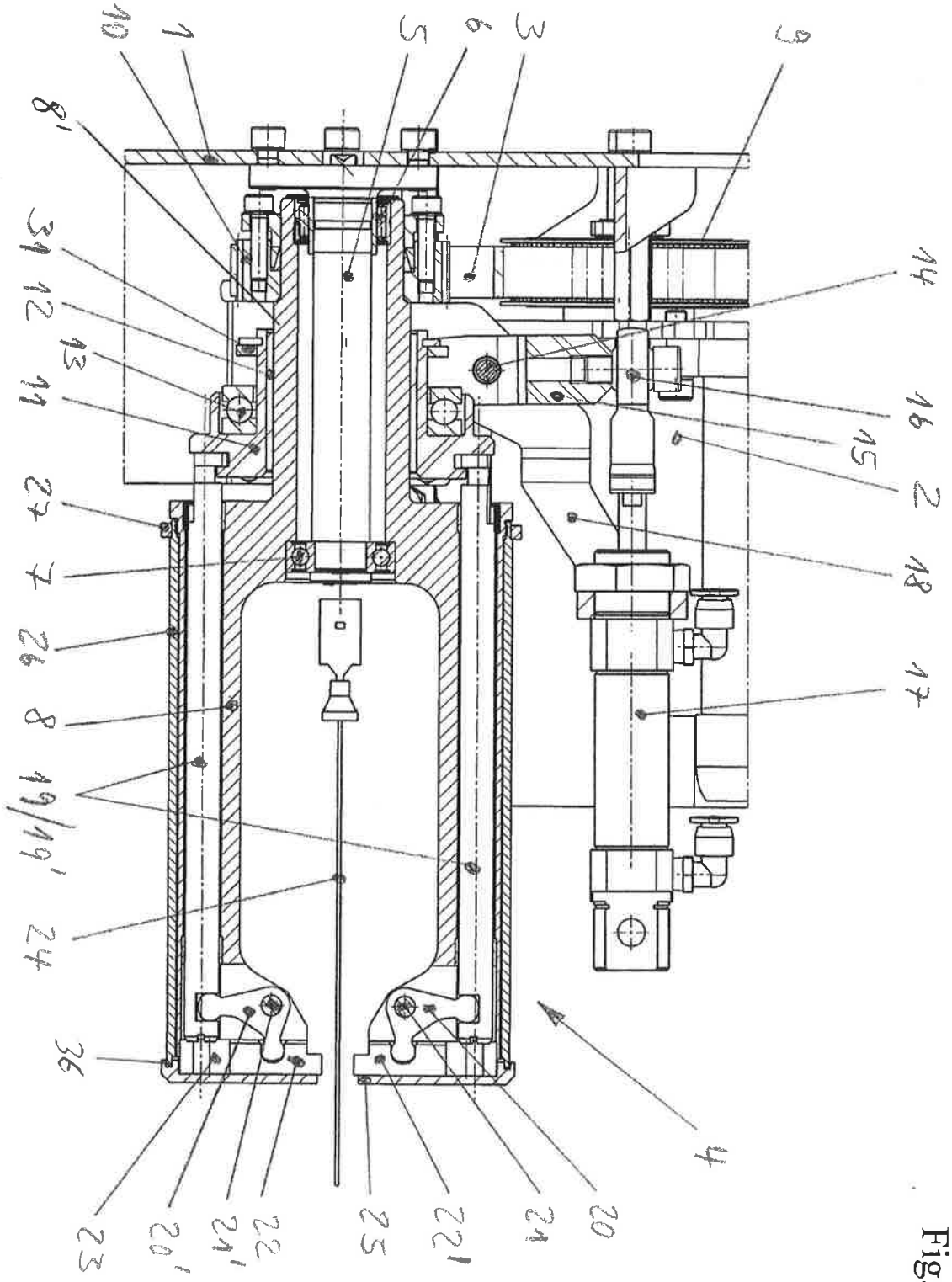
10
1
5
6
3
9
8'
31
12
13
11
27
7
26
8
19/19'
24
36
14
16
15
2
18
17
4
23
20'
21'
22
25
22'
21
20

Fig.2

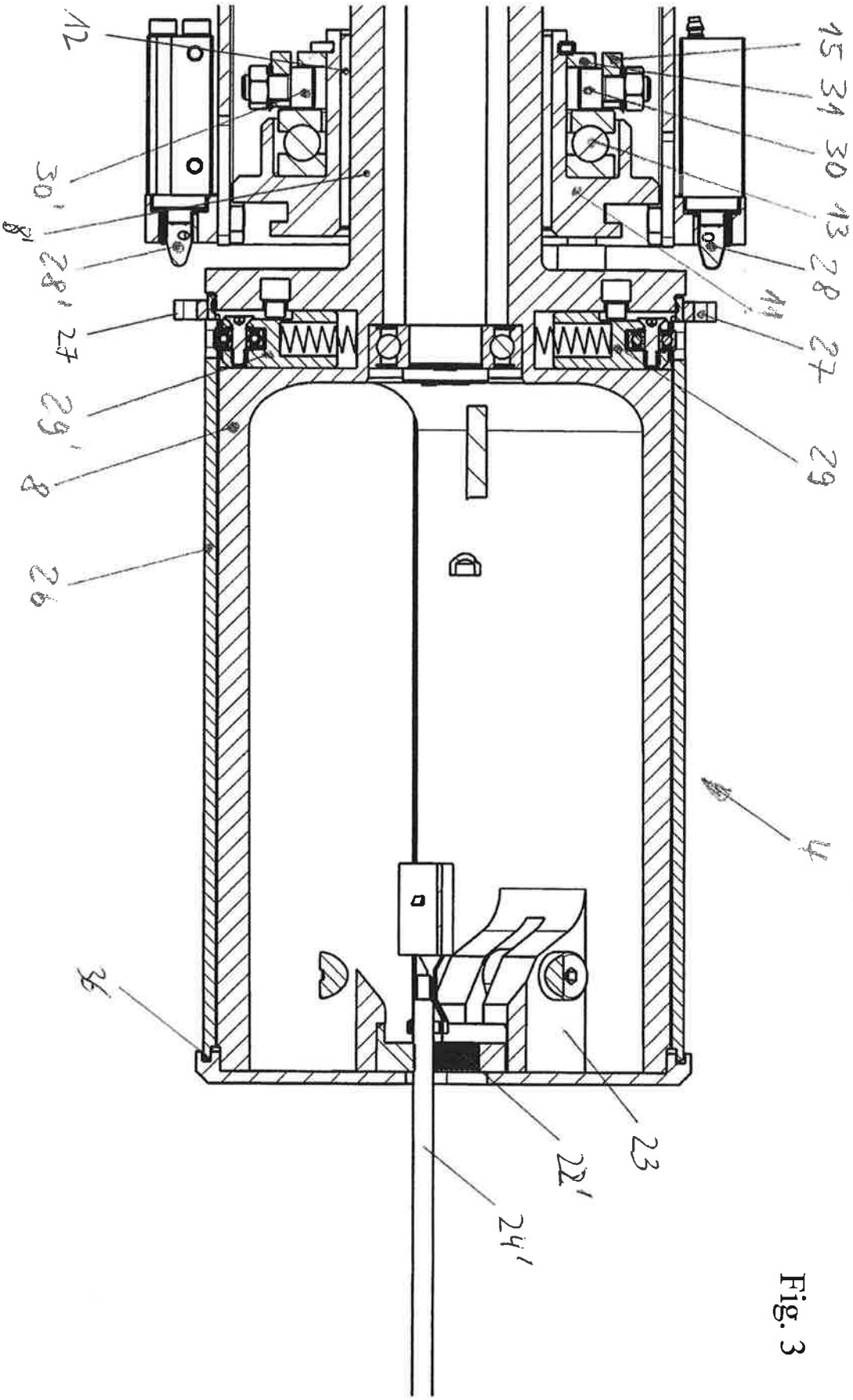

Fig. 3

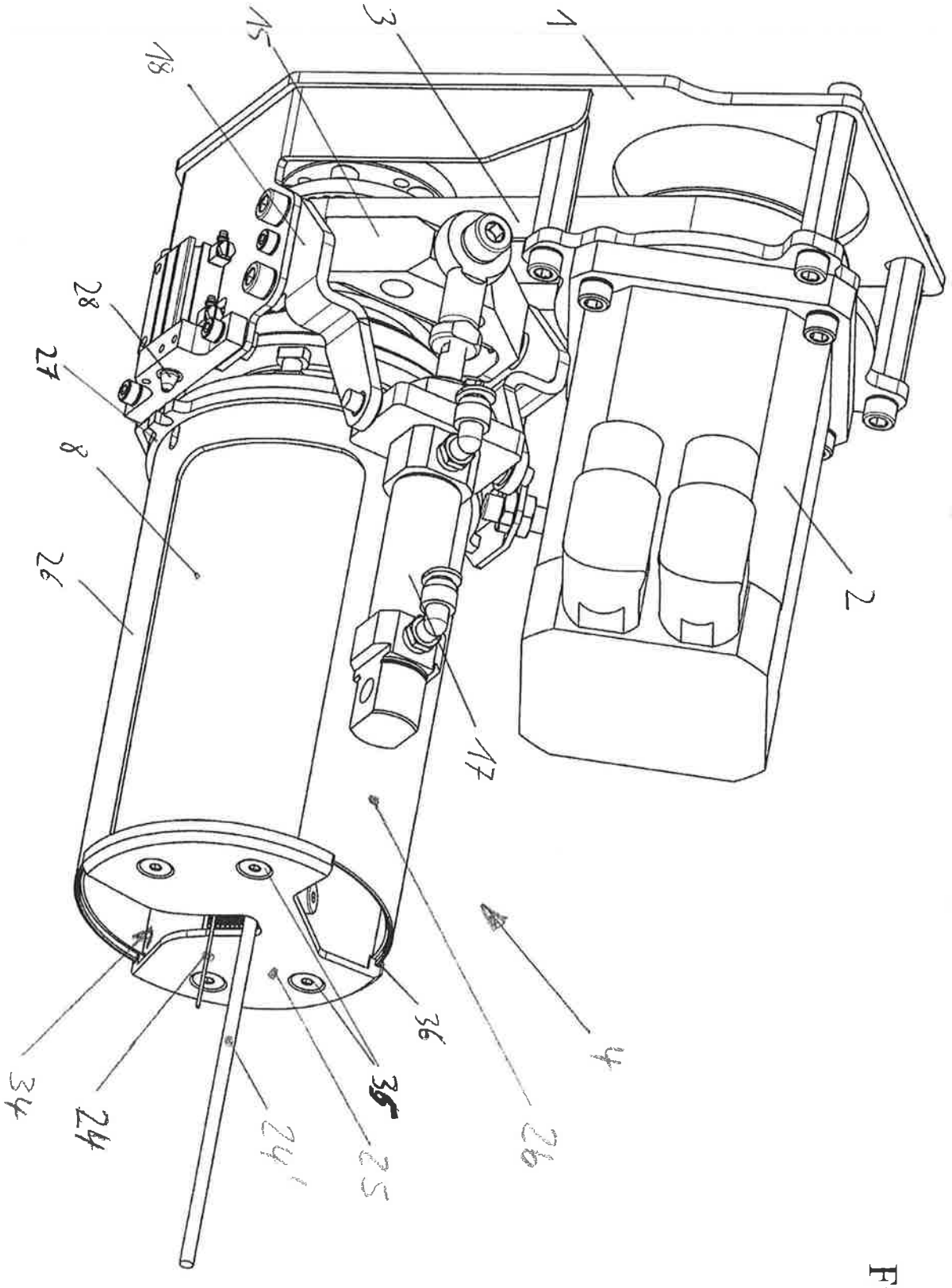

Fig. 4