(12) INTERNATIONAL APPLICATION PUBLISHED UNDER THE PATENT COOPERATION TREATY (PCT)

(19) World Intellectual Property Organization
International Bureau

(43) International Publication Date
5 November 2015 (05.11.2015)

WIPO | PCT

(10) International Publication Number
WO 2015/168632 A3

(51) International Patent Classification:
B63B 21/50 (2006.01)

(21) International Application Number:
PCT/US2015/028911

(22) International Filing Date:
1 May 2015 (01.05.2015)

(25) Filing Language: English

(26) Publication Language: English

(30) Priority Data:
14/268,866 2 May 2014 (02.05.2014) US

(71) Applicant: **SEAHORSE EQUIPMENT CORP** [US/US]; 1255 Enclave Parkway, Suite 600, Houston, TX 77077 (US).

(72) Inventors: **CARRICO, Todd, Vincent**; 1935 Cloverfield Dr., Katy, TX 77494 (US). **LEVERETTE, Steven, John**; 1130 Grand River Drive, Richmond, TX 77406 (US).

(74) Agent: **KEIRS, Christopher, D.**; Wong, Cabello, Lutsch, Rutherford &, Brucculeri L.L.P., 20333 Tomball Parkway, Suite 600, Houston, TX 77070 (US).

(81) Designated States *(unless otherwise indicated, for every kind of national protection available)*: AE, AG, AL, AM, AO, AT, AU, AZ, BA, BB, BG, BH, BN, BR, BW, BY, BZ, CA, CH, CL, CN, CO, CR, CU, CZ, DE, DK, DM, DO, DZ, EC, EE, EG, ES, FI, GB, GD, GE, GH, GM, GT, HN, HR, HU, ID, IL, IN, IR, IS, JP, KE, KG, KN, KP, KR, KZ, LA, LC, LK, LR, LS, LU, LY, MA, MD, ME, MG, MK, MN, MW, MX, MY, MZ, NA, NG, NI, NO, NZ, OM, PA, PE, PG, PH, PL, PT, QA, RO, RS, RU, RW, SA, SC, SD, SE, SG, SK, SL, SM, ST, SV, SY, TH, TJ, TM, TN, TR, TT, TZ, UA, UG, US, UZ, VC, VN, ZA, ZM, ZW.

(84) Designated States *(unless otherwise indicated, for every kind of regional protection available)*: ARIPO (BW, GH, GM, KE, LR, LS, MW, MZ, NA, RW, SD, SL, ST, SZ, TZ, UG, ZM, ZW), Eurasian (AM, AZ, BY, KG, KZ, RU, TJ, TM), European (AL, AT, BE, BG, CH, CY, CZ, DE, DK, EE, ES, FI, FR, GB, GR, HR, HU, IE, IS, IT, LT, LU, LV, MC, MK, MT, NL, NO, PL, PT, RO, RS, SE, SI, SK, SM, TR), OAPI (BF, BJ, CF, CG, CI, CM, GA, GN, GQ, GW, KM, ML, MR, NE, SN, TD, TG).

Declarations under Rule 4.17:

— *as to applicant's entitlement to apply for and be granted a patent (Rule 4.17(ii))*

Published:

— *with international search report (Art. 21(3))*

— *before the expiration of the time limit for amending the claims and to be republished in the event of receipt of amendments (Rule 48.2(h))*

(88) Date of publication of the international search report:
6 May 2016

(54) Title: BUOYANT TURRET MOORING WITH POROUS TURRET CAGE

FIG. 1

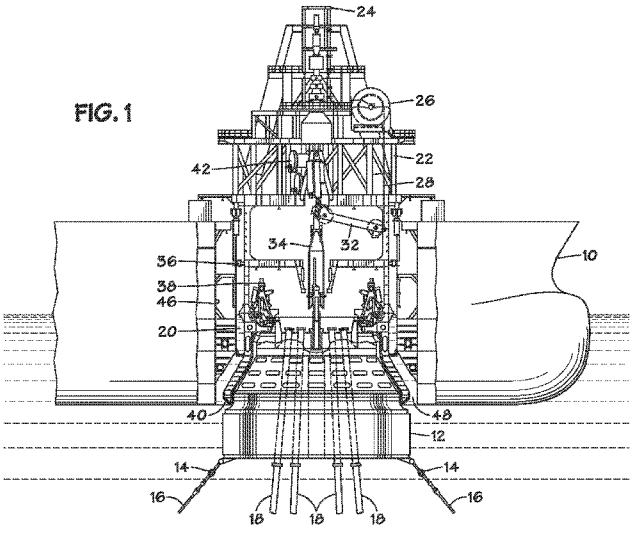

(57) Abstract: A disconnectable buoyant turret mooring system for an FPSO is vulnerable to damage from collisions between the buoy and the buoy turret cage during mating and de-mating operations. It is therefore desirable that the buoy separate quickly from the turret of the FPSO vessel during a disconnect operation. A buoy turret cage is provided with a certain degree of porosity that allows a flow of seawater from the outside of the receptor to the inner surface of the receptor. Introducing water in this way relieves the suction forces and allows for a quicker separation of the buoy from the turret of the FPSO vessel, minimizing the time during which an uncontrolled collision between the buoy and the FPSO vessel is most likely. Filling a portion of the turret above the mooring buoy with water prior to releasing the buoy also decreases the separation time.

WO 2015/168632 A3