19 NOV 2004

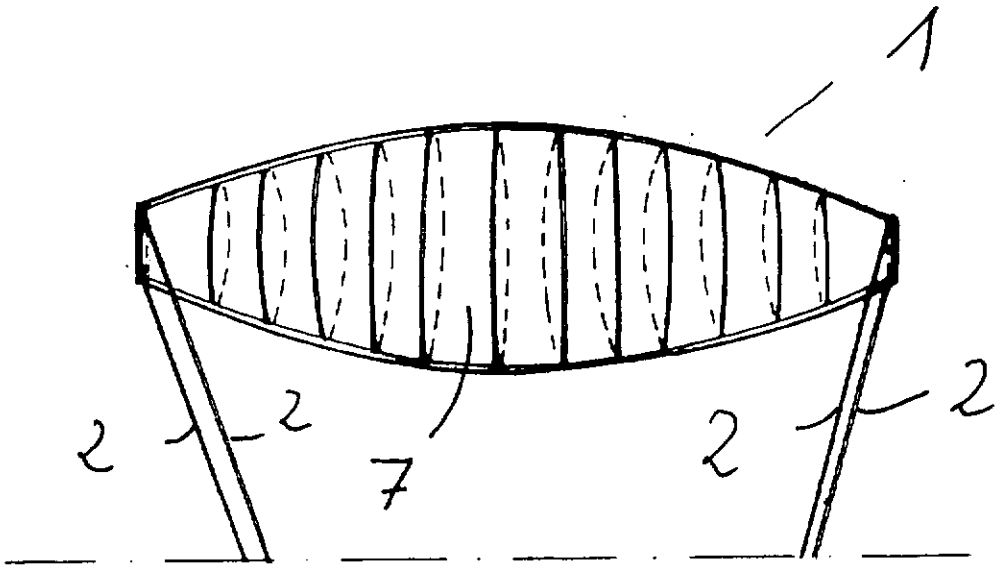

Figur 1

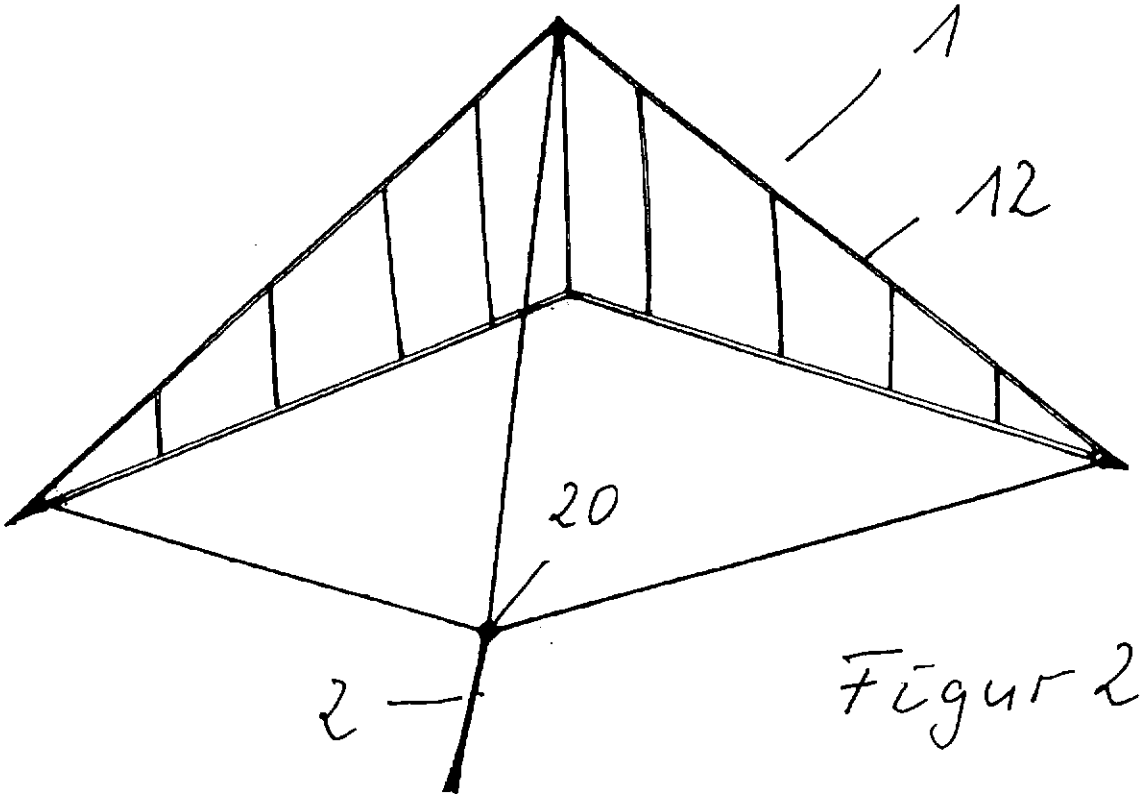

Figur 2

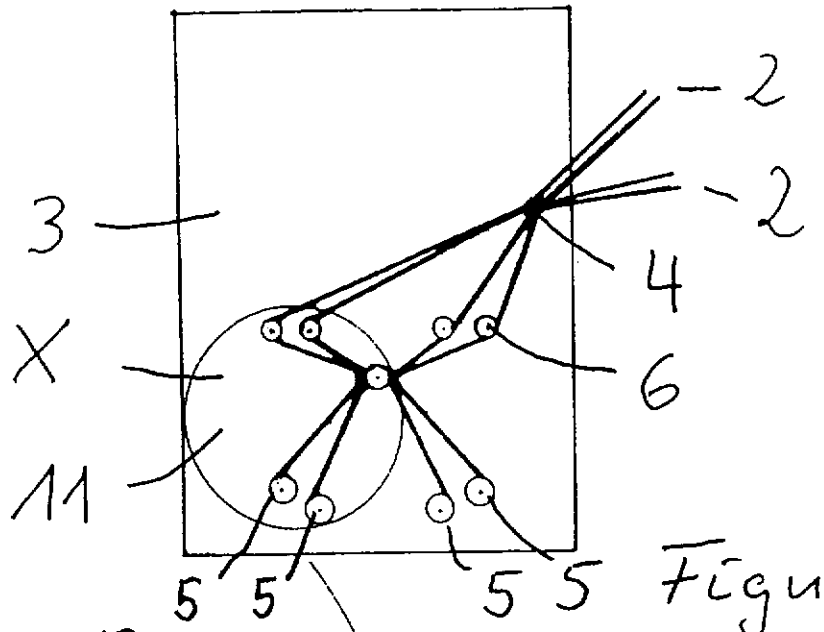

Figur 3

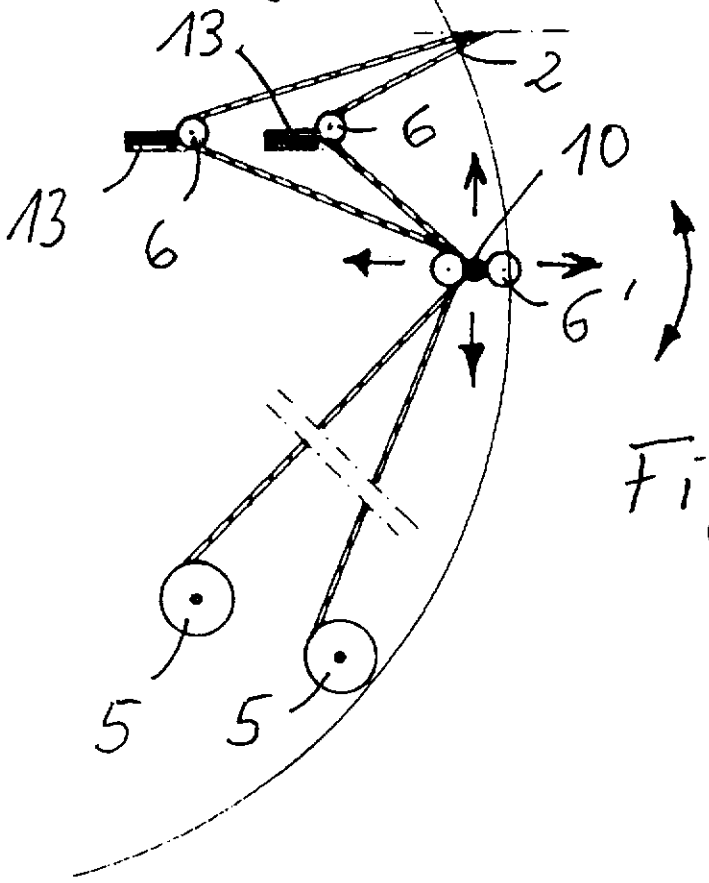

Figur 3a

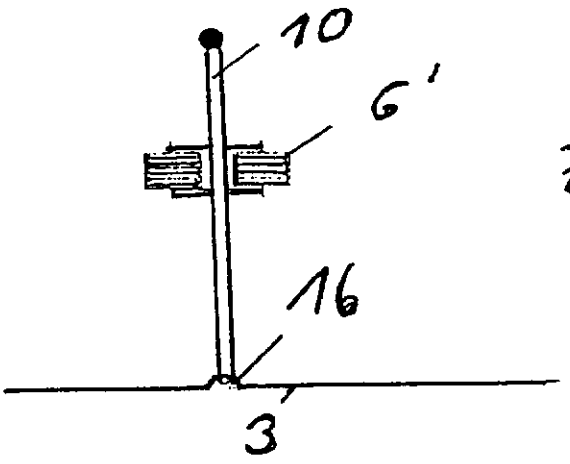

Figur 3b

5721

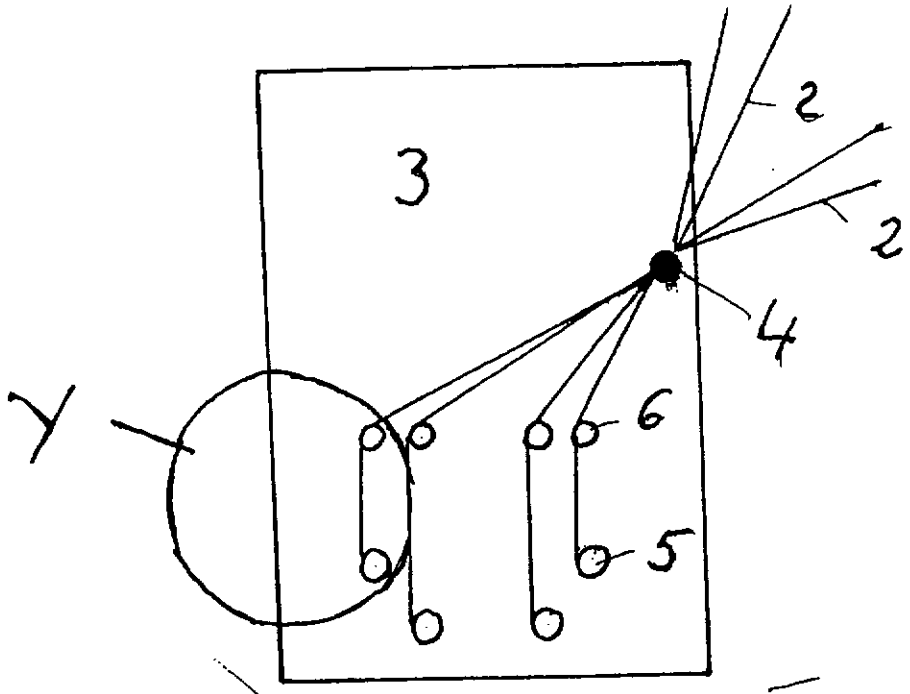

Figur 4

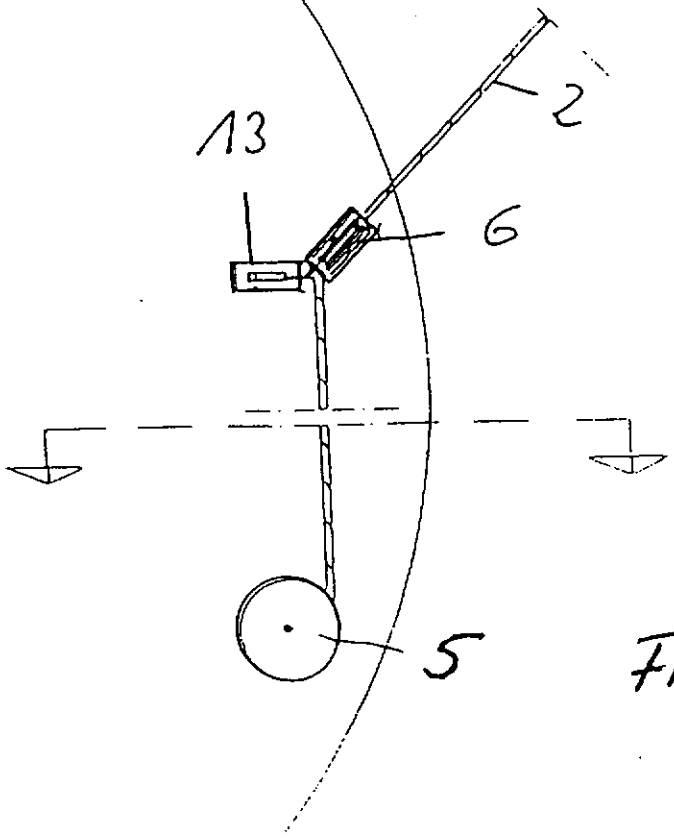

Figur 4a

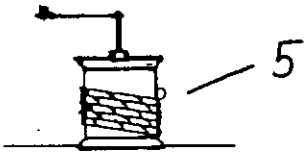

Figur 4b

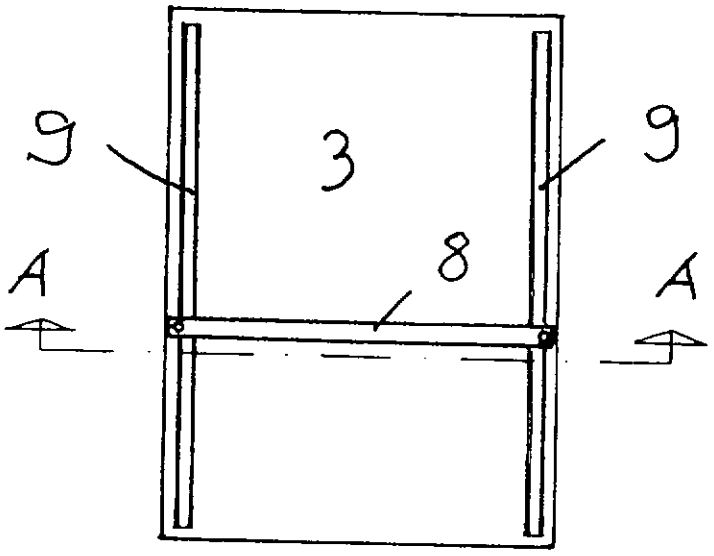

Figur 5

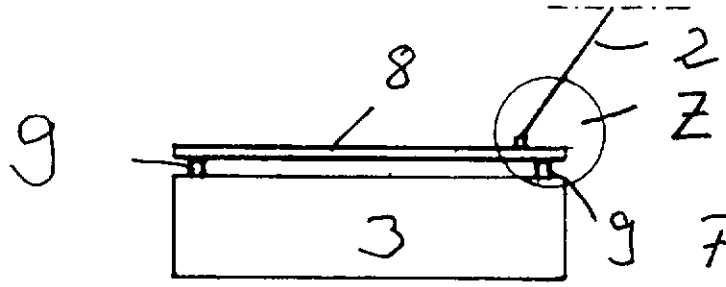

Figur 5a

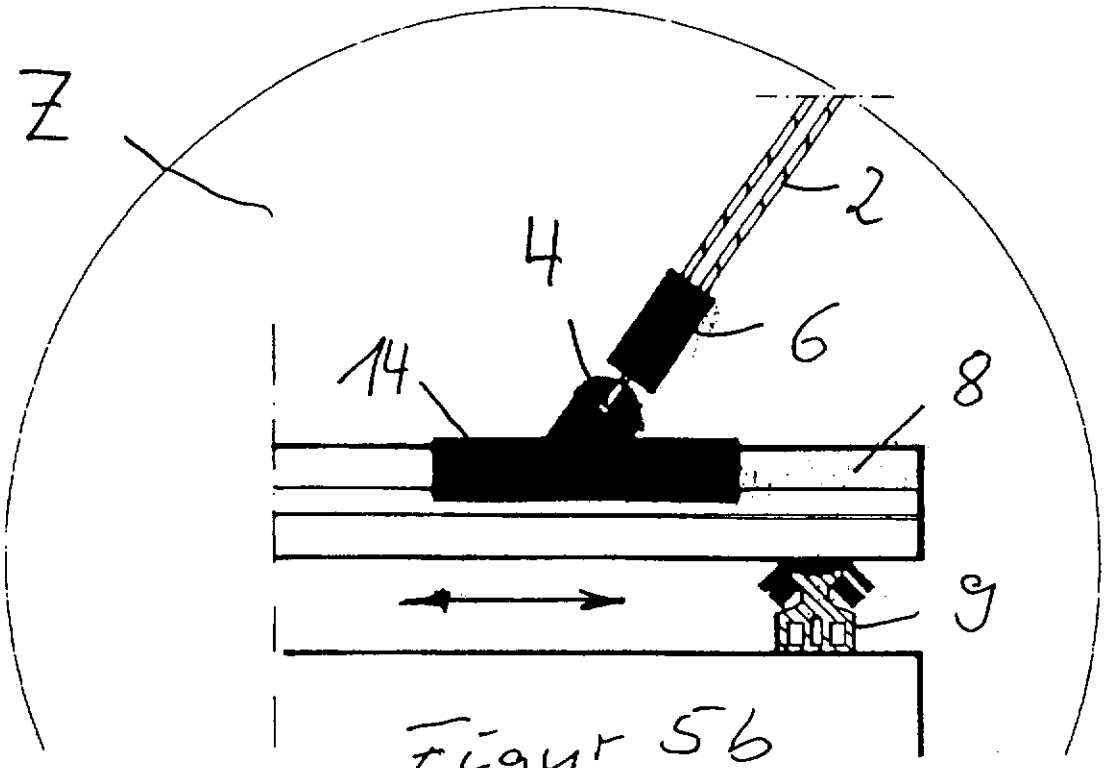

Figur 5b

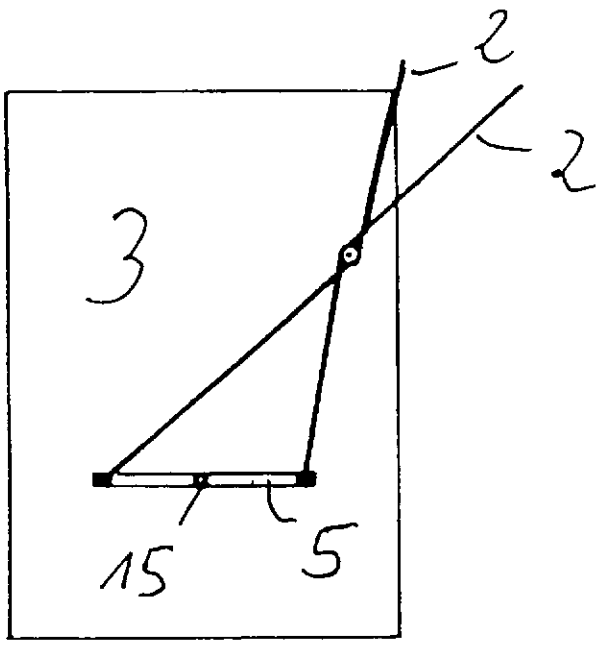

Figur 6

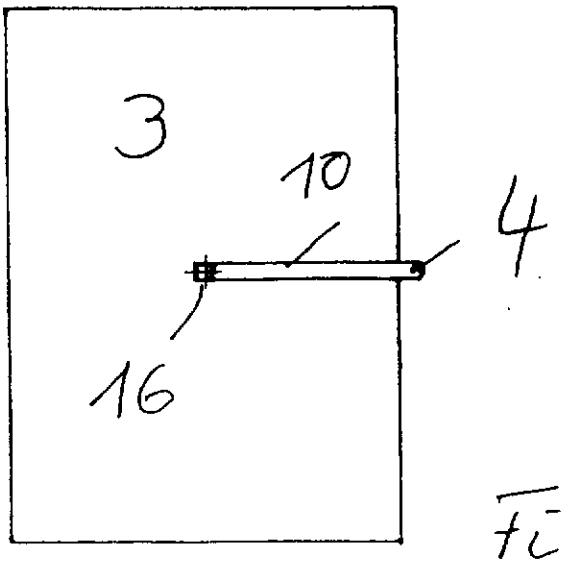

Figur 7

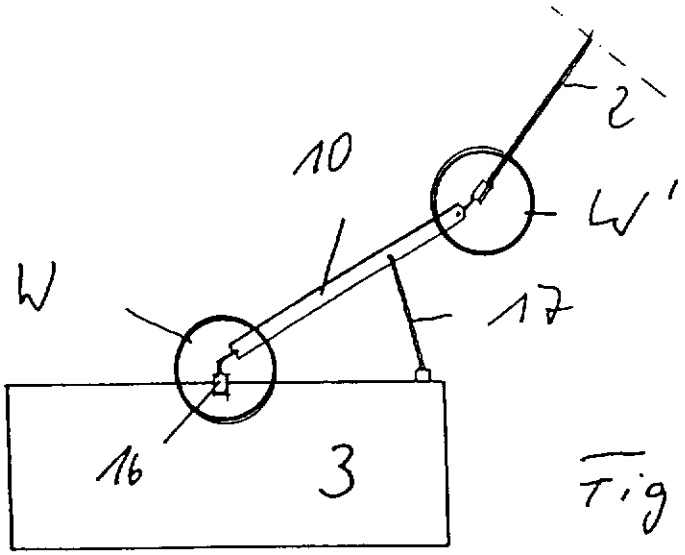

Figur 7a

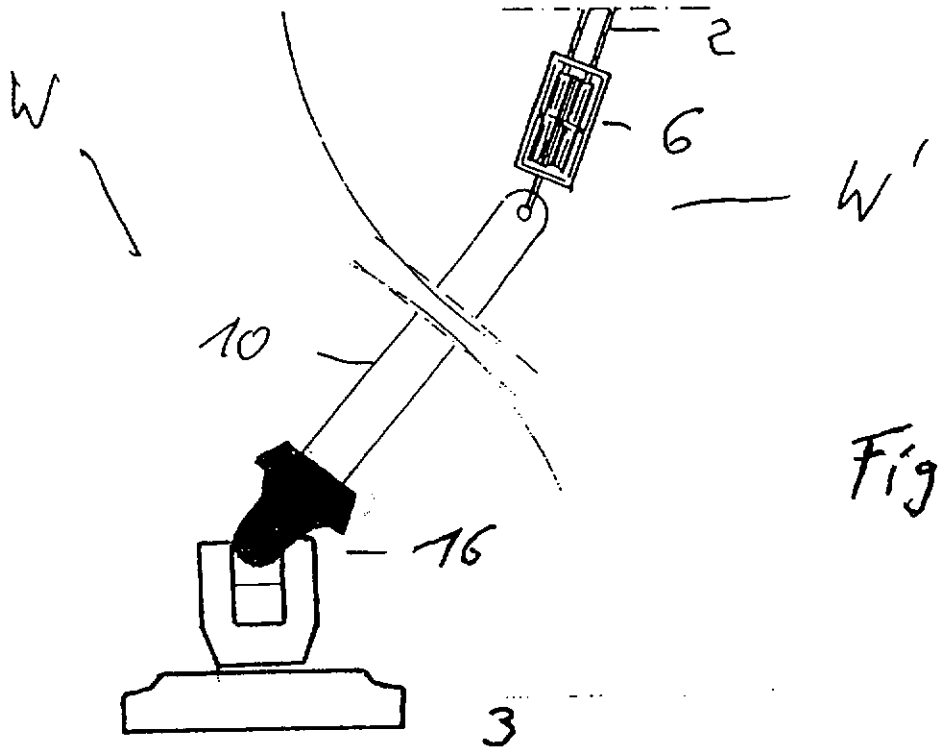

Figur 7b

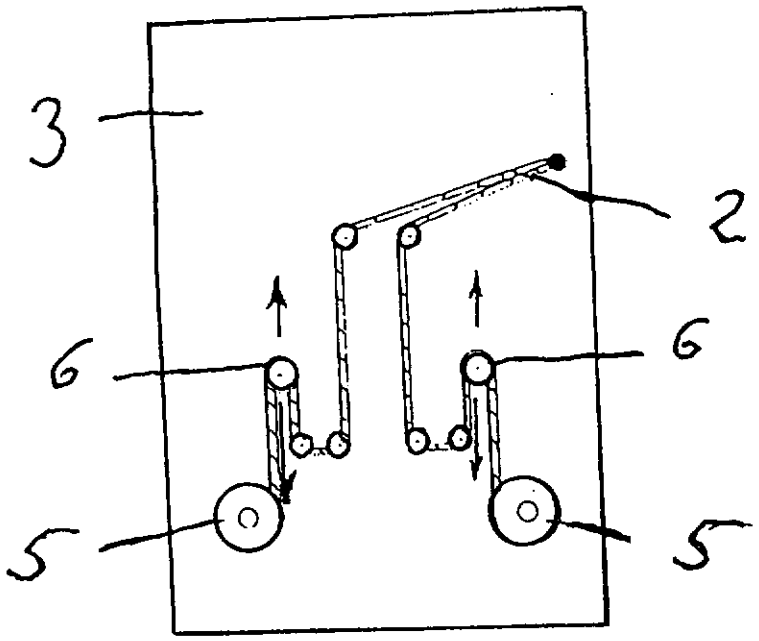

Figur 8

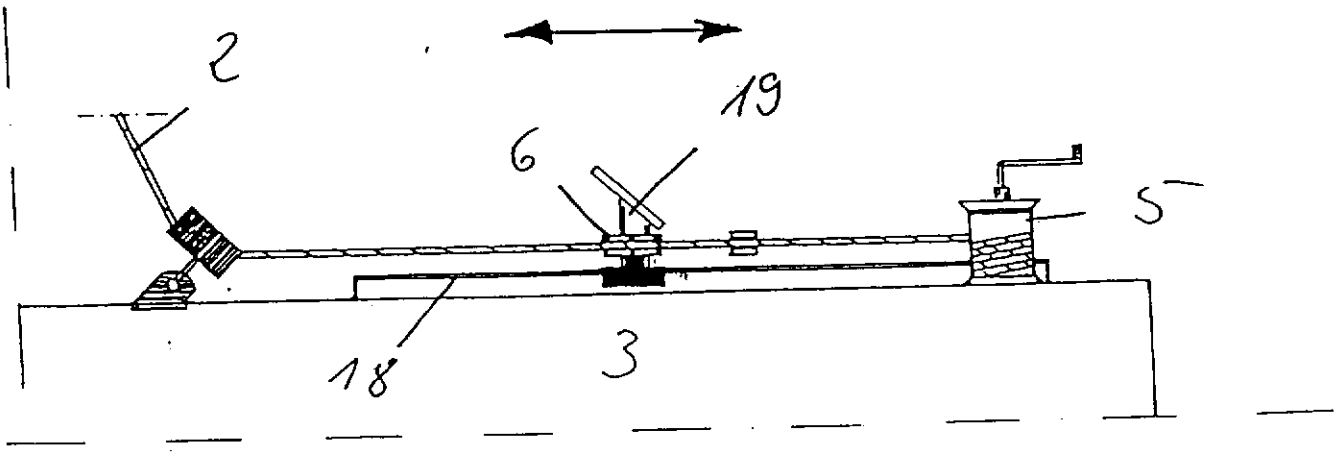

Figur 8a

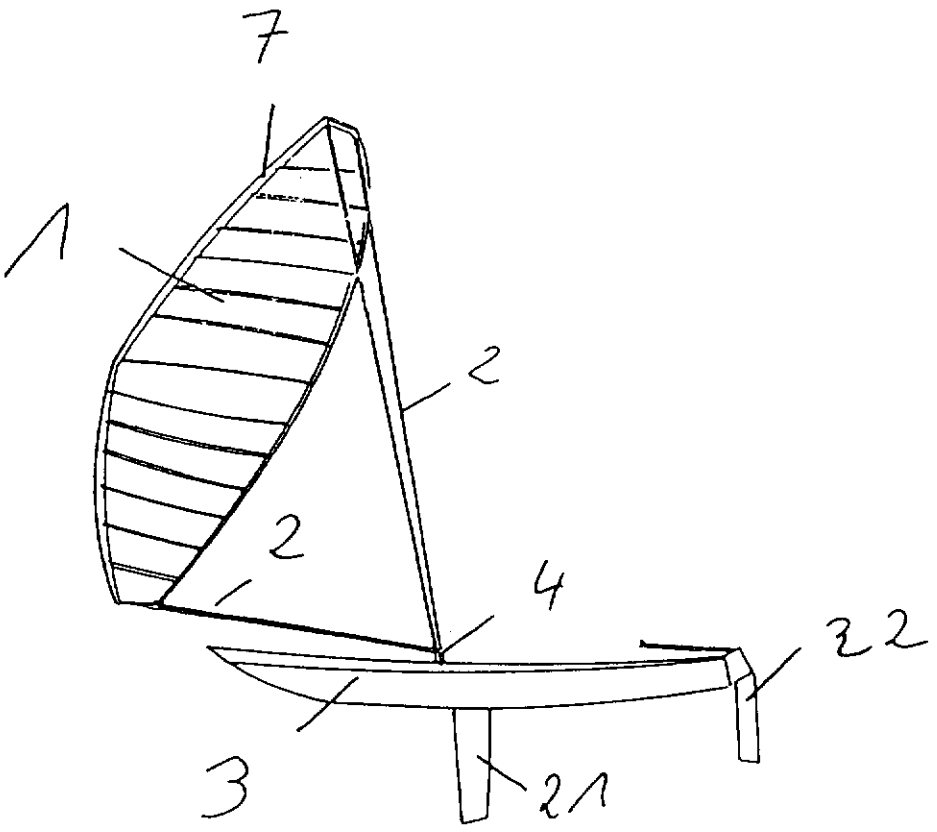

Figur 9

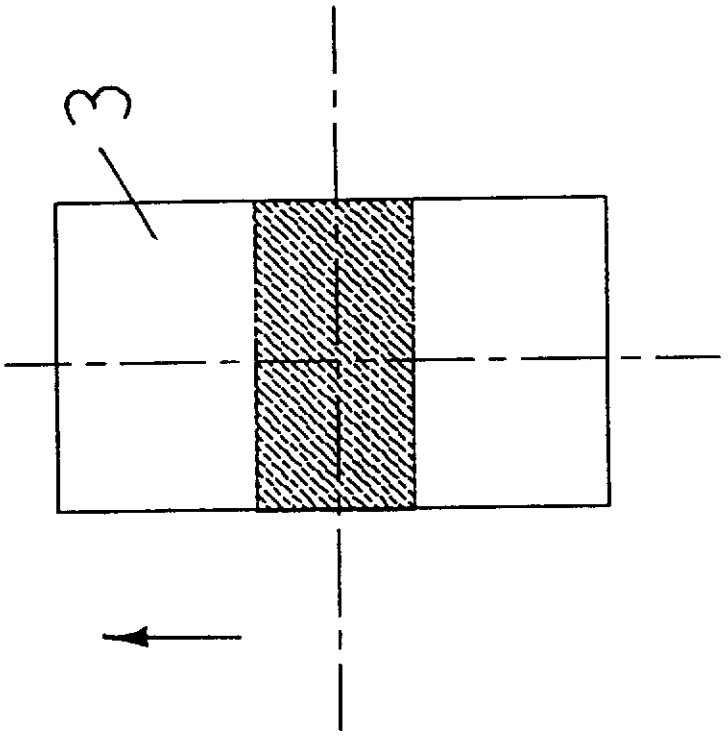

Figur 10

Figur 11

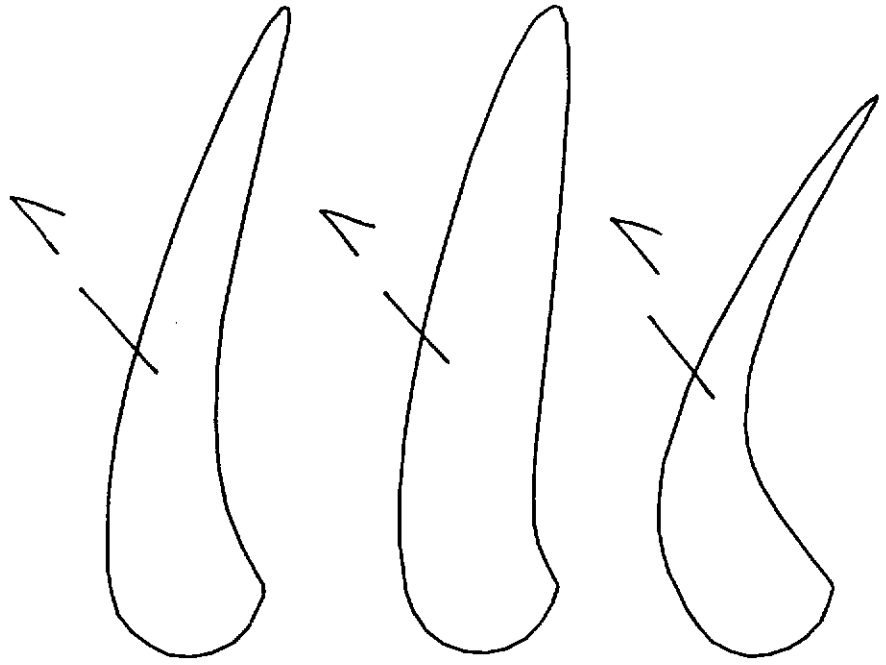

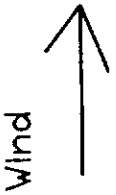

Figur 12

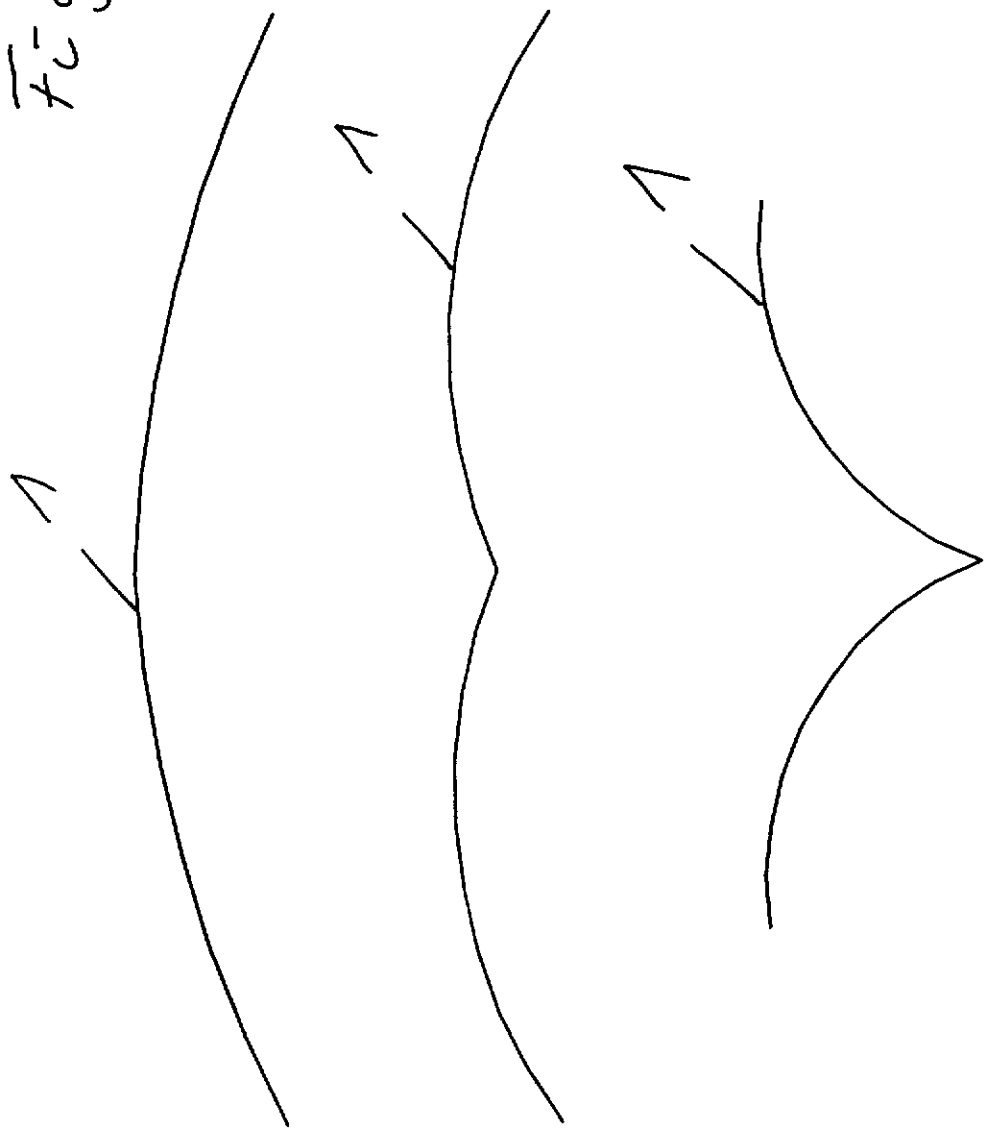

Fig 4r 13

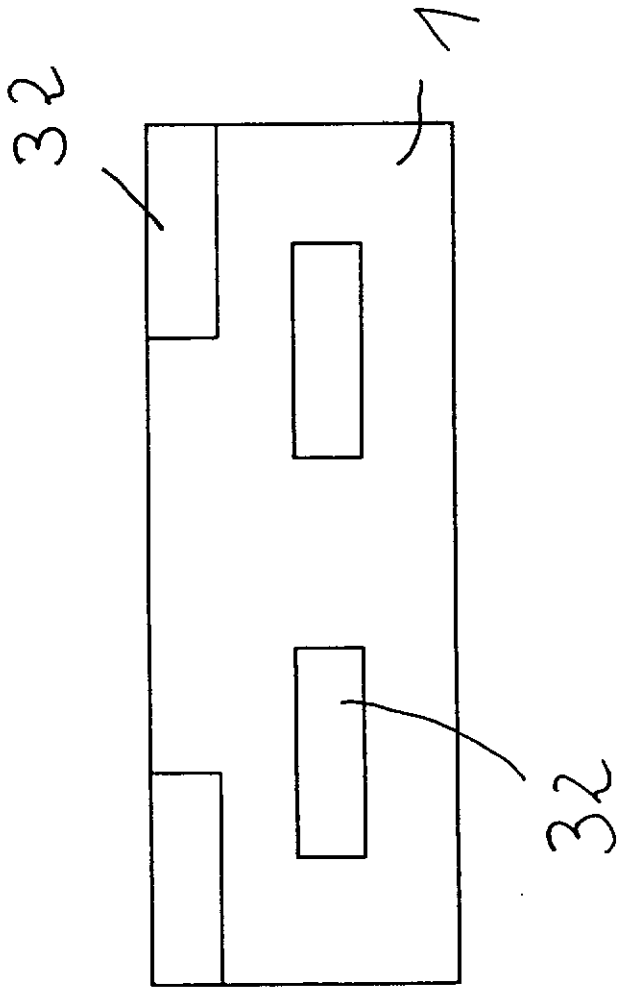

Figur 14

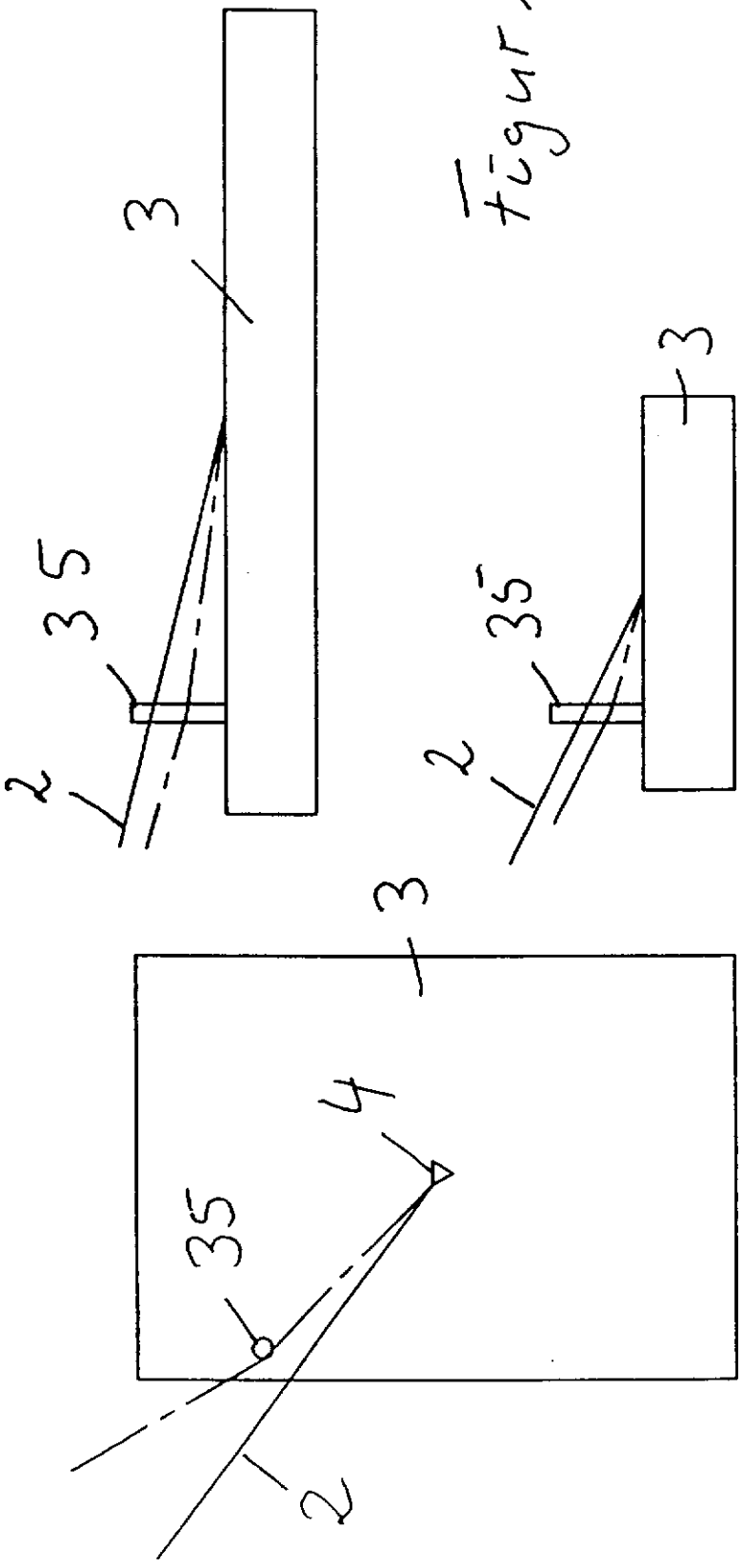

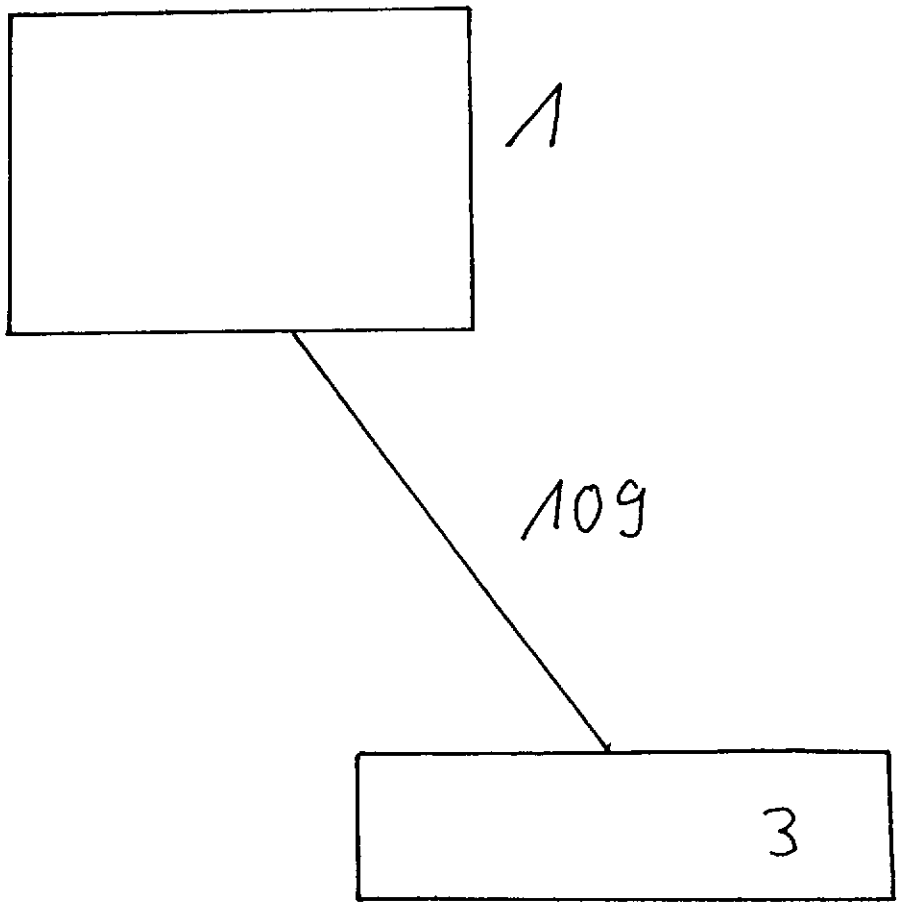

Figur 15

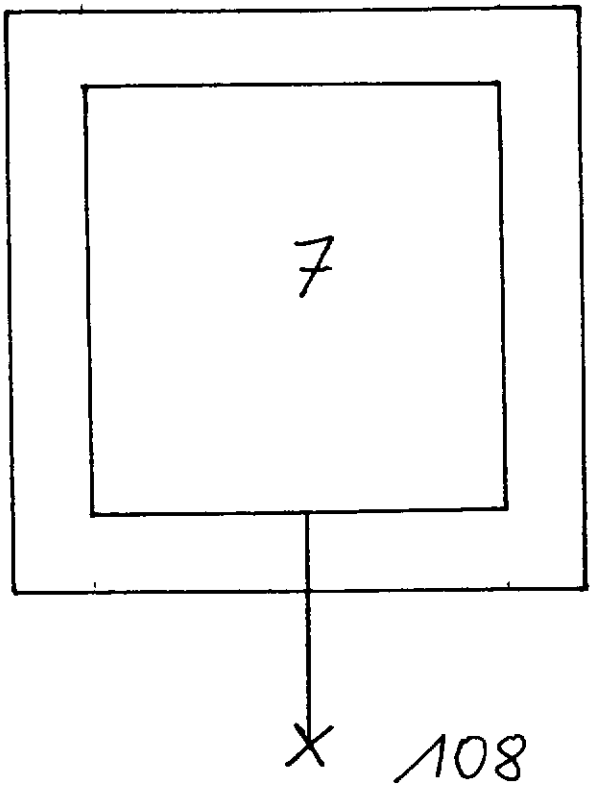

Figur 16

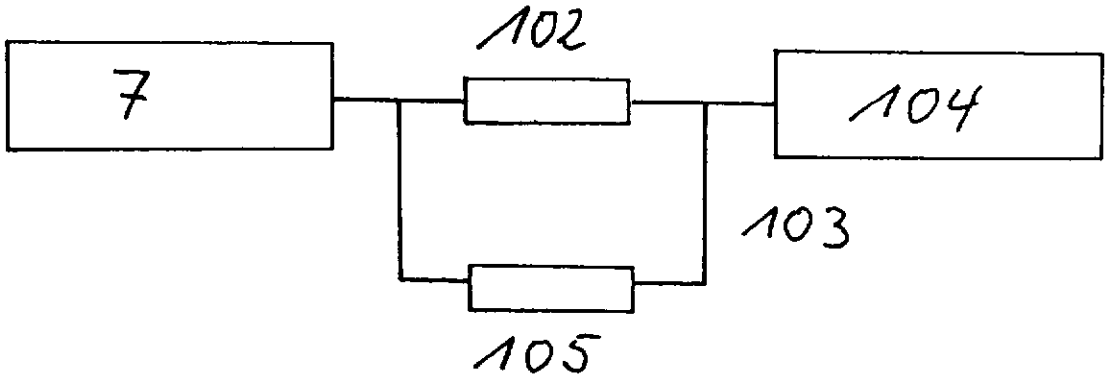

Figur 17

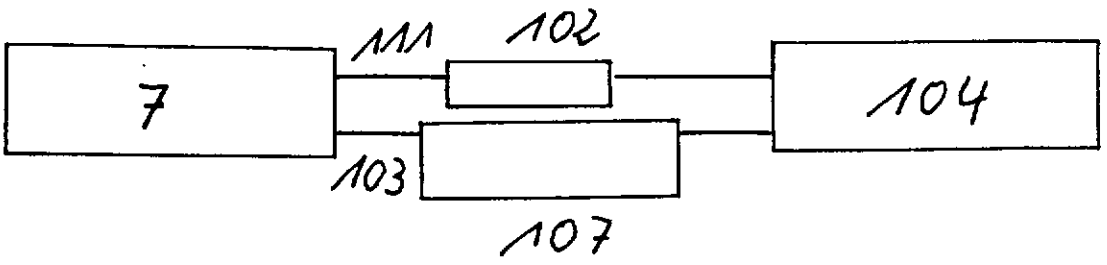

Figur 18

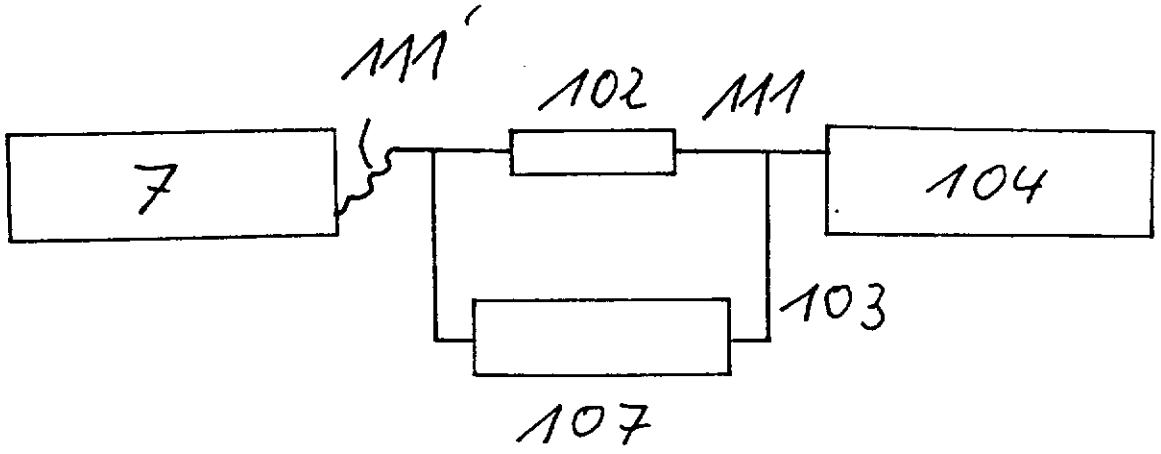

Figur 19

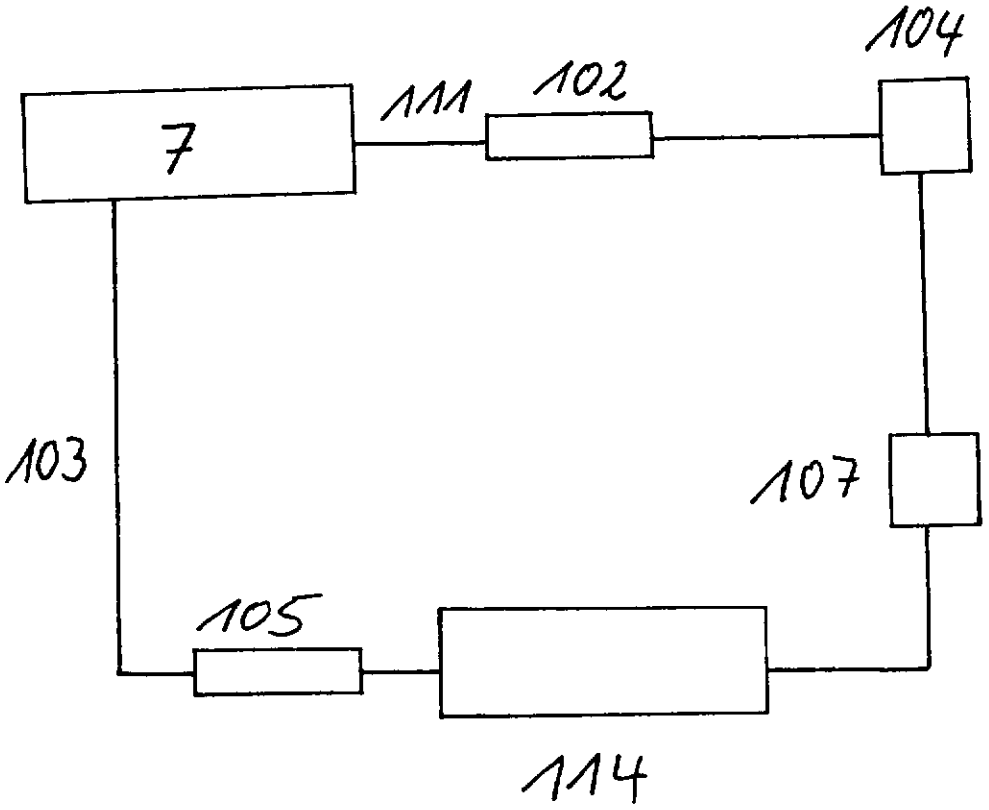

Figur 20