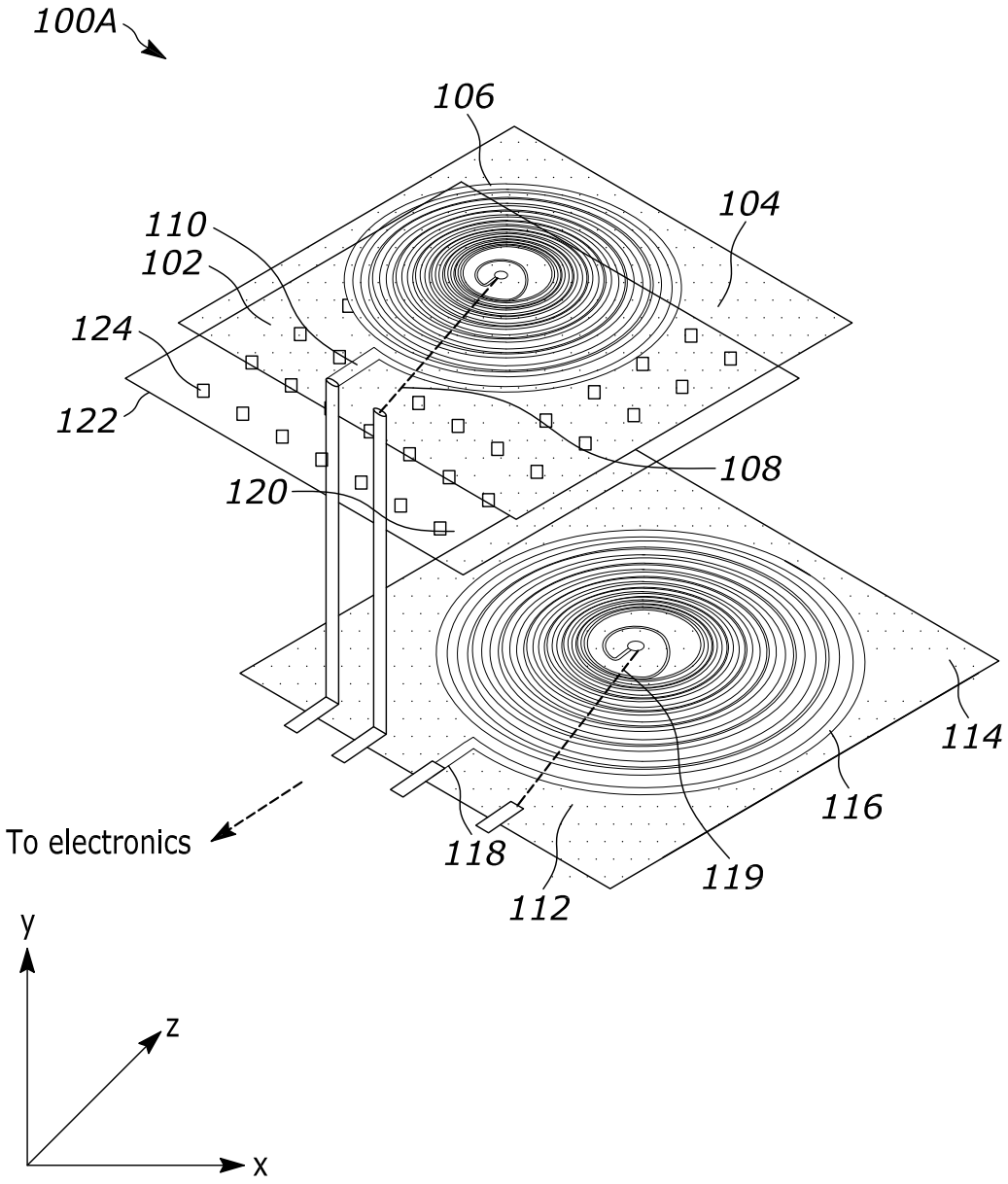
100A
106
104
110
102
124
122
108
120
114
116
118
119
112
To electronics
y
z
x

FIG. 1A

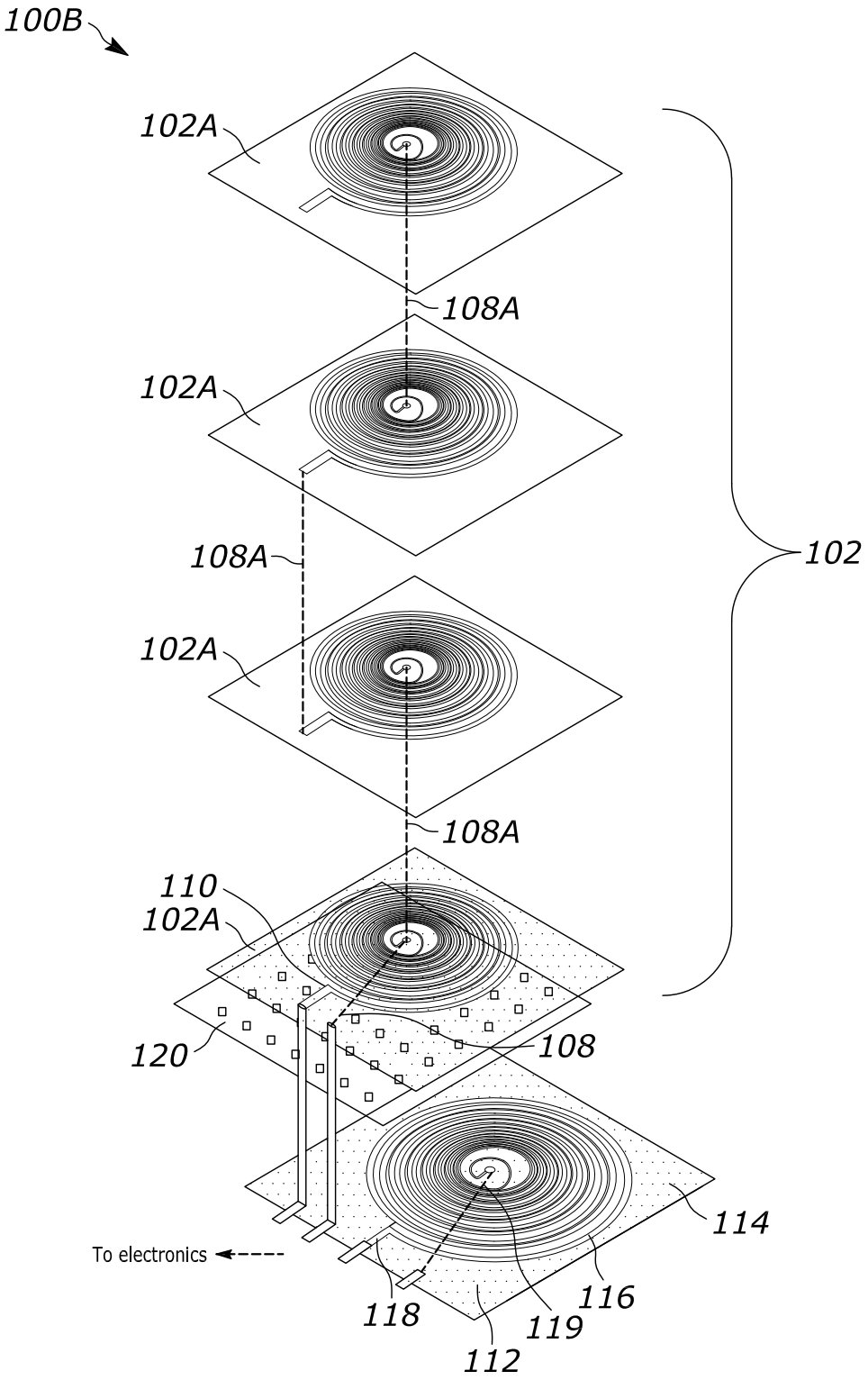
100B
102A
108A
102A
108A
102A
108A
110
102A
120
108
102
114
To electronics
118
119
116
112

FIG. 1B

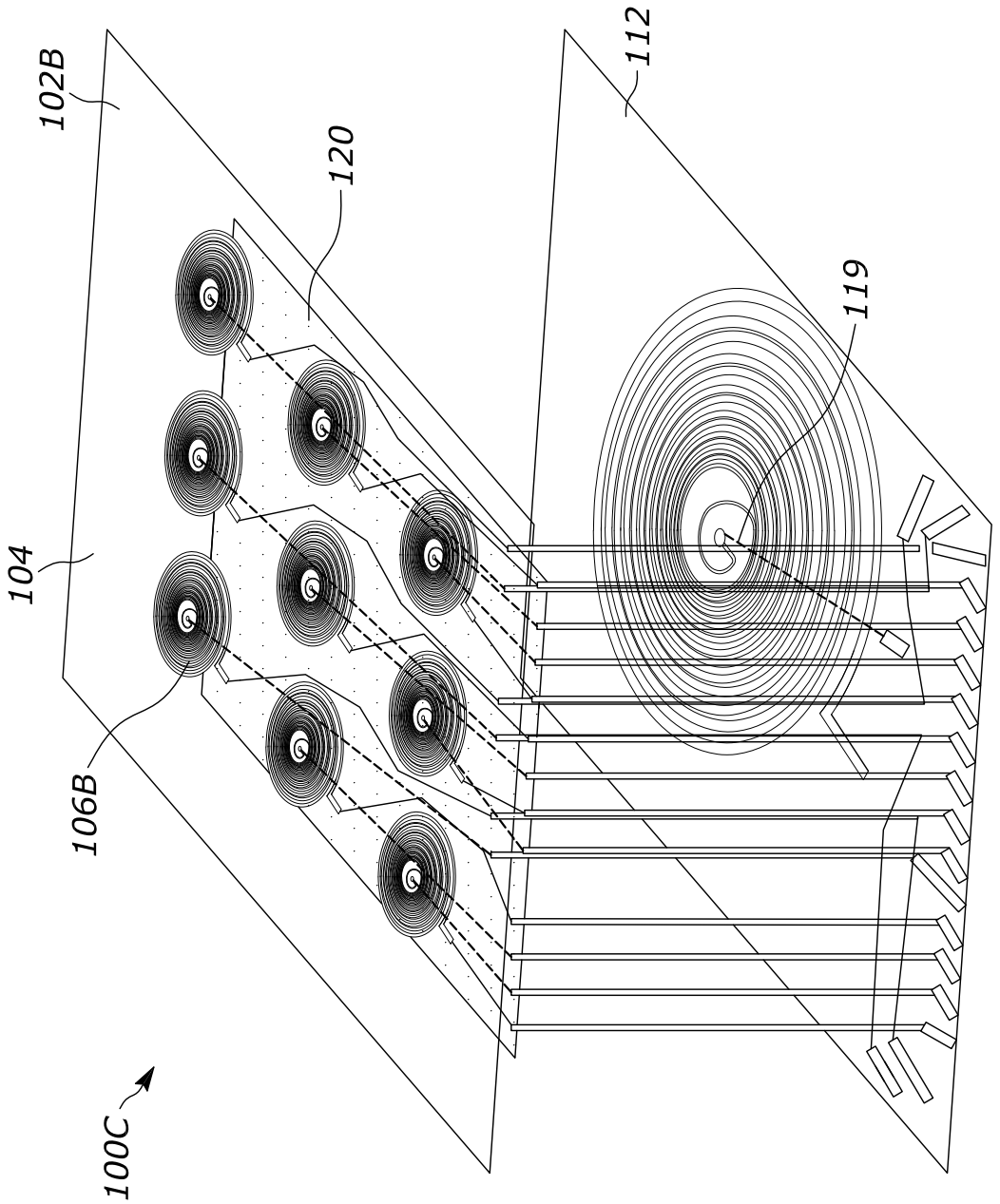

FIG. 1C

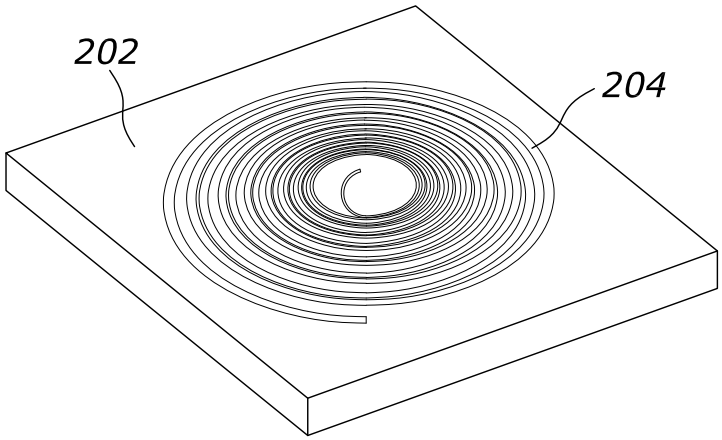

FIG. 2A

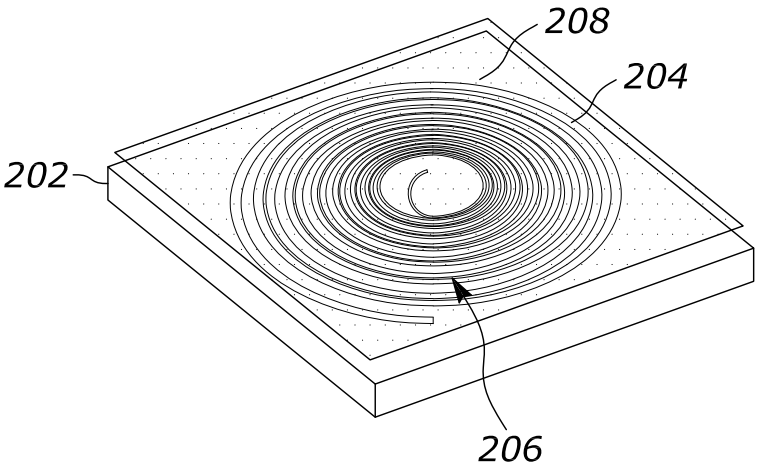

FIG. 2B

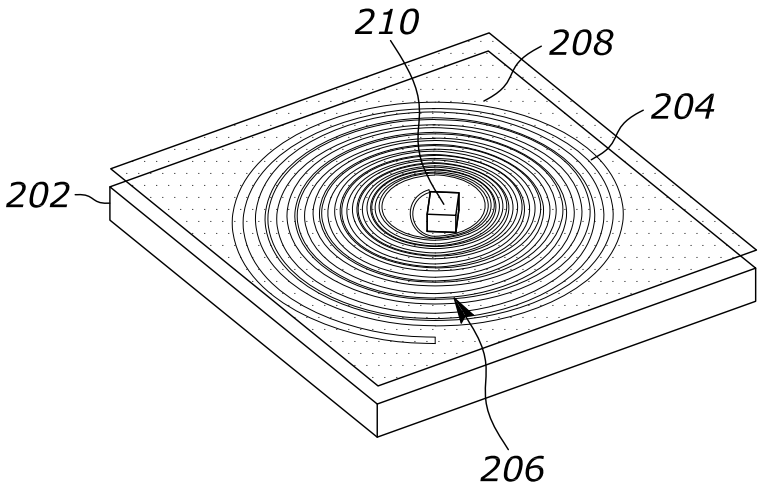

FIG. 2C

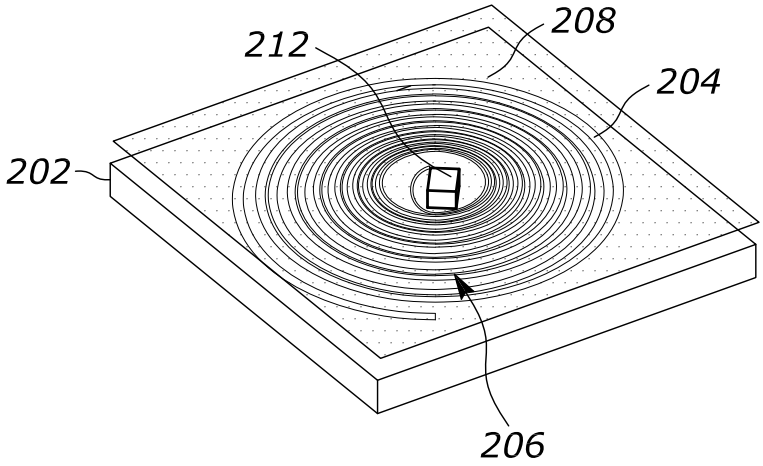

FIG. 2D

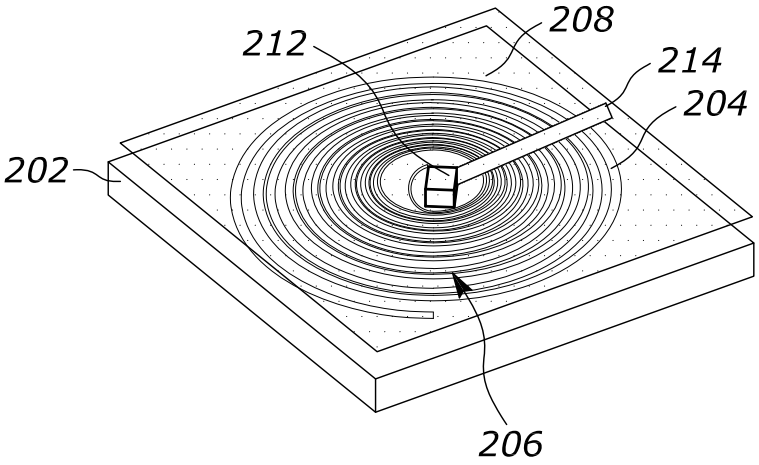

FIG. 2E

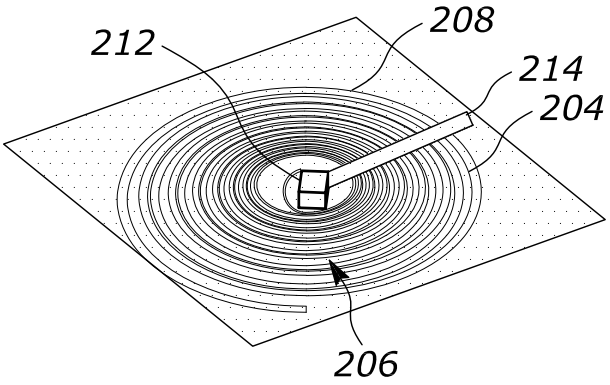

FIG. 2F

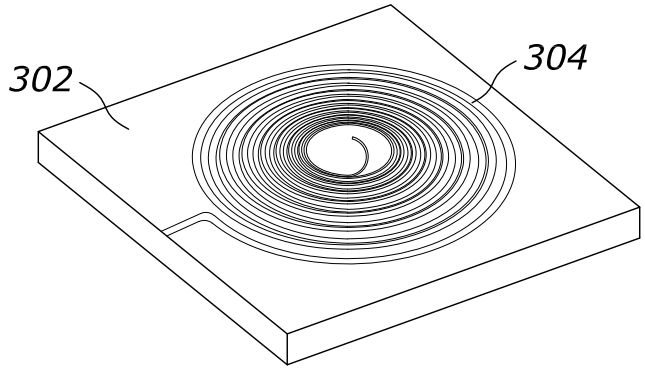

FIG. 3A

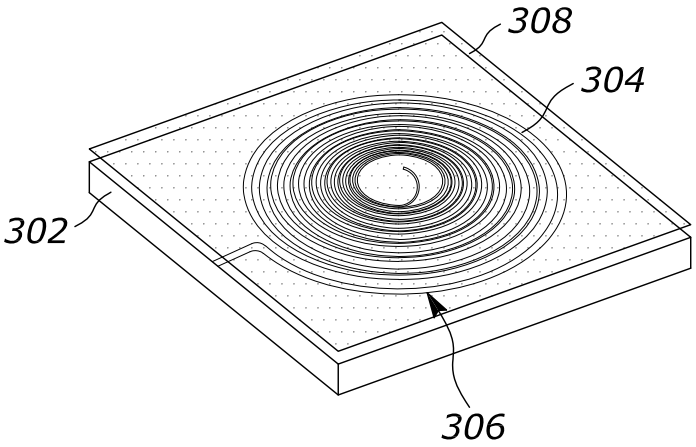

FIG. 3B

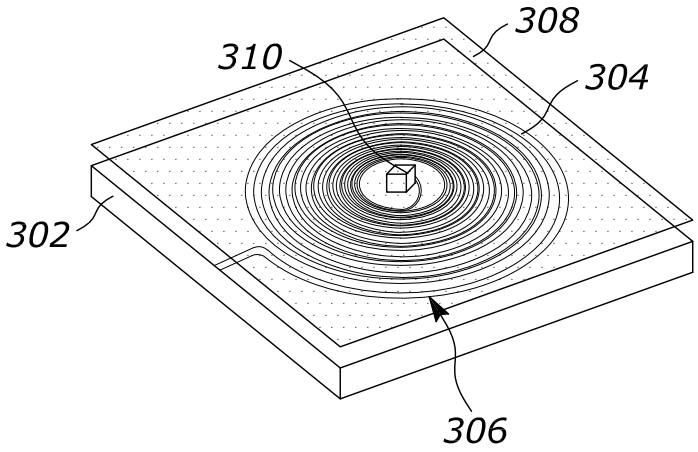

FIG. 3C

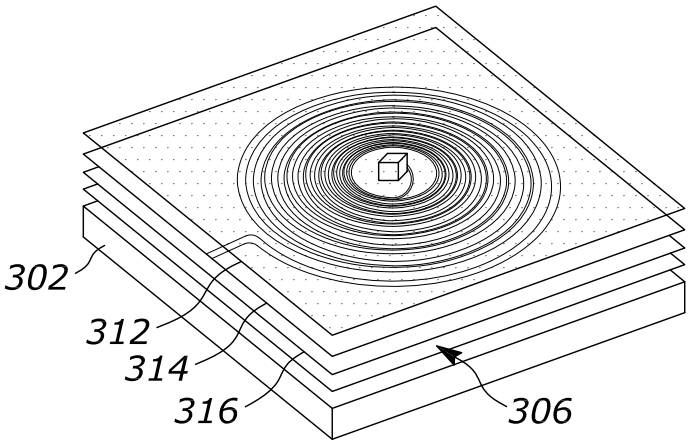

FIG. 3D

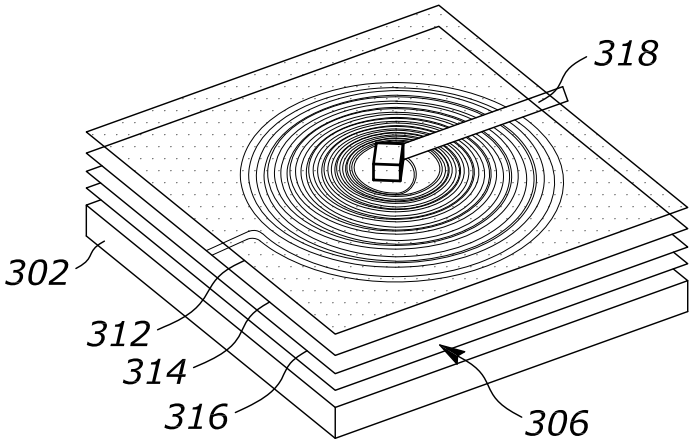

FIG. 3E

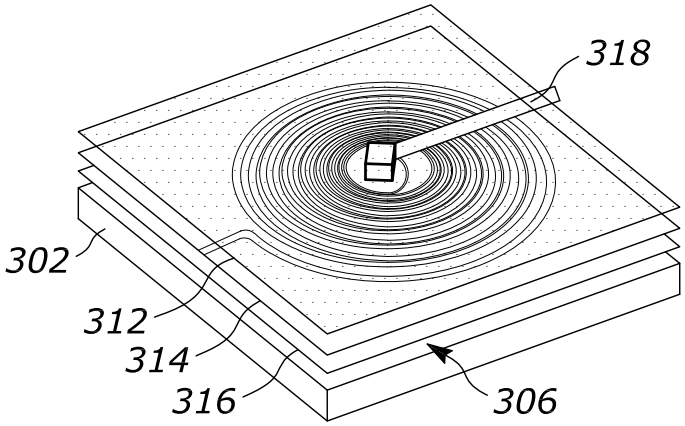

FIG. 3F

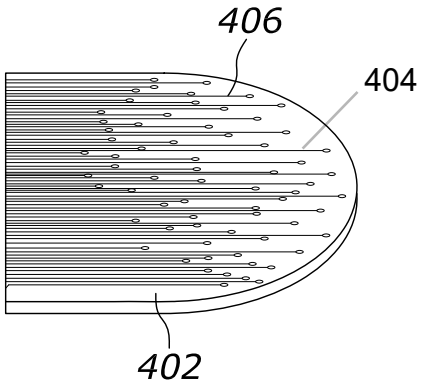

FIG. 4A

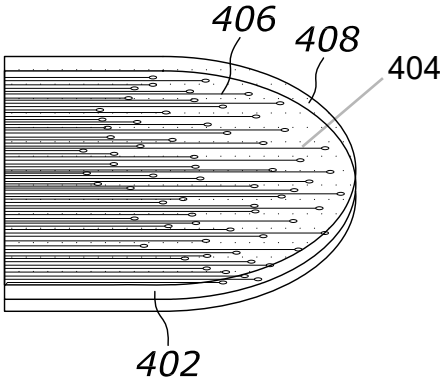

FIG. 4B

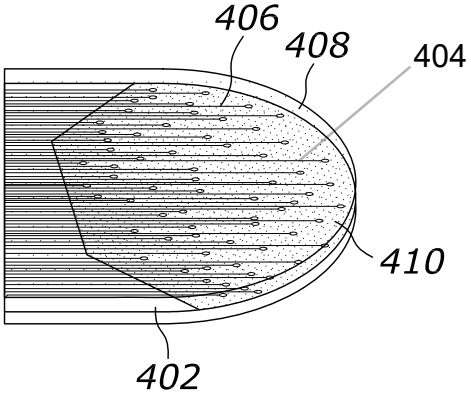

FIG. 4C

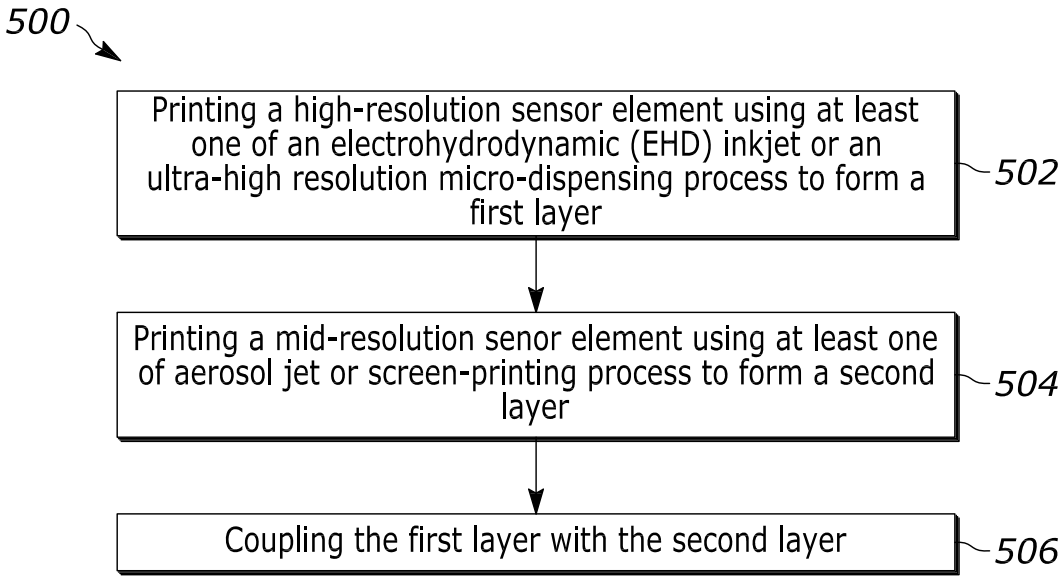
500
Printing a high-resolution sensor element using at least one of an electrohydrodynamic (EHD) inkjet or an ultra-high resolution micro-dispensing process to form a first layer
502
Printing a mid-resolution senor element using at least one of aerosol jet or screen-printing process to form a second layer
504
Coupling the first layer with the second layer
506

FIG. 5

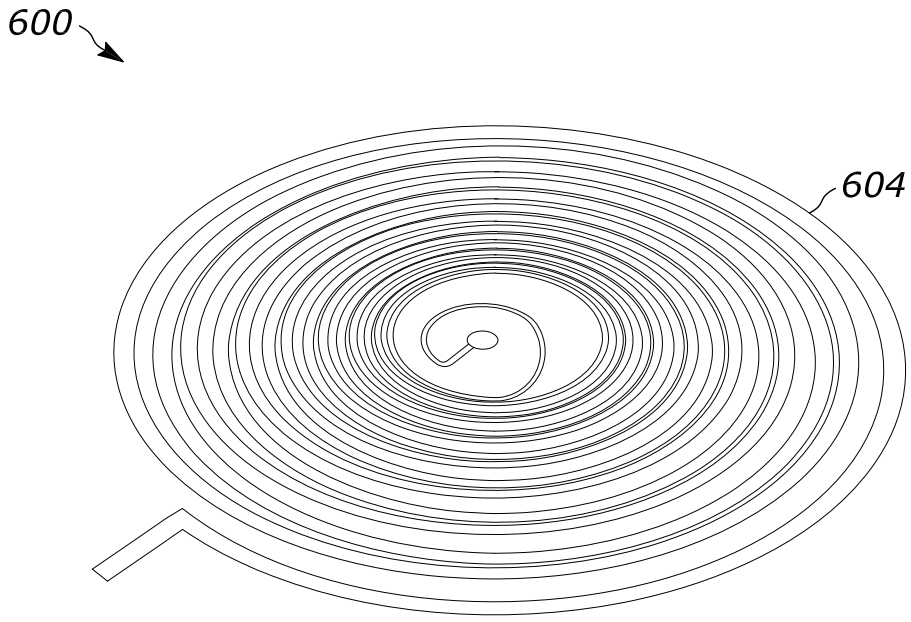
600
604

FIG. 6

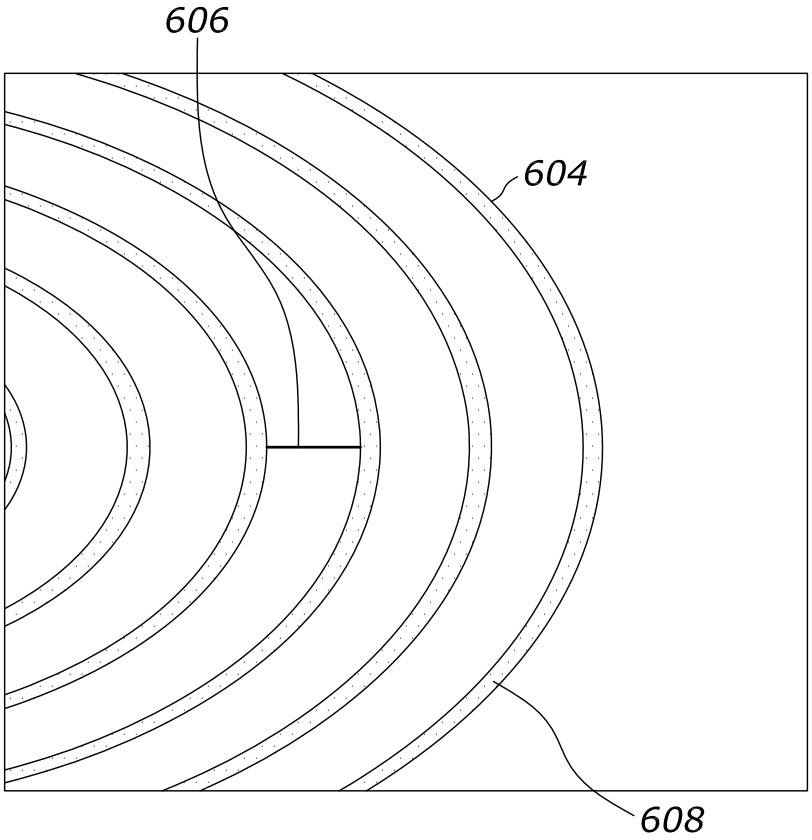

FIG. 7