9701937-6
6 JUNE 1997
IPOS copy

A LEADFRAME CARRIER

TECHNICAL FIELD

This invention relates to apparatus for transporting leadframes carrying partly formed devices during the manufacturing process. In the semiconductor industry, the manufacture of discreet or integrated component packages involves a process in which the silicon chips are attached to a leadframe. The leadframes are normally formed of copper, copper alloy or a material known as alloy 42. The leadframes are formed in elongate planar strips to which a number of components are attached. Several individual processes such as electroplating, electrolytic deflashing and other chemical processing are carried out with the components attached to the leadframes. The processes may involve continuous, or step and repeat conveyor systems to pass the leadframes through electrolytic baths, pretreatment and post treatment stations.

In particular, after the silicon chips of the components are encapsulated in moulded plastics casings the electrical contact leads require treatment by the application of a layer of tin alloy to make them suitable for soldering to circuit boards and the like. The tin alloy is deposited by an electroplating system. An arrangement is required to provide the mechanical support and electrical contact to the lead frames for this electroplating process.

BACKGROUND ART

There are three main methods for transporting leadframes for processes such as electroplating, electrolytic deflashing and other chemical processing. The first of these is what is known as a hook or basket process in which the strip form leadframes are placed into a hook or bracket arrangement in a slanting position without positive contact to the support. In the electrolytic bath, the touching contact between the leadframe and the bracket is relied upon to provide the necessary electrical connection. This results in a poor current distribution and a consequent uneven solder plating thickness. Additionally, this process is not suitable for electrolytic deflashing which involves a high pressure water jet being directed at the leadframe. In another known process the leadframes are gripped from the top by a clamp on

a flexible conveyor belt without any bottom support. As a consequence, leadframes are frequently dropped from the conveyor. Additionally, the leadframes used in the conveyor system are weight limited, a minimum rail space is required for gripping and special lead frames requiring top and bottle contact cannot be used. The third known arrangement is a carrier or jig configuration in which individual leadframes are clamped in a vertical position above a number of plastic wheels by downwardly directed mobile metal forks. These systems are loaded by placing the leadframe into grooves formed in the wheels and lowering the forks to hold the frame in position and also provide the electrical contact to the frames. The disadvantage with this technique is that the machine throughput capacity is low compared to the other two methods.

DISCLOSURE OF THE INVENTION

It is an object of this invention to provide a leadframe carrier which will overcome, or at least ameliorate one or more of the forgoing disadvantages.

Accordingly, in one aspect this invention provides a leadframe carrier for transporting two elongate and generally planar leadframes in a horizontally extending and vertically aligned configuration, said carrier comprising a plurality of lower carrier elements to engage a lower longitudinal edge of a first lower leadframe; a plurality of intermediate carrier elements to engage an upper longitudinal edge of said first leadframe and a lower longitudinal edge of a second upper leadframe; a plurality of upper carrier elements to engage an upper longitudinal edge of said second leadframe; positioning means to locate said respective upper, intermediate and lower carrier elements in vertically spaced apart generally linear arrays; and selectively operable clamping means to close the spacings between said linear arrays to engage said carrier elements with respective longitudinal edges of said first and second leadframes and captively retain said leadframes in substantially vertical alignment, at least some of said carrier elements providing electrical connection to one or both of said first and second leadframe.

Preferably, at least some of the carrier elements each include a fork arrangement to

engage the respective longitudinal edges. The fork arrangement is preferably formed by a V-shaped groove.

In one form of the invention the intermediate carrier elements each include two fork arrangement oriented in opposite directions so that one can engage the upper leadframe and the other, the lower leadframe. It is desirable in some applications for at least some of the carrier elements to make electrically insulating contact with one or both of the leadframes. For example, the lower carrier elements can make electrically insulating contact with the lower leadframe by being formed as grooved plastic wheels.

The upper, intermediate and lower carrier elements are preferably mounted on vertically depending members. In the preferred form of the invention the depending members are stainless steel rods. The weight of at least some of the carriers and corresponding rods can be used to captively retain the leadframes.

In the preferred form of the invention the lower carrier elements are fixed in position and the upper and intermediate carrier elements are moved by the clamping means to effect captive retention of the leadframes. The configuration results in the leadframe holding reference being the lower carrier elements. Consequently, no adjustment is required to accommodate differing lead frames being subjected to the same processes.

The leadframe carrier according to this invention provides a number of advantages over the prior art arrangements. In particular, the leadframes are vertically oriented with a positive electrical contact. This provides a symmetric configuration and a consequential better uniformity of coating. The leadframe carrier of this invention is suitable for use in electroplating, electrolytic deflashing and other chemical processes. The carrier of this invention is also not subject to the problems of frame drop and does not have the limitation of minimum gripping rail requirements of prior art arrangements. In addition, the carrier of this invention can provide for top and bottom contact of special leadframes. The configuration of the carrier according to this invention also offers the advantage of easy

replacement of individual carrier elements without replacement of an entire conveyor and the monitoring of the individual contact of each carrier element with the leadframe.

The ability to carry two lead frames also doubles the throughput capacity of the machine in comparison to previously used carrier or jig arrangements.

One embodiment of the invention will now be described, by way of example only, with reference to the accompanying drawings.

BRIEF DESCRIPTION OF THE DRAWINGS

Figure 1 is a schematic elevation of a leadframe carrier according to this invention;

Figure 2 is a schematic end view of the carrier shown in figure 1;

Figure 3 is a schematic end view of an electrolytic bath in which the carrier of figure 1 is used; and

Figures 4a to 4f are sequential views similar to Figure 2 schematically additionally showing a loading arm loading the leadframe carrier with two leadframes.

BEST MODE FOR CARRYING OUT THE INVENTION

Referring to figures 1 and 2, the leadframe carrier 10 carries a first lower leadframe 11 and a second upper leadframe 12. The leadframes 11, 12 are of strip form, that is elongate and generally planar, and have a series of mounted integrated circuit components 13. A number of lower carrier elements in the form of plastics wheels 14 are mounted the end of depending stainless steels rods 15. The plastics wheels 14 have a central V-shaped groove 16 to engage a lower longitudinal edge 17 of lower leadframe 11. The wheels 14 provide an electrically insulating contact with the leadframe 11 and also provide for insulation of the carrier assembly from the base of a electrolytic bath as described below.

A number of intermediate carrier elements 18, 19 are similarly mounted on depending stainless steel rods 15. The intermediate carrier elements 18, 19 are of two distinct types. Carrier elements 19 are shown in figure 2 and comprise two oppositely orientated fork arrangement defined by V-shaped grooves 20, 21. The V-shaped groove 21, engages an upper longitudinal edge 22 of the lower leadframe 11, whilst the V-shaped groove 20 engages the lower longitudinal edge 23 of upper leadframe 12. The carrier element 18 is generally similar except that it has only a downwardly directed V-shaped groove and thus engages only the upper longitudinal ledge of 22 of lower leadframe 11.

A number of spaced apart upper carrier elements 24 are also mounted on depending stainless steel rods 15. The upper carrier element 24 is best seen in Figure 2 and comprises a downwardly oriented fork arrangement formed by a V-shaped groove 25. V-shaped groove 25 engages the upper longitudinal edge 26 of upper leadframe 12. The upper carrier elements 24, intermediate carrier elements 18, 19 and lower carrier elements 14 are each arranged in vertically spaced apart generally linear arrays. The respective rods 15 are off-set by differing amounts, as best seen in Figure 2, to avoid interference between the rods. The leadframes 11, 12 are clamped between the carriers 14, 18, 19, 24 by closing the spacing between the arrays of carriers. This is achieved by appropriate corresponding vertical movement of the rods 15 by a mechanical arrangement (not shown). It will be apparent that the mechanical arrangement can be of any suitable known type able to control the reciprocating movement of a number of depending parallel steel rods.

The number of rods and carrier elements used in the leadframe carrier depends upon the desired length of the leadframe that is to be accommodated. In the preferred form of the invention, the rods 15, supporting the lower carriers or plastic wheels 14, are held fixed and the rods 15 supporting intermediate carrier elements 18, 19 and upper carrier elements 24 are moved to effect the clamping of the leadframes 11, 12 in position. This will be described in further detail with reference to Figures 4a to 4f. In the configuration illustrated in the drawings electrical contact to the leadframes 11, 12 is provided by at least intermediate carrier element 18 and upper carrier element 24. Electrical contact can also be provided by carrier

elements 19 which contact both of leadframes 11 and 12. The supply of electrical current is by connection of appropriate electrical system (not shown) of known type to the stainless steel rods 15 of the selected carrier.

In the preferred form of the invention a positive clamping force does not need to be applied to the stainless steel rods 15. Rather, the rods 15 supporting the lower carrier elements or wheels 14 are fixed in position and the remaining rods 15, that is those supporting the upper carrier elements 24 and intermediate carrier elements 18, 19 are suspended so that their weight acts to captively retain the leadframes 11, 12.

Figure 3 shows a typical electrolytic bath in which the leadframe carrier of the present invention is used. The major components of the bath are a supply volume of solution 27, a working solution volume 28 into which the solution is pumped from the supply 27 and allowed to overflow as shown by the arrows to maintain a desired solution level 29. Node baskets 30 contains a supply of plating material and is connected with a source of electrical potential (not shown) via connections 31. The leadframe carrier 10 suspends two leadframes 11, 12 in the solution. The rods 15 are connected to the electrical source (not shown) so that the potential is supplied between anode material and the leadframe in the known manner.

Figures 4a to 4f, show the manner in which the leadframes 11, 12 are loaded to the leadframe carrier 10 of the invention. It will be appreciated that the leadframes are normally mounted on the carrier 10 from an appropriate storage magazine (not shown) and after treatment are stored in a similar magazine (also not shown). Figure 4a shows a clamping arm 32 which is horizontally disposed and includes a clamping slot 33. A clamping actuator 34 is attached to the arm 32 to selectively close slot 33 thus clamping leadframes within the slot. As shown in Figure 4b the leadframes 11, 12 are moved into selected spaced apart positions within slot 33. This can be achieved either manually or by an automated operation. The indexing of the positions of leadframes 11 and 12 within the slot 33 can be by way of a mechanical notch of the like or, by suitable optic sensing or any other known method. Once

in position the leadframes 11, 12 are clamped by operation of clamping actuator 34. At the same time the rods 15 attached to intermediate carriers 18, 19 and upper carrier 24 are moved to open the spacing between the carriers 15, 18, 19, 24. Figure 4c shows the arm 32 being swung through an arc (the detail of the mechanical arrangement is omitted for clarity) to position leadframes 11, 12 in the spacings respectively between carrier elements 24 and 19, and between 19 and 14.

In Figure 4d the clamping elements are moved into engagement with leadframes 11, 12 by downward movement of the appropriate two rods 15. Figures 4e and 4f show the release of clamping mechanism 34 so that the arm 32 can be withdrawn and returned to its loading position. It will be apparent that a number of loading arms are 32 are arranged along the length of the lead frame carrier so as to fit into the spacing between adjacent ones of rods 15.

The forgoing describes only one embodiment of this invention and modifications can be made without departing from the scope of the invention.

CLAIMS

1. A leadframe carrier for transporting two elongate and generally planar leadframes in a horizontally extending and vertically aligned configuration, said carrier comprising a plurality of lower carrier elements to engage a lower longitudinal edge of a first lower leadframe; a plurality of intermediate carrier elements to engage an upper longitudinal edge of said first leadframe and a lower longitudinal edge of a second upper leadframe; a plurality of upper carrier elements to engage an upper longitudinal edge of said second leadframe; positioning means to locate said respective upper, intermediate and lower carrier elements in vertically spaced apart generally linear arrays; and selectively operable clamping means to close the spacings between said linear arrays to engage said carrier elements with respective longitudinal edges of said first and second leadframes and captively retain said leadframes in substantially vertical alignment, at least some of said carrier elements providing electrical connection to one or both of said first and second leadframe.

2. A leadframe carrier as claimed in claim 1 wherein at least some of said carrier elements each include a fork arrangement to engage the respective longitudinal edges.

3. A leadframe carrier as claimed in claim 2 wherein said fork arrangement is formed by a V shaped groove.

4. A leadframe carrier as claimed in claim 2 or claim 3 wherein at least some of said intermediate carrier elements each include two of said fork arrangements oriented in opposite directions.

5. A leadframe carrier as claimed in any one of claims 1 to 4 wherein at least some of said carrier elements make electrically insulating contact with one of said first or second leadframes.

6. A leadframe carrier as claimed in claim 5 wherein at least some of said lower carrier elements make electrically insulating contact with first leadframe.

7. A leadframe carrier as claimed in claim 6 wherein all of said lower carrier elements make electrically insulating contact with said first leadframe.

8. A leadframe carrier as claimed in any one of claims 5 to 7 wherein said carrier elements making insulating contact each include a grooved plastics wheel which engages the respective longitudinal edge.

9. A leadframe carrier as claimed in any one of claims 1 to 8 wherein at least some of said intermediate carrier elements engage respective longitudinal edges of both said first and second leadframes.

10. A leadframe carrier as claimed in any one of claims 1 to 9 wherein said carrier elements are mounted on vertically depending members.

11. A leadframe carrier as claimed in claim 10 wherein the weight of at least some of said carrier elements and the corresponding depending members is used to captively retain said leadframes.

12. A leadframe carrier as claimed in any one of claims 1 to 11 wherein said lower carrier elements are fixed in position and said upper and intermediate carrier elements are moved by said clamping means.

THIS SHEET HAS BEEN REPLACED

ABSTRACT

A LEADFRAME CARRIER

A leadframe carrier (10) for transporting leadframes (11, 12) includes lower carrier elements (14), intermediate carrier elements (18, 19) and upper carrier elements (24). The carrier elements (14, 18, 19, 24) include fork arrangements in the form of V-shaped grooves (16, 20, 21, 25) which engage the respective longitudinal edges (17, 22, 23, 26) of the leadframes (11, 12). The carrier elements (14, 18, 19, 24) are arranged in vertically spaced apart linear arrays and the spacing between the linear arrays is closed to engage the carrier grooves (16, 20, 21, 25) with the longitudinal edges (17, 22, 23, 26) to captively retain the leadframes (11, 12) in vertical alignment. At least some of the carrier elements (14, 18, 19, 24) provide electrical connection to one or both of the leadframes (11, 12).

This Sheet Has Been Replaced



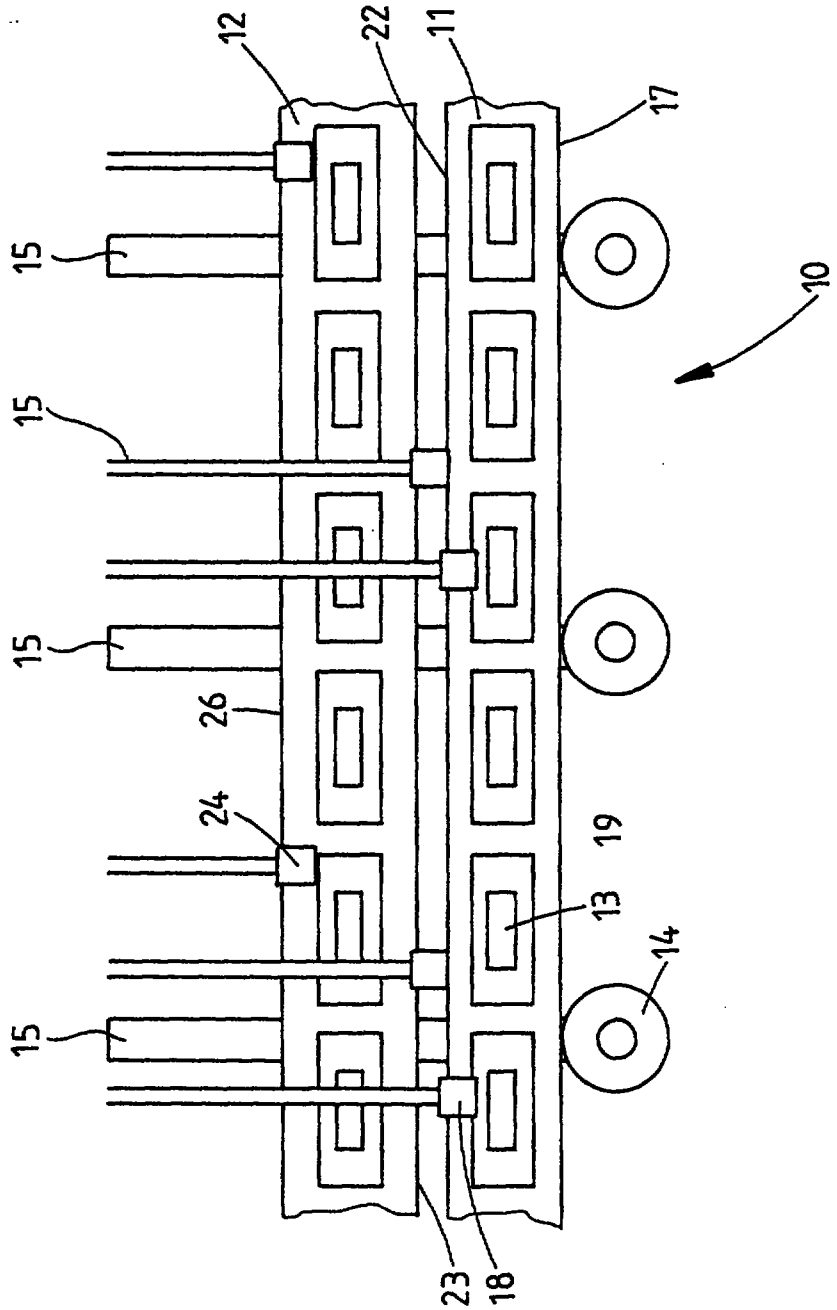

FIG 1

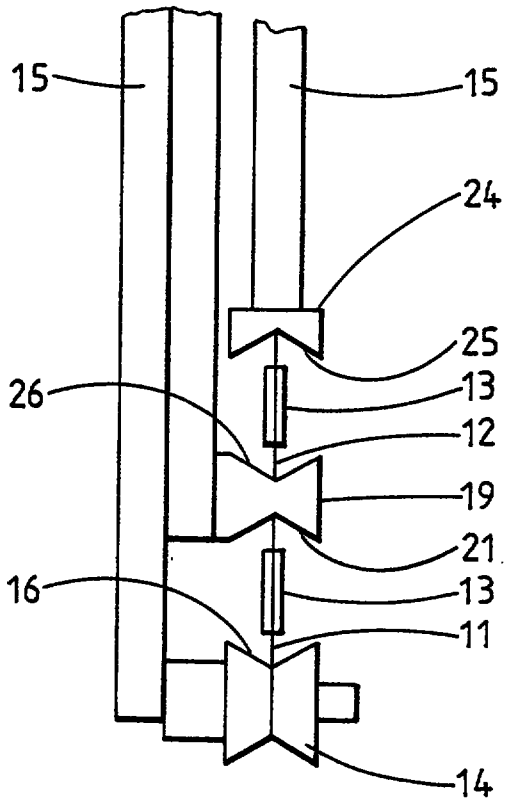

FIG 2

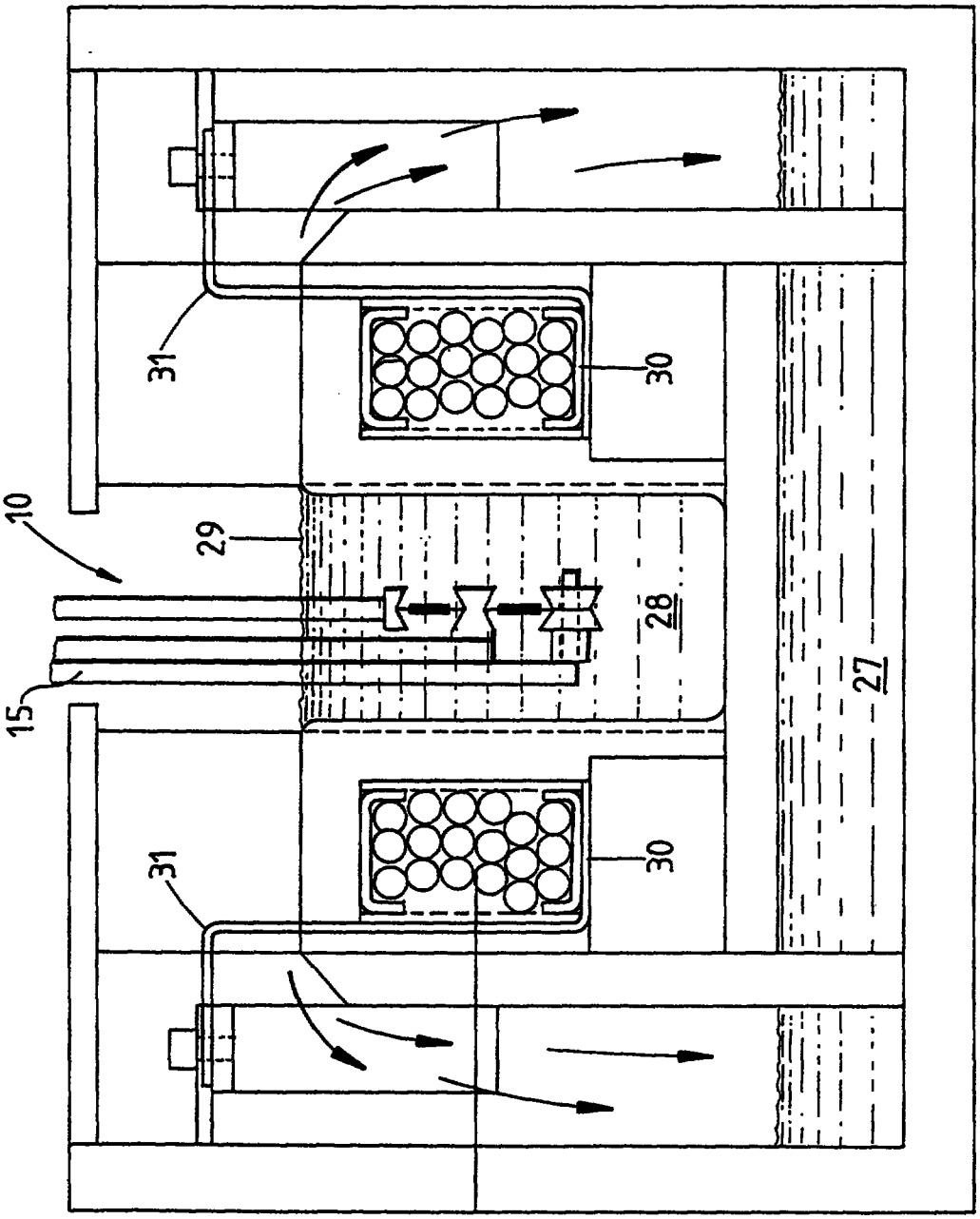

FIG 3

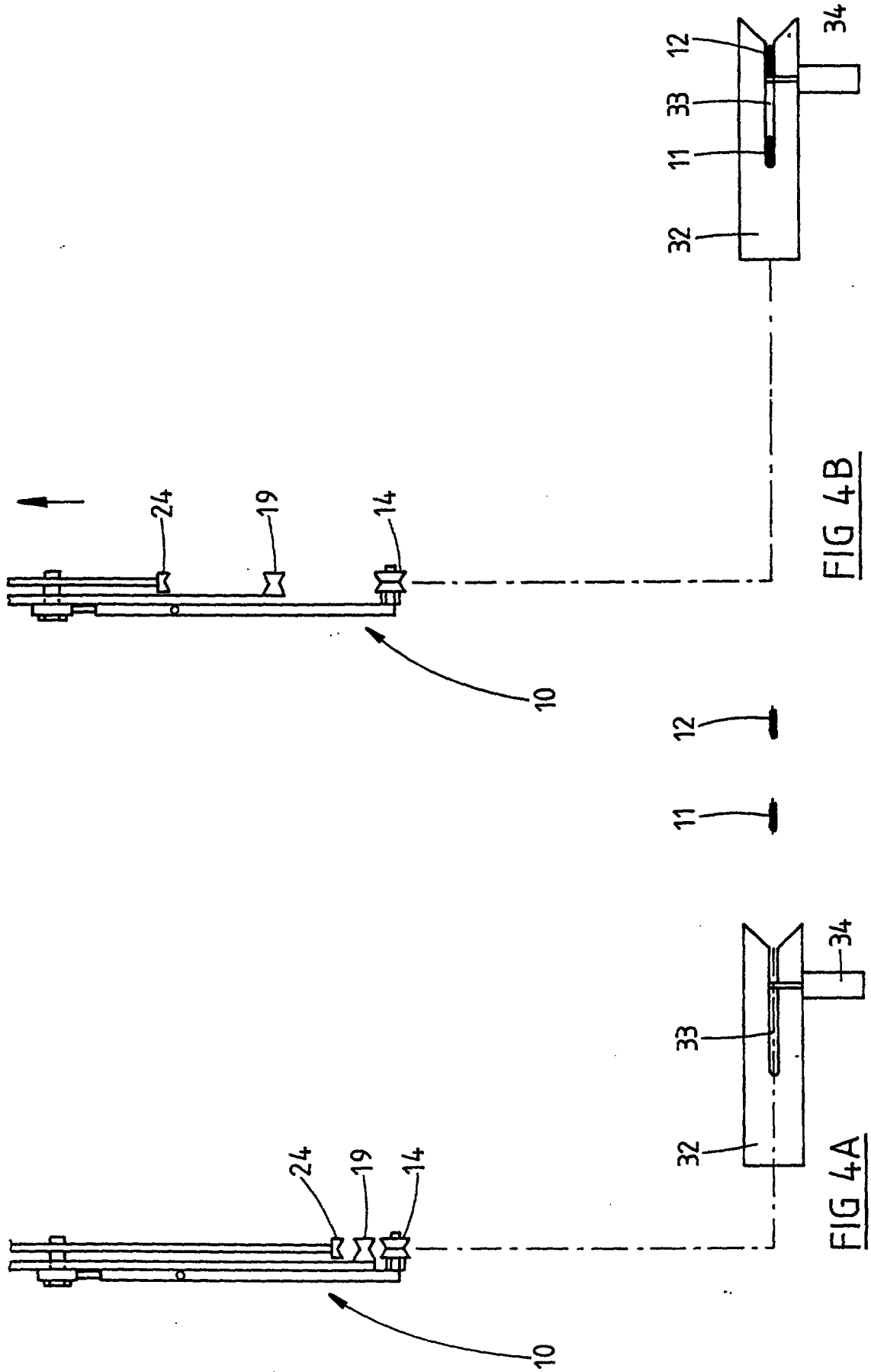

FIG 4B

FIG 4A

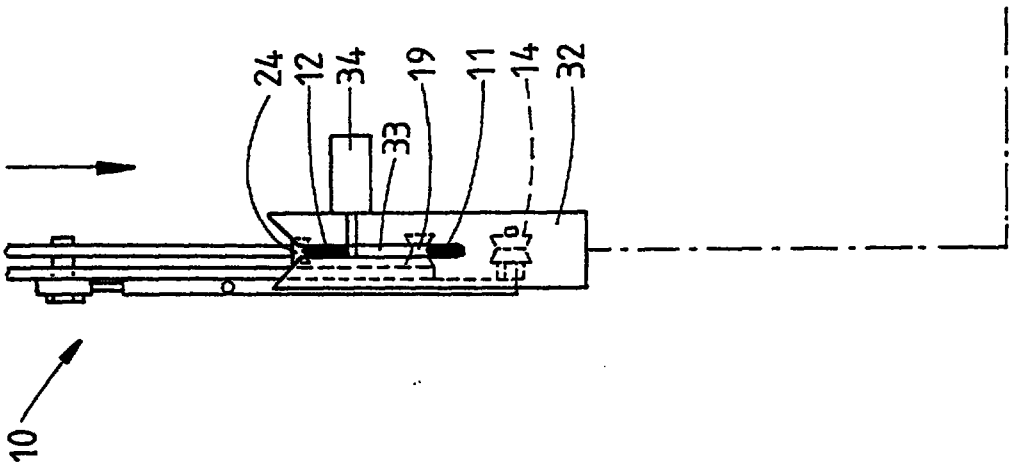

FIG 4D

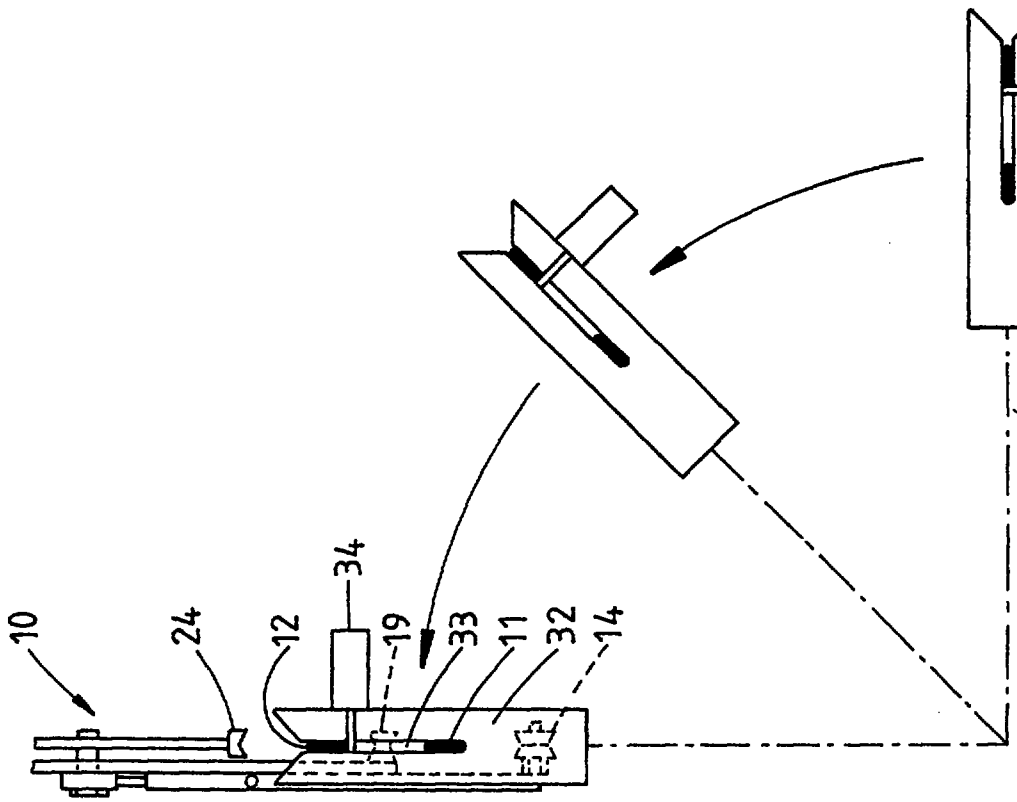

FIG 4C

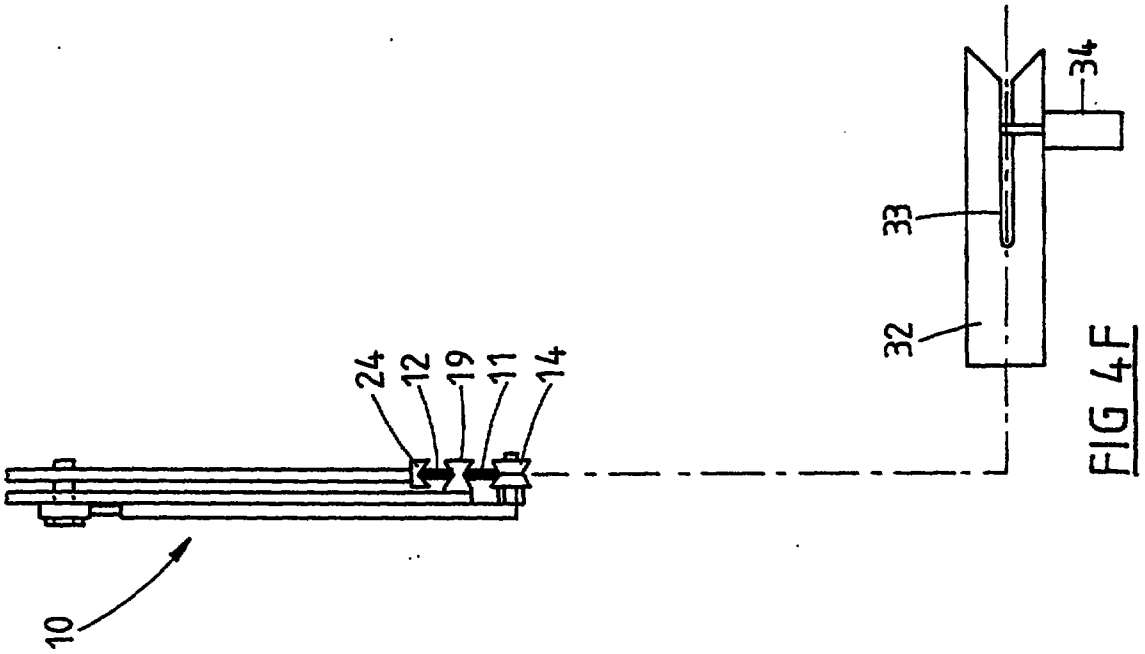

FIG 4F

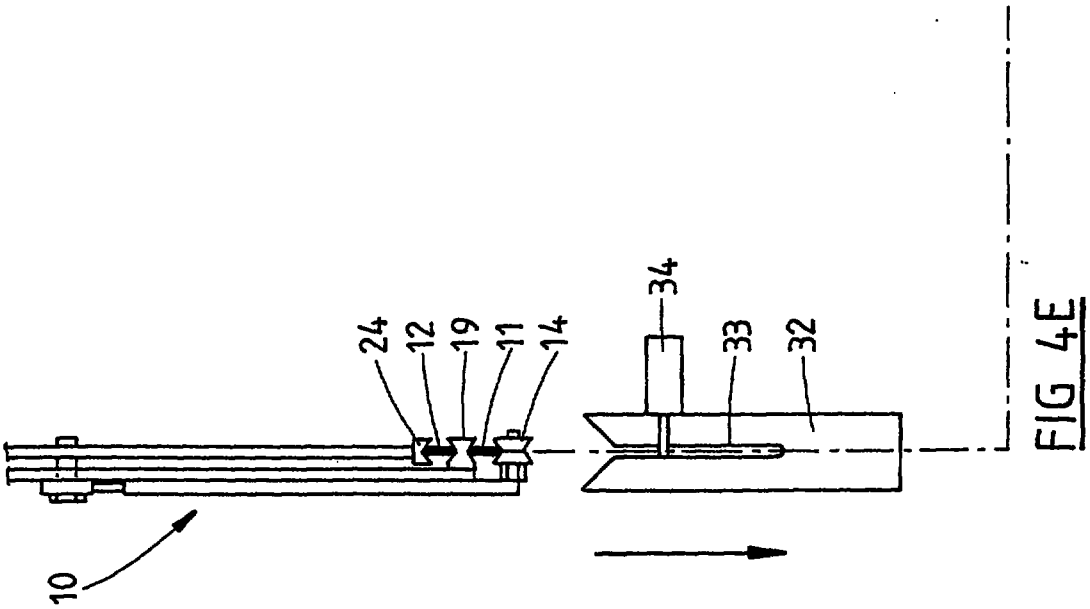

FIG 4E

ABSTRACT

A LEADFRAME CARRIER

A leadframe carrier (10) for transporting leadframes (11, 12) includes lower carrier elements (14), intermediate carrier elements (18, 19) and upper carrier elements (24). The carrier elements (14, 18, 19, 24) include fork arrangements in the form of V-shaped grooves (16, 20, 21, 25) which engage the respective longitudinal edges (17, 22, 23, 26) of the leadframes (11, 12). The carrier elements (14, 18, 19, 24) are arranged in vertically spaced apart linear arrays and the spacing between the linear arrays is closed to engage the carrier grooves (16, 20, 21, 25) with the longitudinal edges (17, 22, 23, 26) to captively retain the leadframes (11, 12) in vertical alignment. At least some of the carrier elements (14, 18, 19, 24) provide electrical connection to one or both of the leadframes (11, 12).

(Fig 1)

REPLACEMENT SHEET
13 AUG 1997